ORDER NO. VSD9512M601

Service Manual

Sec. 1 Operating Instructions
Sec. 2 Disassembly Procedures
Sec. 3 Mechanism
Sec. 4 Electrical Adjustments
Sec. 5 Block Diagrams
Sec. 6 Schematic Diagrams
Sec. 7 Circuit Board Diagrams
Sec. 8 Exploded Views & Replacement Parts List

S-VHS 625 VHS PAL Hi-Fi

Editing Video Cassette Recorder
AG-8700E
Editing Video Cassette Player
AG-8600E

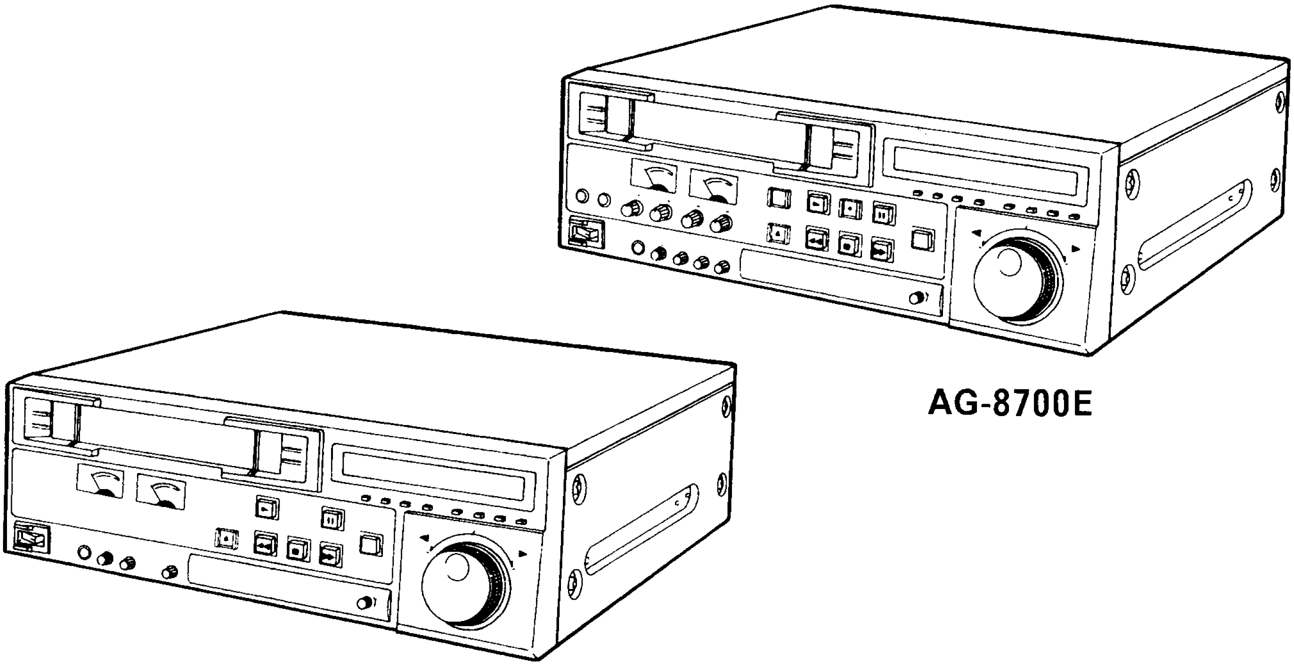

AG-8700E

AG-8600E

Please file and use this Service Manual together with the Service Manual of AG-7700E/7600E (Order No. VSD9502M642)for The Mechanism (Sec. 3), Electrical Adjustment (Sec. 4), Schematic Diagrams(Sec.6) and Circuit Board Diagrams(Sec.7).

Panasonic

© 1995 Matsushita Electric Industrial Co., Ltd. All rights reserved.
Unauthorized copying and distribution is a violation of law.

MC-Service

Specifications

General

Power Supply:	220 – 240 V AC, 50 – 60 Hz
Power Consumption:	AG-8700; 82 W
	AG-8600; 68 W

is the safety information.

Recording System:	2 head-helical scanning, azimuth recording, S-VHS/VHS standards
Tape Speed:	23.39 mm/sec (under normal conditions)
Tape:	S-VHS tape, VHS tape
Recording Time:	180 minutes (with NV-E180)
FF/REW Time:	Approx. 2 minutes (with NV-E180)
Operating Humidity:	35% to 80%
Operating Temperature:	5°C – 40°C (during operation)
Dimensions (W × H × D)	424 × 131.5 × 415 mm
Weight:	About 11.5 kg

Video

Television Format:	PAL TV system;	625 lines, 50 fields
Input/Output:	Line (BNC);	1.0 Vp-p, 75 Ω
(For "Input", AG-8700 only)	S-VIDEO (4P);	Y: 1.0 Vp-p, 75 Ω
		C: 0.3 Vp-p, 75 Ω (burst)
	COMPONENT (BNC);	Y: 1.0 Vp-p, 75 Ω
		P_B: 525 mVp-p, 75 Ω
		P_R: 525 mVp-p, 75 Ω
		(75% Colour Bar without set-up)
Horizontal Resolution:	VHS;	250 lines
	S-VHS;	400 lines
S/N Ratio:	VHS;	45 dB (SC ON, colour mode)
	S-VHS;	46 dB (SC ON, colour mode)

Audio

Input:	Line Hi-Fi (XLR);	+4/0/–6 dBs, hi impedance, balanced
(AG-8700 only)	Line NORM (XLR);	+4/0/–6 dBs, hi impedance, balanced
	MIC;	–50 dBv, 4.7 kΩ, unbalanced
	Time code (BNC);	1.0 Vp-p, 10 kΩ, unbalanced
Output:	Line Hi-Fi (XLR);	+4/0/–6 dBs, 50 Ω, balanced
	Line NORM (XLR);	+4/0/–6 dBs, 50 Ω, balanced
	Headphones (6.3 mm);	–60 dBv ~ –20 dBv, 8 Ω, unbalanced
	Monitor (phono);	0 dBv, 600 Ω unbalanced
	Time code (BNC);	2.4 Vp-p, low impedance, unbalanced
Track Number:	4 tracks (2 normal audio tracks, 2 Hi-Fi audio tracks)	
S/N Ratio:	48 dB (with Dolby NR switch ON, for normal sound)	
Hi-Fi dynamic range:	More than 90 dB	
Audio Frequency Response:	50 Hz to 12 kHz (normal sound)	
	20 Hz to 20 kHz (Hi-Fi sound)	

Weight and dimensions shown are approximate.
Specifications are subject to change without notice.

SERVICE INFORMATION

1 EXTENDERS

1. **EXTENDER BOARD 100P (VFK0941) SAME AS AG-7700 etc.**
   FOR INTERFACE, TBC (1), TBC (2) and VIDEO I/O P.C.BOARDs

2. **EXTENDER CODE 13P (VFK0942) SAME AS AG-7700 etc. × 4**
   FOR REAR AMP (JACK) P.C.BOARD

3. **EXTENDER CODE 40P (VFK0685) SAME AS AG-7350 etc.**
   FOR FRONT P.C.BOARD

4. **EXTENDER BOARD 64P (VFK0829) SAME AS AG-6730 etc.**
   FOR VIDEO YC, AUDIO (1), AUDIO (2) P.C.BOARDs

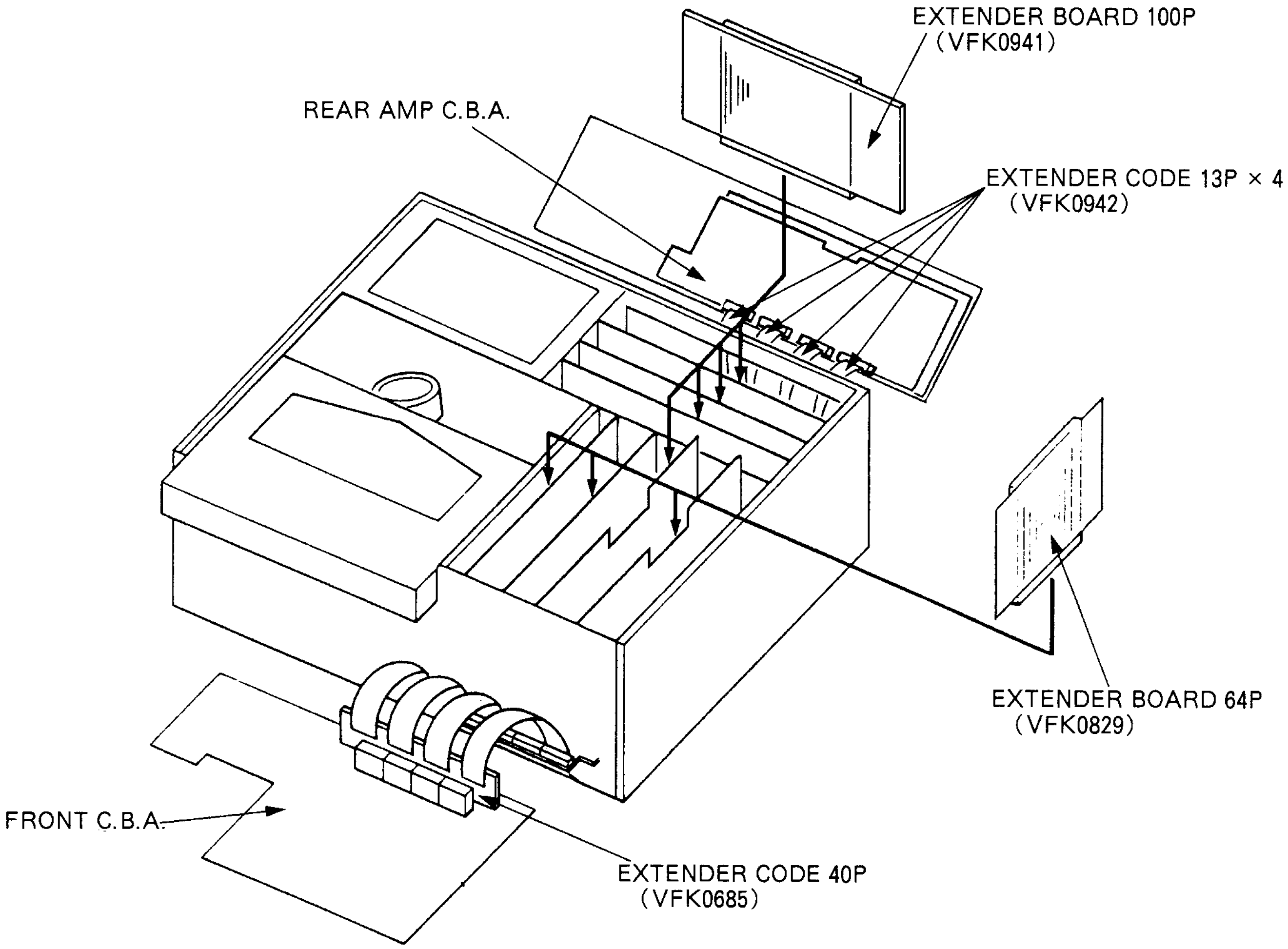

2 CIRCUIT BOARD LAYOUT

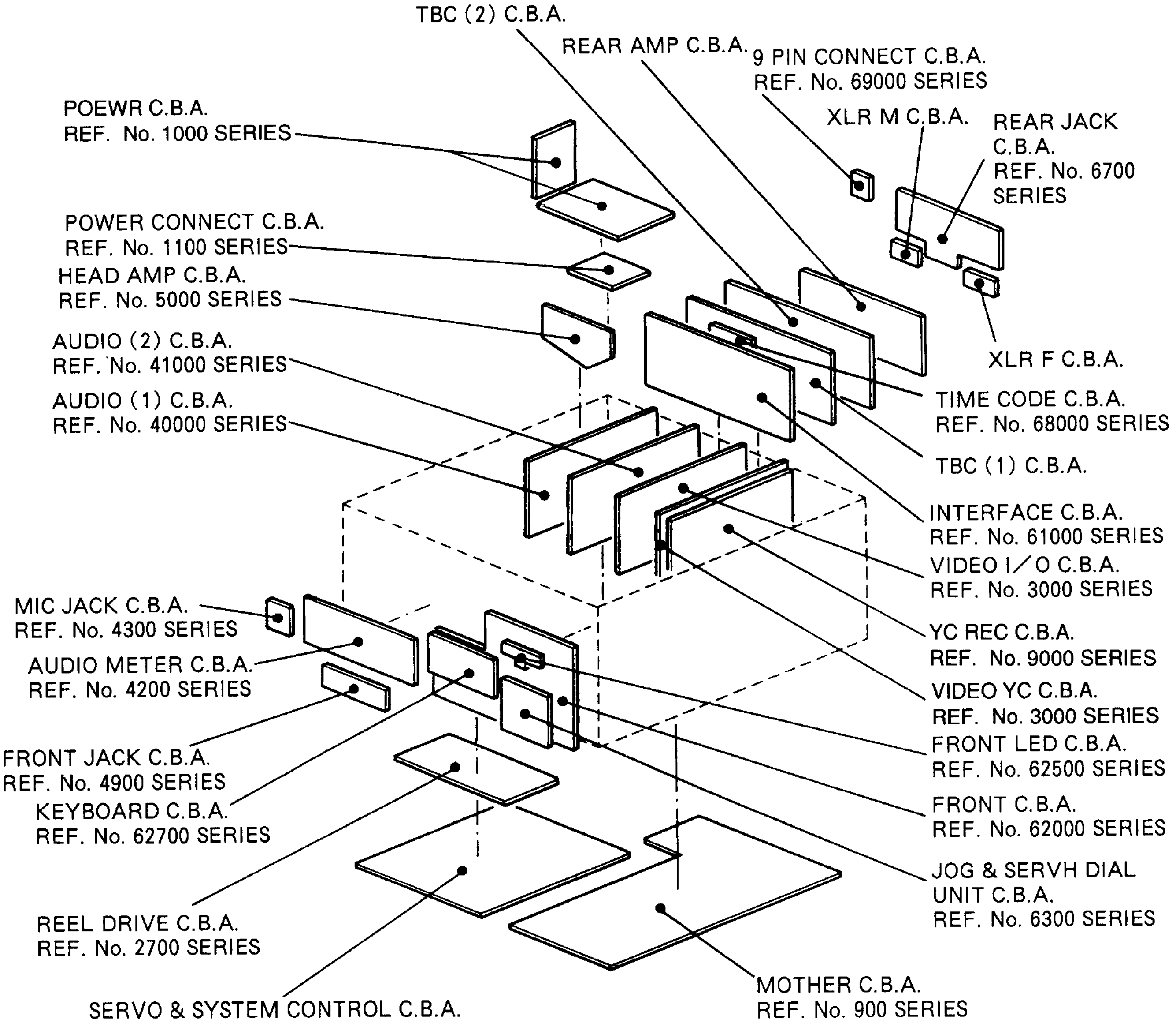

SERVO & SYSTEM CONTROL C.B.A.

REAR AMP AUDIO IN SECTION: REF. No. 1000 SERIES
SUB POWER SECTION: REF. No. 1500 SERIES
CYL SERVO SECTION: REF. No. 2000 SERIES
CAPSTAN SERVO-1 SECTION: REF. No. 2200 SERIES
CAPSTAN SERVO-2 SECTION: REF. No. 2200 SERIES
CTL AMP SECTION: REF. No. 2300 SERIES
WIDE SECTION: REF. No. 2400 SERIES
REEL SERVO SECTION: REF. No. 2500 SERIES
MOTOR DRIVE-1 SECTION: REF. No. 2700 SERIES
MOTOR DRIVE-2 SECTION: REF. No. 2700 SERIES
SYSTEM CONTROL SECTION: REF. No. 60000 SERIES
SUB SYSTEM CONTROL SECTION: REF. No. 60500 SERIES

REAR AMP C.B.A.

REAR AMP SECTION: REF. No. 4000 SERIES
REAR AMP SECTION: REF. No. 6600 SERIES

TBC (1) C.B.A.

Y MEMORY SECTION: REF. No. 8000 SERIES
PB SYNC SEP SECTION: REF. No. 8100 SERIES
WRITE PLL SECTION: REF. No. 8100 SERIES
CLAMP & AMP SECTION: REF. No. 8200 SERIES
C MEMORY SECTION: REF. No. 8300 SERIES
G.A. BLOCK SECTION: REF. No. 8400 SERIES
READ CLK GEN SECTION: REF. No. 8500 SERIES
TBC (1) CONNECTION SECTION: REF. No. 8500 SERIES

TBC (2) C.B.A.

ENCODER SECTION: REF. No.8000 SERIES
SYNC GEN-1 SECTION: REF. No.8600 SERIES
SYNC GEN-2 SECTION: REF. No.8600 SERIES
SYNC GEN-3 SECTION: REF. No.8700 SERIES
TBC (2) CONNECTION SECTION: REF. No.8900 SERIES

3 ROM VERSION DISPLAY

The ROM Version is displayed while the PLAY and RESET buttons are kept depressed as follows;

1. Eject a cassette tape.
2. Set the CONTROL switch to REMOTE.
3. Set the DIAL MODE switch to SEARCH.
4. Push the PLAY button together with RESET button.

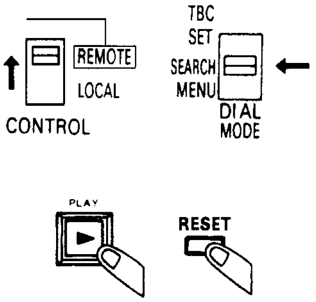

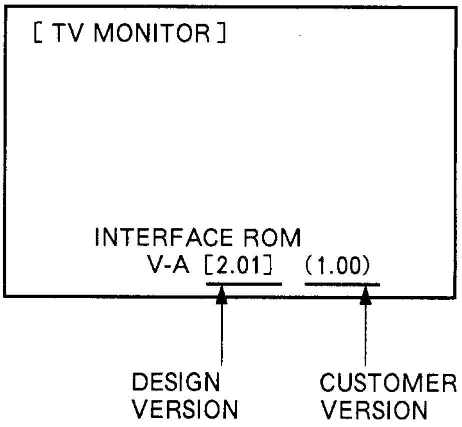

4 HOUR METER RESET

1. Turn off the Power.
2. Connect a jumper wire between TP1 and TP2 on the INTERFACE C.B.A.
3. Set the CONTROL switch to REMOTE.

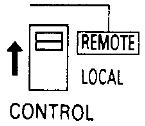

<< DRUM ON TIME >>

Turn on the Power while the STOP and FF buttons are depressed.

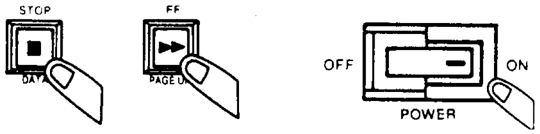

<< CAPSTAN ON TIME >>

Turn on the Power while the STOP and REW buttons are depressed.

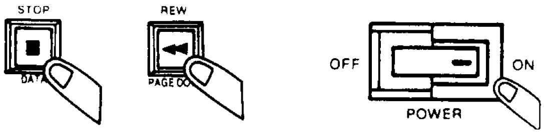

MC-Service

5 INTERNAL SWITCH

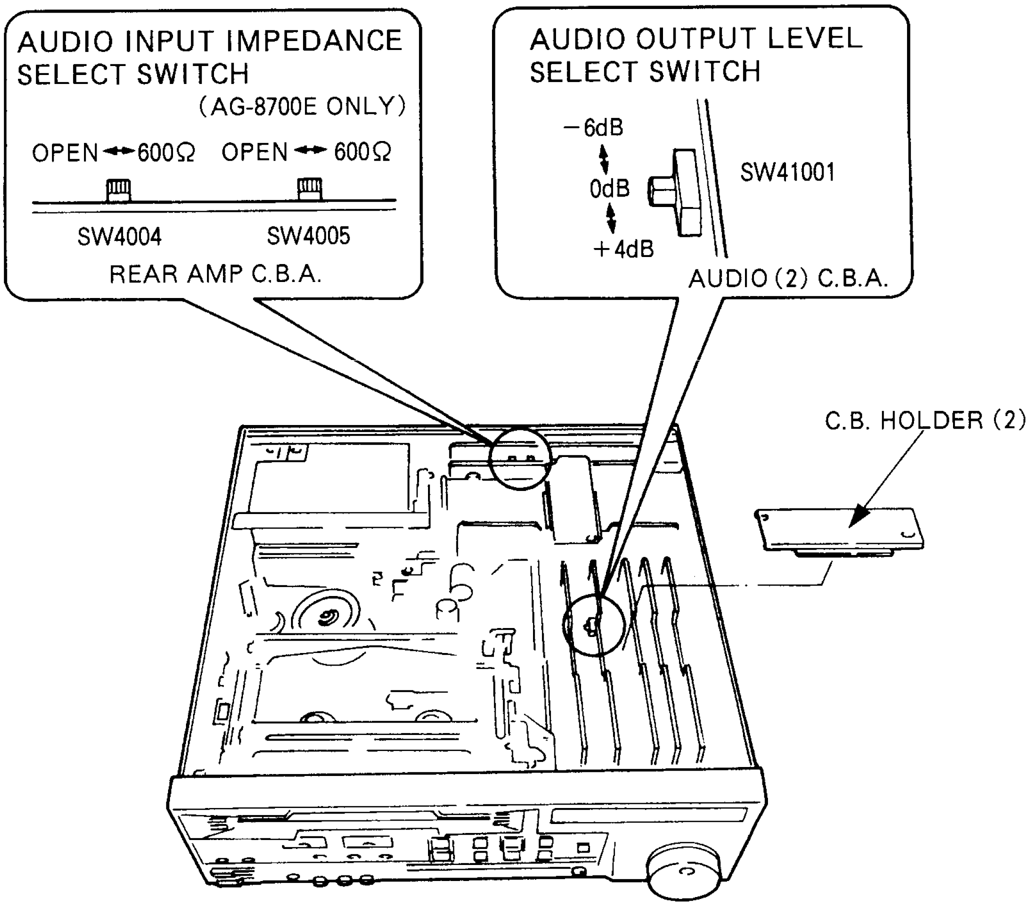

3-1. PARTS LOCATION

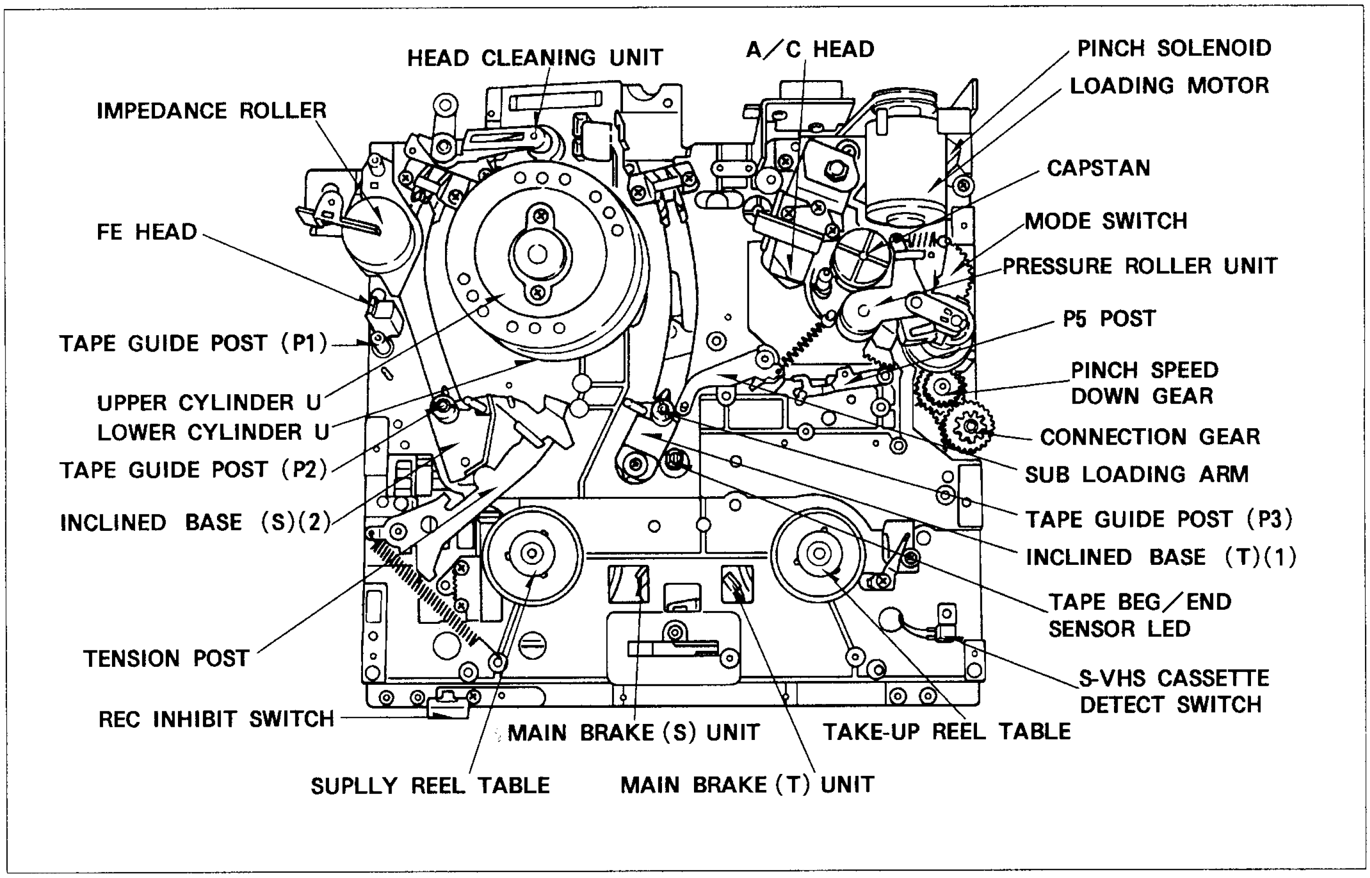

Figure M1

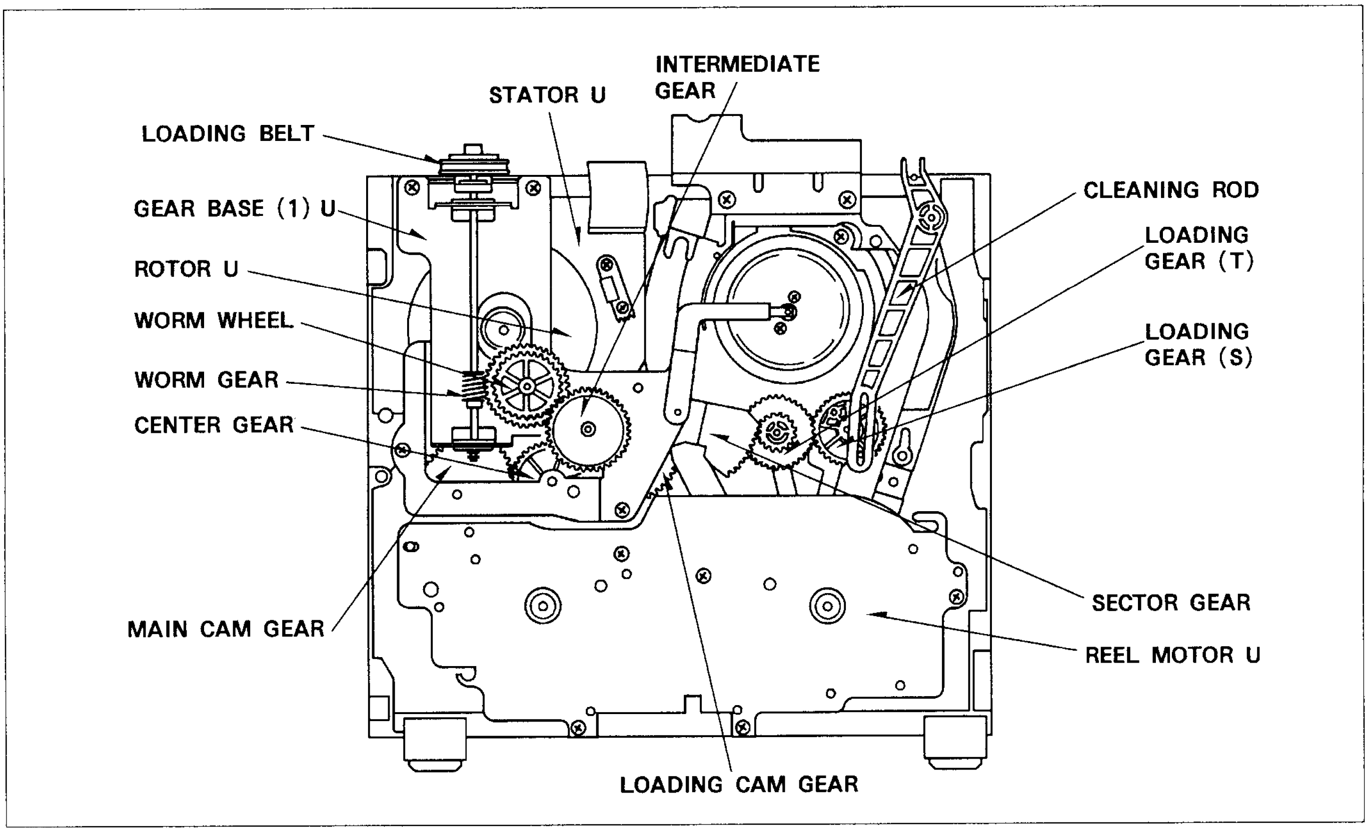

Figure M2

3-2. SERVICING FIXTURES AND TOOLS

The specified servicing fixture must be used to conduct adjustment.
The folloeing fixtures, tools and measuring equipments are required to conduct complete Mechanical Adjustments.

VFM8180HADH ; VHS Alignment Tape 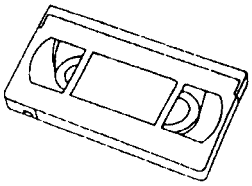	VFK1012 ; Post Adjustment Plate 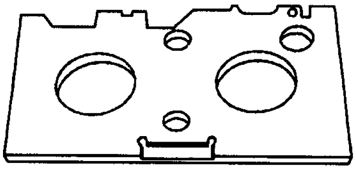	VFK0335 ; Retaining Ring Remover 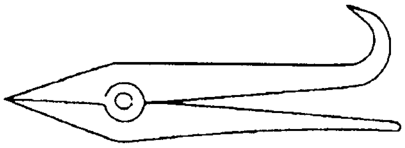
VFK0329 ; Post Adj. Screwdriver 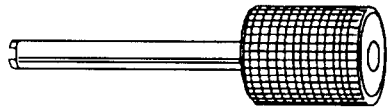	VFK0328 ; H-Position Adj. Screwdriver 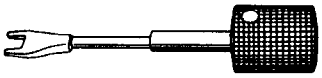	VFK0330 ; Fine Adj. Screwdriver (3mm) 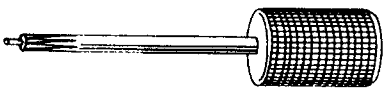
VFK0132 ; Back Tension Meter (Tentelometer, Made in U.S.A) 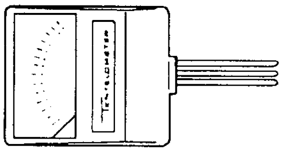	VFK0190 ; Reel Table Height Fixture 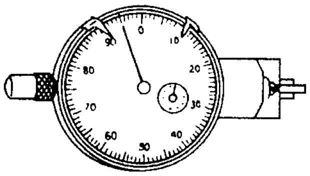	VFK0950 ; Centering Fixture 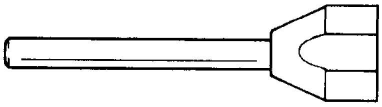
VFK0133 ; Dial Torque Gauge VFK0180 ; Plastic Clamper Only 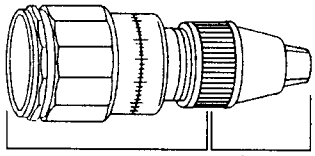	VFK0134 ; Adaptor for VFK0133 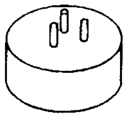	VFK0326 ; Hex. Wrench Set (0.7, 0.9, 1.2, 1.5, 1.6, 2, 2.4, 3 mm) 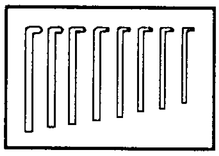
VFK0236 ; Tension Post Adj. Plate 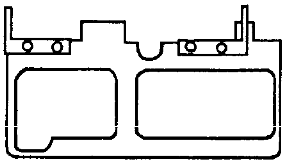	VFK0806 ; Tension Sensor Adj. Fixture 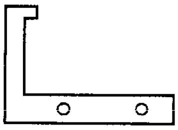	VFK27 ; Head Cleaning Stick 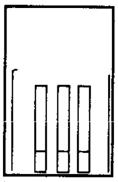
VFK0269 ; L Type Screwdriver	VFK0948 ; Check Light 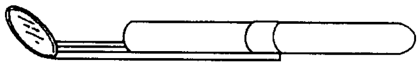	VFK66 ; Fan Type Tension Gauge 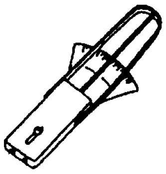
VFK0680 ; S.C.R. Grease (White) (for plastic part) 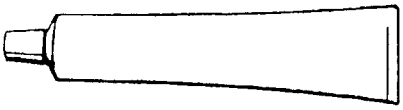	MOR265 ; Morlytone Grease (Black) (for metal part) 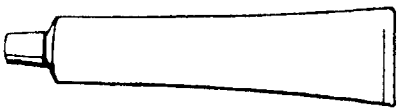	VFK0906 ; High Quality Oil (for Capstan shaft and P5 Post) Cleaning Liquid (Alchol) (Tape Transport Rubber Parts etc.) << PURCHASE LOCALLY >>

3-3. HOW TO EJECT MANUALLY

If the electrical circuit is defective and the action of unloading and front unloading don't work properly, it is possible to eject manually as follows.

1. Take out the Main AC.
2. Release the direction as shown in Figure M3.
3. Release the Wormshaft to clockwise unit cassette is ejected.

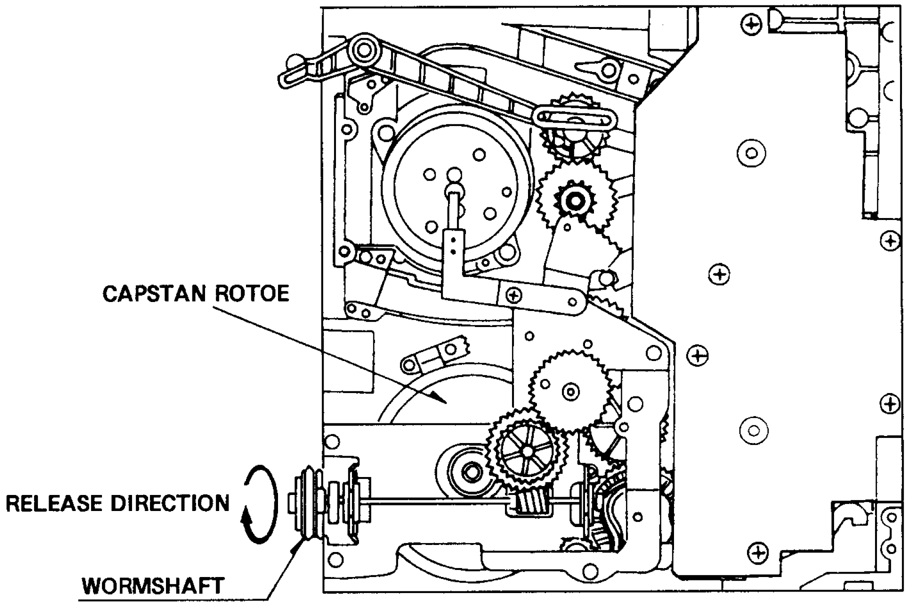

Figure M3 How to Eject Manually

3-4. MAINTENANCE PROCEDURES

3-4-1. REGULAR MAINTENANCE

The purpose of periodic maintenance is to preserve the functioning of this machine throughout its useful life. The user or service dealer should perform these maintenance regularly to ensure that maximum utility is obtained from the machine.

The VCR is a complicated place of equipment. It contains many belts, rollers, heads etc., which become worn, and deterlorate as time goes by, causing trouble. Dust and dirt will also impede the proper functioning of the machine. In light of this, it is very important that overall maintenance be done according to the maintenance chart to maintain the functions of the VCR, and to avoid accidental problems. This maintenance should also be performed after any repairs are done on the equipment.
The VCR used for business applications requires particular attention for several reasons. The installation conditions and applications are not always the best. Long use times, or poor environmental conditions may adversely affect the lifespan and performance of the machine. Regular maintenance assures that the purchaser obtains the maximum value for his expenditure. Accordingly, the necessity of regular maintenance should be fully explained at the time of sale, as well as during after-sale repairs.

3-4-2. MAINTENANCE CHART

The following periodic maintenance is required to prolong the life of the machine.

Ref. No. IN P/L	Parts Name	Hour									
		500	1000	1500	2000	2500	3000	3500	4000	4500	5000
	Tape Transporter	●	●	●	●	●	●	●	●	●	●
1-7	Loading Motor U								◎		
1-19	A/C Head U	●	●	●	●	●	●	●	◎	●	●
1-25	Pressure Roller U	●	●	●	◎	●	●	●	◎	●	●
1-36	Mode Switch								◎		
1-39	P5 Arm U								▲		
1-41	Upper Cylinder	●	◎	●	◎	●	◎	●	◎	●	◎
1-42	Lower Cylinder U	●	●	●	●	●	●	●	◎	●	●
1-45	Inclined (T) U								▲		◎
1-48	Inclined (S) U								▲		◎
1-56	FE Head	●	●	●	●	●	●	●	◎	●	●
1-66	Head Cleaning U		◎		◎		◎		◎		◎

Ref. No. IN P/L	Parts Name	Hour									
		500	1000	1500	2000	2500	3000	3500	4000	4500	5000
2-1	Worm Shaft								▲		
2-2	Loading Belt				◎				◎		
2-3	Worm Wheel								×		
2-8	Stator Base Unit								◎		
2-16	Main Brake (S)				◎				◎		
2-18	Main Brake (T)				◎				◎		
2-23	Takeup Reel Tuble U								◎		
2-24	Supply Reel Table U								◎		
2-28	Capstan Rotor U	●	●	●	△	●	●	●	△	●	●
2-33	Main Cam Gear								▲		
2-39	Loading Cam Gear								▲		

*NOTE :

Symbol	Maintenance	Requirement	Remark
●	Cleaning	Ethyl-alcohol or Cleaning Liquid (Purchase locally)	Wipe dirt from the parts using soft cloth impregnated with Ethyl-Alcohol. Note: When cleaning rubber parts, avoid using excessive alcohol since it may accelerate deterioration of these parts. After cleaning with alcohol, wipe the alcohol quickly and thoroughly.
◎	Replacement		
△	Lubrication	High Quality Spindle Oil (Purchase locally)	Supply one or two drops of oil.
▲	Greasing	Molytone Grease (MOR265)	Wipe the old grease and apply new grease.
×	Greasing	S.C.R. Grease (VFK0680)	Wipe the old grease and apply new grease.

4-1. TEST & SERVICE EQUIPMENT

No.	EQUIPMENT	CAPACITY
1	D.V.M. (Digital Volt Meter)	0.001 to 50V
2	Dual-Trace Oscilloscope (with Probes)	0.005 to 50V/div, DC to 100MHz (50MHz)
3	Frequency Counter	0 to 10MHz
4	Sinewave Signal Generator (RC Oscillator)	0 to 10MHz
5	Video Sweep Generator	0 to 10MHz
6	Waveform Monitor	
7	Video Signal Generator (Composite, Y/C)	video signal with 7.5% set-up
8	Spectrum Analyzer	
9	Vector Scope	
10	Component Vector Scope	
11	SCH Meter	
12	Color Monitor TV	
13	VHS Alignment Tape (VFM8080HQFP)	
14	Extender Board (VFK0941)	

4-2. HOW TO READ THE ADJUSTMENT PROCEDURES TABLE

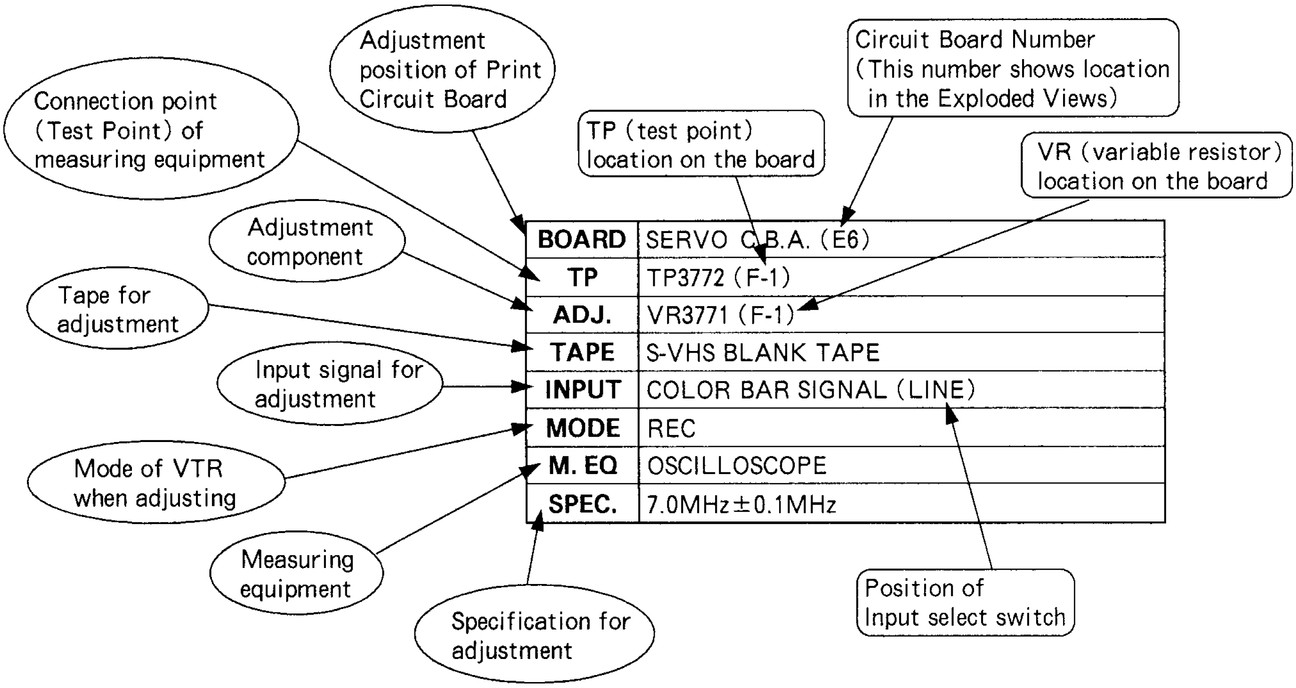

ELECTRICAL ADJUSTMENT PROCEDURES COMPARISON CHART

The following table show the comparison of adjustment procedures between AG-7700, AG-8700 and AG-8600.
The adjustment procedures in this manual are described only for the TBC section.
Please refer to the Service manual for AG-7700 for other sections, according to the following Comparison charts.

4-3 SERVO SECTION

No.	ADJ. No	ADJ.ITEM	MODE No.			REMARKS
			AG-7700	AG-8700	AG-8600	
1	4-3-1	PG Shifter Adj.	S/M Page 4-4	Refer to AG-7700 S/M	Refer to AG-7700 S/M	
2	4-3-2	Tracking Fix Adj.	S/M Page 4-4	Refer to AG-7700 S/M	Refer to AG-7700 S/M	

4-4 VIDEO REC SECTION

No.	ADJ. No	ADJ.ITEM	MODE No.			REMARKS
			AG-7700	AG-8700	AG-8600	
3	4-4-1	Peak Adj.	S/M Page 4-4	Refer to AG-7700 S/M	Refer to AG-7700 S/M	<SET UP> TBC : OFF DNR : OFF
4	4-4-2	Supper Limiter Adj.	S/M Page 4-5	Refer to AG-7700 S/M	Refer to AG-7700 S/M	<SET UP> TBC : OFF DNR : OFF
5	4-4-3	FSC Adj.	S/M Page 4-5	Refer to AG-7700 S/M	Refer to AG-7700 S/M	<SET UP> TBC : OFF DNR : OFF
6	4-4-4	VCO Adj.	S/M Page 4-6	Refer to AG-7700 S/M	Refer to AG-7700 S/M	<SET UP> TBC : OFF DNR : OFF
7	4-4-5	Pilot Burst Adj. (AG-8700only)	S/M Page 4-6	Refer to AG-7700 S/M	----	<SET UP> TBC : OFF DNR : OFF
8	4-4-6	Composite Level Adj. (AG-8700only)	S/M Page 4-6	Refer to AG-7700 S/M	----	<SET UP> TBC : OFF DNR : OFF
9	4-4-7	EE Y Level Adj Adj. (AG-8700only)	S/M Page 4-7	Refer to AG-7700 S/M	----	<SET UP> TBC : OFF DNR : OFF
10	4-4-8	Rec Sub Emphasis Input Adj. (AG-8700only)	S/M Page 4-7	Refer to AG-7700 S/M	----	<SET UP> TBC : OFF DNR : OFF
11	4-4-9	S-VHS Deviation Adj. (AG-8700only)	S/M Page 4-7	Refer to AG-7700 S/M	----	<SET UP> TBC : OFF DNR : OFF
12	4-4-10	VHS Deviation Adj. (AG-8700only)	S/M Page 4-8	Refer to AG-7700 S/M	----	<SET UP> TBC : OFF DNR : OFF
13	4-4-11	S-VHS White Clip & Dark Clip Adj. (AG-8700only)	S/M Page 4-8	Refer to AG-7700 S/M	----	<SET UP> TBC : OFF DNR : OFF
14	4-4-12	Video Meter Adj. (AG-8700only)	S/M Page 4-9	Refer to AG-7700 S/M	----	<SET UP> TBC : OFF DNR : OFF
15	4-4-13	Chroma Rec Current Adj. (AG-8700only)	S/M Page 4-9	Refer to AG-7700 S/M	----	<SET UP> TBC : OFF DNR : OFF
16	4-4-14	S-VHS Y Rec Current Adj. (AG-8700only)	S/M Page 4-9	Refer to AG-7700 S/M	----	<SET UP> TBC : OFF DNR : OFF
17	4-4-15	VHS Y Rec Current Adj. (AG-8700only)	S/M Page 4-10	Refer to AG-7700 S/M	----	<SET UP> TBC : OFF DNR : OFF

4-5 VIDEO PB SECTION

No.	ADJ. No	ADJ.ITEM	MODE No.			REMARKS
			AG-7700	AG-8700	AG-8600	
18	4-5-1	PB Sub Emphasis Input Level Adj.	S/M Page 4-10	Refer to AG-7700 S/M	Refer to AG-7700 S/M	<SET UP> TBC : OFF DNR : OFF
19	4-5-2	S-VHS PB Y Level Adj.	S/M Page 4-11	Refer to AG-7700 S/M	Refer to AG-7700 S/M	<SET UP> TBC : OFF DNR : OFF
20	4-5-3	VHS PB Y Level Adj.	S/M Page 4-11	Refer to AG-7700 S/M	Refer to AG-7700 S/M	<SET UP> TBC : OFF DNR : OFF
21	4-5-4	Normal Y Level Adj.	S/M Page 4-12	Refer to AG-7700 S/M	Refer to AG-7700 S/M	<SET UP> TBC : OFF DNR : OFF
22	4-5-5	Drop Out Adj.	S/M Page 4-12	Refer to AG-7700 S/M	Refer to AG-7700 S/M	SPEC : MINIMUM → MINIMUM (less than 80m Vp-p) <SET UP> TBC : OFF DNR : OFF
23	4-5-6	Video Tracking Meter Adj.	S/M Page 4-12	Refer to AG-7700 S/M	Refer to AG-7700 S/M	<SET UP> TBC : OFF DNR : OFF
24	4-5-7	PB Output Y Level Adj.	S/M Page 4-13	Refer to AG-7700 S/M	Refer to AG-7700 S/M	<SET UP> TBC : OFF DNR : OFF
25	4-5-8	S-VHS PB Frequency Response Adj.	S/M Page 4-14	Refer to AG-7700 S/M	Refer to AG-7700 S/M	<SET UP> TBC : OFF DNR : OFF
26	4-5-9	S-VHS SS Frequency Response Adj.	S/M Page 4-14	Refer to AG-7700 S/M	Refer to AG-7700 S/M	<SET UP> TBC : OFF DNR : OFF
27	4-5-10	VHS PB Frequency Response Adj.	S/M Page 4-15	Refer to AG-7700 S/M	Refer to AG-7700 S/M	<SET UP> TBC : OFF DNR : OFF
28	4-5-11	CNR Y Balance Adj.	S/M Page 4-16	Refer to AG-7700 S/M	Refer to AG-7700 S/M	SPEC: "A" = less than 50mVp-p → "A" = less than 80mVp-p <SET UP> TBC : OFF DNR : OFF
29	4-5-12	CNR Adj.	S/M Page 4-16	Refer to AG-7700 S/M	Refer to AG-7700 S/M	SPEC : "A" = less than 700mVp-p → "A" = less than 500mVp-p <SET UP> TBC : OFF DNR : OFF
30	4-5-13	CAC White Balance Adj.	S/M Page 4-17	Refer to AG-7700 S/M	Refer to AG-7700 S/M	<SET UP> TBC : OFF DNR : OFF
31	4-5-14	EE Chroma Level Adj. (AG-8700only)	S/M Page 4-17	Refer to AG-7700 S/M	----	<SET UP> TBC : OFF DNR : OFF
32	4-5-15	VV Chroma Level Adj.	S/M Page 4-18	Refer to AG-7700 S/M	Refer to AG-7700 S/M	<SET UP> TBC : OFF DNR : OFF
33	4-5-16	CAC Level Adj.	S/M Page 4-18	Refer to AG-7700 S/M	Refer to AG-7700 S/M	<SET UP> TBC : OFF DNR : OFF
34	4-5-17	VV Burst Error Adj.	S/M Page 4-19	Refer to AG-7700 S/M	Refer to AG-7700 S/M	<SET UP> TBC : OFF DNR : OFF
35	4-5-18	Burst Level Adj.	S/M Page 4-20	Refer to AG-7700 S/M	Refer to AG-7700 S/M	<SET UP> TBC : OFF DNR : OFF
36	4-5-19	PB S-VHS EDIT Y/C Delay Adj.	S/M Page 4-20	Refer to AG-7700 S/M	Refer to AG-7700 S/M	SPEC : On sec ± 30nsec →A=B±2% (Refer to Fig.E35) <SET UP> TBC : OFF DNR : OFF

No.	ADJ. No	ADJ.ITEM	MODE No.			REMARKS
			AG-7700	AG-8700	AG-8600	
37	4-5-20	PB VHS EDIT Y/C Delay Adj.	S/M Page 4-21	Refer to AG-7700 S/M	Refer to AG-7700 S/M	SPEC : On sec ± 30nsec →A=B±2% (Refer to Fig.E35) <SET UP> TBC : OFF DNR : OFF
38	4-5-21	CAC Y/C Delay Adj.	S/M Page 4-22	Refer to AG-7700 S/M	Refer to AG-7700 S/M	<SET UP> TBC : OFF DNR : OFF
39	4-5-22	S-VHS Rec Delay Adj. (AG-8700only)	S/M Page 4-22	Refer to AG-7700 S/M	----	<SET UP> TBC : OFF DNR : OFF
40	4-5-23	VHS Rec Delay Adj. (AG-8700only)	S/M Page 4-23	Refer to AG-7700 S/M	----	<SET UP> TBC : OFF DNR : OFF
41	4-5-24	Artificial V-sync Adj.	S/M Page 4-24	Refer to AG-7700 S/M	Refer to AG-7700 S/M	<SET UP> TBC : OFF DNR : OFF

4-6 AUDIO SECTION

No.	ADJ. No	ADJ.ITEM	MODE No.			REMARKS
			AG-7700	AG-8700	AG-8600	
42	4-6-1	Normal Audio Input Level Adj. (AG-8700only)	S/M Page 4-24	Refer to AG-7700 S/M	----	
43	4-6-2	Hi-Fi Audio Input Level Adj. (AG-8700only)	S/M Page 4-24	Refer to AG-7700 S/M	----	
44	4-6-3	Audio Jack Output Balance Adj.	S/M Page 4-24	Refer to AG-7700 S/M	Refer to AG-7700 S/M	
45	4-6-4	Audio Level Meter Adj.	S/M Page 4-25	Refer to AG-7700 S/M	Refer to AG-7700 S/M	
46	4-6-5	Normal Audio PB Frequency Response Adj.	S/M Page 4-26	Refer to AG-7700 S/M	Refer to AG-7700 S/M	
47	4-6-6	Normal Audio PB Gain Adj. (AG-8700only)	S/M Page 4-26	Refer to AG-7700 S/M	----	
48	4-6-7	Normal Audio Erase Current Adj.	S/M Page 4-27	Refer to AG-7700 S/M	----	
49	4-6-8	Normal Audio Bias Current Adj. (AG-8700only)	S/M Page 4-27	Refer to AG-7700 S/M	----	SPEC : S-VHS : 6.7 ± 0.1m Vrms → S-VHS : 6.7 ± 0.5m Vrms VHS : 5.0 ± 0.1m Vrms → VHS : 5.0 ± 0.5m Vrms
50	4-6-9	Normal Audio Rec Current Adj. (AG-8700only)	S/M Page 4-28	Refer to AG-7700 S/M	----	
51	4-6-10	Normal Audio Time Code	S/M Page 4-28	Refer to AG-7700 S/M	Refer to AG-7700 S/M	
52	4-6-11	Hi-Fi Audio Head Switching Shifter Adj.	S/M Page 4-29	Refer to AG-7700 S/M	Refer to AG-7700 S/M	
53	4-6-12	Hi-Fi Audio Carrier Frequency Adj.	S/M Page 4-29	Refer to AG-7700 S/M	Refer to AG-7700 S/M	
54	4-6-13	Hi-Fi Audio Deviation Adj. (AG-8700only)	S/M Page 4-30	Refer to AG-7700 S/M	----	
55	4-6-14	Hi-Fi Audio Rec Current Adj. (AG-8700only)	S/M Page 4-30	Refer to AG-7700 S/M	----	
56	4-6-15	Normal Audio Output Level Adj. (AG-8600only)	S/M Page 4-30	----	Refer to AG-7700 S/M	

MC-Service

4-7 OTHER SECTION

No.	ADJ. No	ADJ.ITEM	MODE No.			REMARKS
			AG-7700	AG-8700	AG-8600	
57	4-7-1	VITC Mute Pulse Adj. (AG-8700only)	S/M Page 4-31	Refer to AG-7700 S/M	----	≪SET UP≫ TBC : OFF DNR : OFF
58	4-7-2	OSD Character Width Adj.	S/M Page 4-31	Refer to AG-7700 S/M	Refer to AG-7700 S/M	≪SET UP≫ TBC : OFF DNR : OFF
59	4-7-3	Flying Erase Current Adj. (AG-8700only)	S/M Page 4-32	Refer to AG-7700 S/M	----	≪SET UP≫ TBC : OFF DNR : OFF

4-8. TBC SECTION

4-8-1. Y A/D INPUT (1) ADJ.

A. FOR AG-8700

BOARD	TBC (1) C.B.A. (E11)
TP	TP8201 (B-1)
ADJ.	VR8202 (B-1)
TAPE	
INPUT	COLOR BAR SIGNAL (LINE)
MODE	EJECT (E-E)
M. EQ	OSCILLOSCOPE
SPEC.	1.5V ± 0.05V

≪ SET UP ≫
VIDEO MODE : COLOR (MENU NO.2002)
PB/EE SELECT : EE (MENU NO.2004)
TBC SW : ON
INPUT SW : LINE

1. Connect the oscilloscope to TP8201.
2. Adjust VR8202 so that the level becomes 1.5V ± 0.05V as shown in Figure E1.

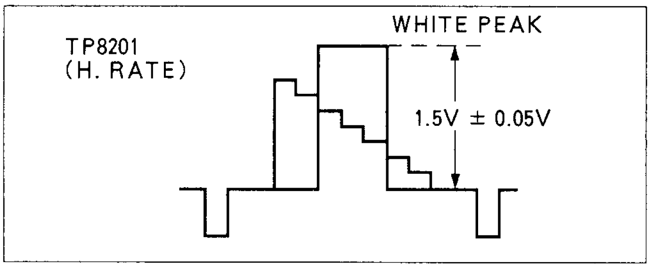

Figure E1

B. FOR AG-8600

BOARD	TBC (1) C.B.A. (E11)
TP	TP8201 (B-1)
ADJ.	VR8202 (B-1)
TAPE	C.B. OTHER RECORDED TAPE (S-VHS)
INPUT	
MODE	PLAYBACK
M. EQ	OSCILLOSCOPE
SPEC.	1.5V ± 0.05V

≪ SET UP ≫
IMAGE MODE SELECT : EDIT (MENU NO.2001)
VIDEO MODE : COLOR (MENU NO.2002)
TBC SW : ON

1. Play back the color bar signal recorded by other recorder in the S-VHS mode.
2. Connect the oscilloscope to TP8201.
3. Adjust VR8202 so that the level becomes 1.5V ± 0.05V as shown in Figure E1.

4-8-2. Y A/D INPUT (2) ADJ.

A. FOR AG-8700

BOARD	TBC (1) C.B.A. (E11)
TP	VIDEO OUT
ADJ.	VR8201 (C-1)
TAPE	
INPUT	COLOR BAR SIGNAL (LINE)
MODE	EJECT (E-E)
M. EQ	OSCILLOSCOPE
SPEC.	0 ± 10mV

≪ SET UP ≫
TBC CONTROL : CENTER POSITION (OSD)
VIDEO MODE : COLOR (MENU NO.2002)
PB/EE SELECT : EE (MENU NO.2004)
TBC SW : ON
INPUT SW : LINE

1. Connect the oscilloscope to VIDEO OUT.
2. Adjust VR8201 so that the set-up level becomes 0 ± 10mV as shown in Figure E2.

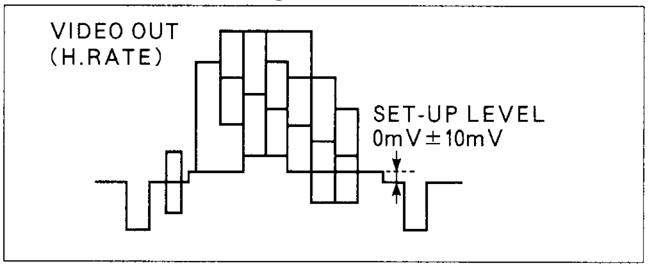

Figure E2

B. FOR AG-8600

BOARD	TBC (1) C.B.A. (E11)
TP	VIDEO OUT
ADJ.	VR8201 (B-1)
TAPE	C.B. OTHER RECORDED TAPE (S-VHS)
INPUT	
MODE	PLAYBACK
M. EQ	OSCILLOSCOPE
SPEC.	0mV ± 10mV

≪ SET UP ≫
TBC CONTROL : CENTER POSITION (OSD)
IMAGE MODE SELECT : EDIT (MENU NO.2001)
VIDEO MODE : COLOR (MENU NO.2002)
TBC SW : ON

1. Play back the color bar signal recorded by other recorder in the S-VHS mode.
2. Connect the oscilloscope to VIDEO OUT.
3. Adjust VR8201 so that the set-up level becomes 0mV ± 10mV as shown in Figure E2.

4-8-3. C A/D INPUT (1) ADJ.

A. FOR AG-8700

BOARD	TBC (1) C.B.A. (E11)
TP	TP8202 (R)(B-1), TP8203 (B)(A-1)
ADJ.	VR8204 (R-Y)(B-1), VR8205 (B-Y)(B-1)
TAPE	
INPUT	COLOR BAR SIGNAL (LINE)
MODE	EJECT (E-E)
M. EQ	OSCILLOSCOPE
SPEC.	A=2.1Vp-p ± 0.05V B=1.5Vp-p ± 0.05V

≪ SET UP ≫
VIDEO MODE : COLOR (MENU NO.2002)
PB/EE SELECT : EE (MENU NO.2004)
TBC SW : ON
INPUT SW : LINE

1. Connect the oscilloscope to TP8202.
2. Adjust VR8204 so that the level becomes 2.1Vp-p ± 0.05Vp-p as shown in Figure E3-A.

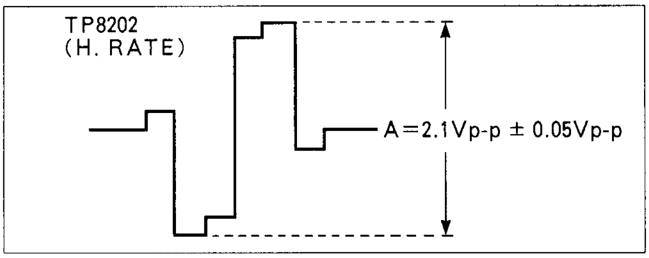

Figure E3-A

3. Connect the oscilloscope to TP8203.
4. Adjust VR8205 so that the level becomes 1.5Vp-p ± 0.05Vp-p as shown in Figure E3-B.

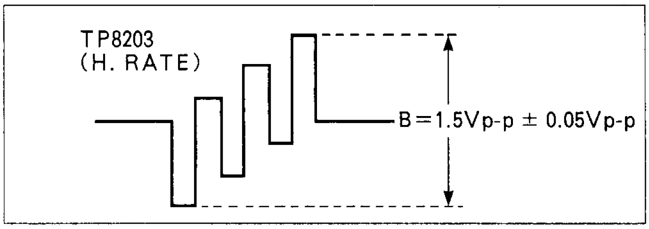

Figure E3-B

B. FOR AG-8600

BOARD	TBC (1) C.B.A. (E11)
TP	TP8202 (R)(B-1), TP8203 (B)(A-1)
ADJ.	VR8204 (R-Y)(A-1), VR8205 (B-Y)(A-1)
TAPE	C.B. OTHER RECORDED TAPE
INPUT	
MODE	PLAY BACK
M. EQ	OSCILLOSCOPE
SPEC.	A=2.1Vp-p ± 0.05V B=1.5Vp-p ± 0.05V

≪ SET UP ≫
IMAGE MODE SELECT : EDIT (MENU NO.2001)
VIDEO MODE : COLOR (MENU NO.2002)
TBC SW : ON

1. Play back the color bar signal recorded by other recorder in the S-VHS mode.
2. Connect the oscilloscope to TP8202.
3. Adjust VR8204 so that the level becomes 2.1Vp-p ± 0.05Vp-p as shown in Figure E3-A.
4. Connect the oscilloscope to TP8203.
5. Adjust VR8205 so that the level becomes 1.5Vp-p ± 0.05Vp-p as shown in Figure E3-B.

4-8-4. C A/D INPUT (2) ADJ.

A. FOR AG-8700

BOARD	TBC (1) C.B.A. (E11)
TP	COMPONENT OUT (PB, PR)
ADJ.	VR8203 (B-1), VR8302 (C-1)
TAPE	
INPUT	COLOR BAR SIGNAL (LINE)
MODE	EJECT (E-E)
M. EQ	W.F.M. or OSCILLOSCOPE
SPEC.	0mV ± 10mV

≪ SET UP ≫
VIDEO MODE : COLOR (MENU NO.2002)
PB/EE SELECT : EE (MENU NO.2004)
TBC SW : ON
INPUT SW : LINE

1. Connect the W.F.M. to Component PR OUT.
2. Adjust VR8203 so that the level in figure becomes minimum (0mV ± 10mV) as shown in Figure E4-A.

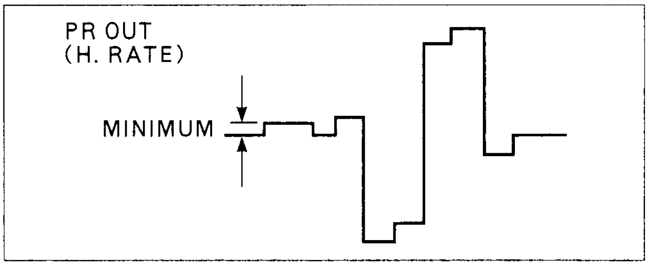

Figure E4-A

3. Connect the W.F.M. to Component PB OUT.
4. Adjust VR8302 so that the level becomes minimum (0mV ± 10mV) as shown in Figure E4-B.

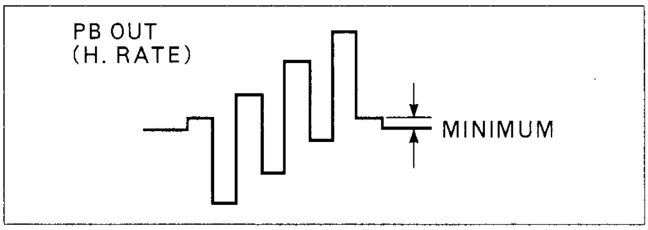

Figure E4-B

B. FOR AG-8600

BOARD	TBC (1) C.B.A. (E11)
TP	COMPONENT OUT (PB, PR)
ADJ.	VR8203 (B-1), VR8302 (E-1)
TAPE	C.B. OTHER RECORDED TAPE
INPUT	
MODE	PLAYBACK
M. EQ	W.F.M. or OSCILLOSCOPE
SPEC.	0mV ± 10mV

≪ SET UP ≫
IMAGE MODE SELECT : EDIT (MENU NO.2001)
VIDEO MODE : COLOR (MENU NO.2002)
TBC SW : ON

1. Play back the color bar signal recorded by other recorder in the S-VHS mode.
2. Connect the W.F.M. to Component PR OUT.
3. Adjust VR8203 so that the level becomes minimum (0mV ± 10mV) as shown in Figure E3-A.
4. Connect the W.F.M. to Component PB OUT.
5. Adjust VR8302 so that the level becomes minimum (0mV ± 10mV) as shown in Figure E3-B.

4-8-5. Y D/A REF. DC ADJ.

BOARD	TBC (1) C.B.A. (E11)
TP	TP8052 (F-1)
ADJ.	VR8001 (F-1)
TAPE	
INPUT	COLOR BAR
MODE	EJECT
M. EQ	VTVM or DVM
SPEC.	4.1V ± 0.05V

≪ SET UP ≫
TBC CONTROL : CENTER POSITION (OSD)
VIDEO MODE : COLOR (MENU NO.2002)
TBC SW : ON
INPUT SW : LINE

1. Connect the VTVM or DVM to TP8052.
2. Adjust VR8001 so that the DC voltage becomes 4.1V ± 0.05V.

4-8-6. C A/D OUTPUT LEVEL ADJ.

A. FOR AG-8700

BOARD	TBC (1) C.B.A. (E11)
TP	TP8051 (F-1)
ADJ.	VR8002 (E-1)
TAPE	
INPUT	COLOR BAR SIGNAL (LINE)
MODE	EJECT (E-E)
M. EQ	V.T.V.M. or D.V.M.
SPEC.	3.5V ± 0.05V

≪ SET UP ≫
TBC CONTROL : CENTER POSITION (OSD)
VIDEO MODE : COLOR (MENU NO.2002)
TBC SW : ON
INPUT SW : LINE

1. Connect the V.T.V.M. or D.V.M. to TP8051.
2. Adjust VR8002 so that the DC voltage becomes 3.5V ± 0.05V.

B. FOR AG-8600

BOARD	TBC (1) C.B.A. (E11)
TP	TP8051 (F-1)
ADJ.	VR8002 (F-1)
TAPE	C.B. OTHER RECORDED TAPE
INPUT	
MODE	PLAYBACK
M. EQ	V.T.V.M. or D.V.M.
SPEC.	3.5V ± 0.05V

≪ SET UP ≫
TBC CONTROL : CENTER POSITION (OSD)
VIDEO MODE : COLOR (MENU NO.2002)
TBC SW : ON

1. Play back the color bar signal recorded by other recorder in the S-VHS mode.
2. Connect the V.T.V.M. or D.V.M. to TP8051.
3. Adjust VR8002 so that the DC voltage becomes 3.5V ± 0.05V.

4-8-7. READ CLOCK FREQ. ADJ.

BOARD	TBC (1) C.B.A. (E11)
TP	TP8502 (E-1)
ADJ.	VC8501 (E-1)
TAPE	
INPUT	COLOR BAR (REF IN)
MODE	EJECT
M. EQ	FREQ. COUNTER
SPEC.	28.4385MHz ± 100Hz

≪ SET UP ≫
TBC SW : ON
INPUT SELECT : LINE

1. Connect the frequency counter to TP8502.
2. Adjust VC8501 so that the frequency becomes 28.4385MHz ± 100Hz.

4-8-8. S/H ADJ.

BOARD	TBC (2) C.B.A. (E12)
TP	TP8603 (A-4), TP8604 (B-1)
ADJ.	VR8601 (B-1)
TAPE	
INPUT	COLOR BAR SIGNAL (REF. IN)
MODE	EJECT (E-E)
M. EQ	OSCILLOSCOPE
SPEC.	A=B±10%

≪ SET UP ≫
TBC SW : ON
INPUT SELECT : LINE

1. Supply a color bar signal to the REF. IN.
2. Connect the scope to TP8603 for CH-1 and TP8604 for CH-2.
3. Adjust VR8601 so that the position of S/H pulse (TP8604) becomes as shown in Figure E5.

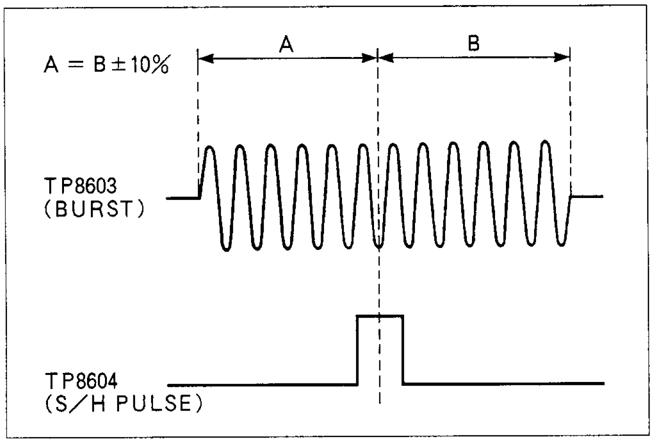

Figure E5

4-8-9. 17.7MHz VCO ADJ.

BOARD	TBC (2) C.B.A. (E12)
TP	TP8606 (A-1)
ADJ.	VC8671 (A-2)
TAPE	
INPUT	COLOR BAR SIGNAL (REF IN)
MODE	EJECT (E-E)
M. EQ	OSCILLOSCOPE
SPEC.	0V ± 0.1V

≪ SET UP ≫
TBC SW : ON
INPUT SELECT : LINE

1. Supply a color bar signal to the REF INPUT.
2. Connect the scope to TP8606.
3. Adjust VC8671 so that the DC Voltage become 0 ± 0.1V.

4-8-10. REF. SCH ADJ.

BOARD	TBC (2) C.B.A. (E12)
TP	TP8609 (C-2), TP8610 (C-2)
ADJ.	VR8603 (B-1)
TAPE	
INPUT	COLOR BAR SIGNAL (REF. & LINE)
MODE	EJECT (E-E)
M. EQ	OSCILLOSCOPE
SPEC.	A = B±10%

≪ NOTE ≫
SCH of a color bar signal (REF. & LINE) should be 0° .

≪ SET UP ≫
TBC SW : ON
INPUT SELECT : LINE

1. Connect the scope to TP8609 for CH1 and TP8610 for CH2.
2. Adjust VR8603 so that the timing of the signals at TP8609 and TP8610 is as shown in Figure E6

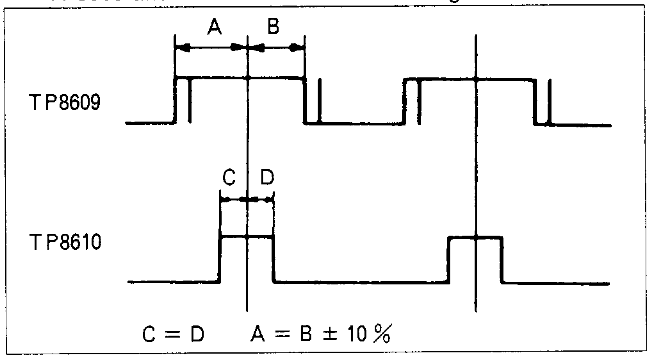

Figure E6

4-8-11. C COMP. OUT LEVEL ADJ.

BOARD	TBC (1) (E11), TBC (2) C.B.A. (E12)
TP	COMPONENT OUT
ADJ.	VR8810 (PR) (F-1,TBC2) VR8811 (PB) (G-1,TBC2) VR8206 (A-1 , TBC1)
TAPE	
INPUT	COLOR BAR
MODE	EJECT
M. EQ	COMPONENT VECTOR SCOPE
SPEC.	FIG.E7

≪ SET UP ≫
TBC CONTROL : CENTER POSITION (OSD)
VIDEO MODE : COLOR (MENU NO.2002)
PB/EE SELECT : EE (MENU NO.2004)
TBC SW : ON
INPUT SW : LINE

1. Connect the component output to COMPONENT VECTOR SCOPE.
2. Adjust VR8810,VR8811 and VR8206 so that the all vectors are stakitiged as as shown in Figure E7.

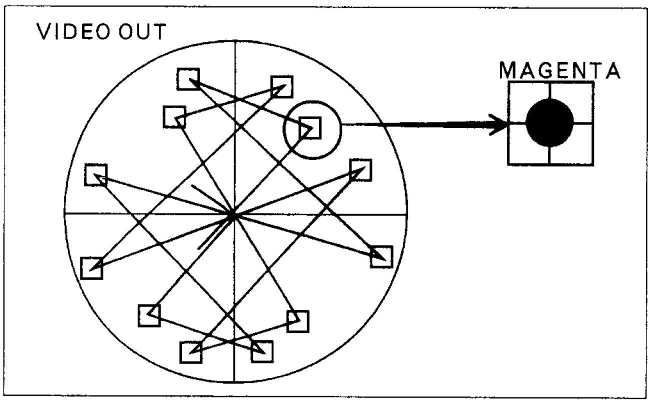

Figure E7

4-8-12. DECORDER APC ADJ.

A. FOR AG-8700

BOARD	TBC (1) C.B.A. (E11)
TP	VIDEO OUT (75Ω)
ADJ.	VR8207 (A-1)
TAPE	
INPUT	COLOR BAR SIGNAL (LINE)
MODE	EJECT (E-E)
M. EQ	VECTORSCOPE
SPEC.	FIG. E8

≪ NOTE ≫
The Video output should be terminated by 75Ω.

≪ SET UP ≫
TBC CONTROL : CENTER POSITION (OSD)
VIDEO MODE : COLOR (MENU NO.2002)
PB/EE SELECT : EE (MENU NO.2004)
TBC SW : ON
INPUT SW : LINE

1. Connect the vectorscope to the COMPONENT outtput.
2. Adjust VR8207 so that the two vectors are closed as possible shown in Figure E8.

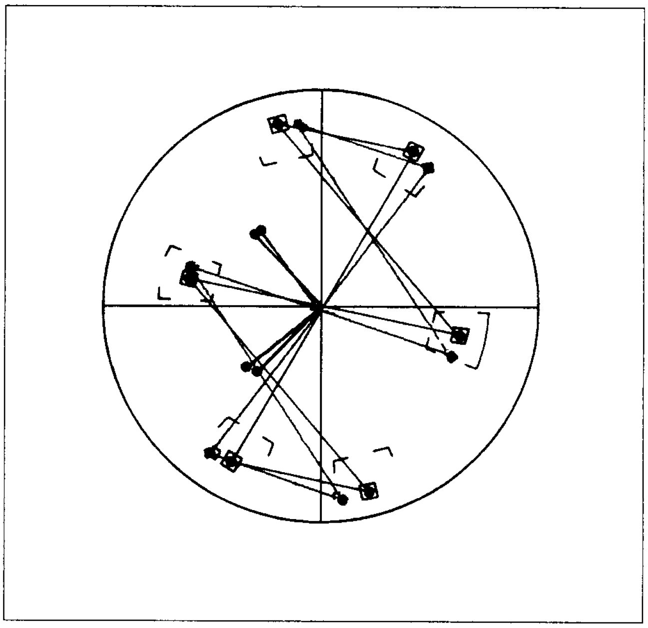

Figure E8

B. FOR AG-8600

BOARD	TBC (1) C.B.A. (E11)
TP	VIDEO OUT (75Ω)
ADJ.	VR8207 (A-1)
TAPE	C.B. OTHER RECORDED TAPE
INPUT	
MODE	EJECT (E-E)
M. EQ	VECTORSCOPE
SPEC.	FIG. E8

≪ NOTE ≫
The Video output should be terminated by 75Ω.
≪ SET UP ≫
TBC CONTROL : CENTER POSITION (OSD)
VIDEO MODE : COLOR (MENU NO.2002)
TBC SW : ON

1. Play back the color bar signal recorded by other recorder in the S-VHS mode.
2. Connect the vectorscope to VIDEO OUTPUT.
3. Set the vectorscope in the EXT mode and connect as shown Figure E8.
4. Adjust VR8207 so that the all vectors are stabilized as shown in Figure E8.

4-8-13. Y OUTPUT LEVEL ADJ.

A. FOR AG-8700

BOARD	TBC (2) C.B.A. (E12)
TP	VIDEO OUT (75Ω)
ADJ.	VR8804 (F-2)
TAPE	
INPUT	COLOR BAR SIGNAL (LINE)
MODE	EJECT (E-E)
M. EQ	OSCILLOSCOPE
SPEC.	0.7Vp-p ± 0.05Vp-p

≪ NOTE ≫
VIDEO OUT should be 75Ω terminated.

≪ SET UP ≫
TBC CONTROL : CENTER POSITION (OSD)
VIDEO MODE : COLOR (MENU NO.2002)
PB/EE SELECT : EE (MENU NO.2004)
TBC SW : ON
INPUT SW : LINE

1. Connect the oscilloscope to VIDEO OUT.
2. Adjust VR8804 so that the Y level becomes 0.7Vp-p ± 0.05Vp-p as shown in Figure E9.

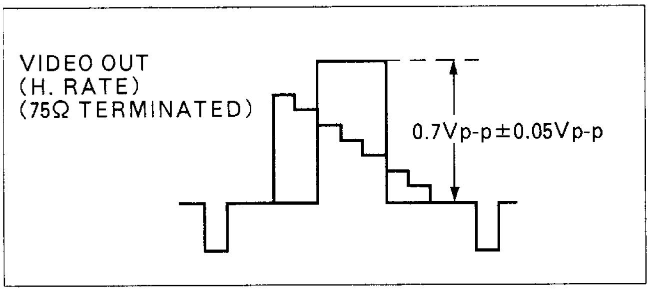

Figure E9

B. FOR AG-8600

BOARD	TBC (2) C.B.A. (E12)
TP	VIDEO OUT (75Ω)
ADJ.	VR8804 (F-2)
TAPE	C.B. OTHER RECORDED TAPE (S-VHS)
INPUT	
MODE	PLAYBACK
M. EQ	OSCILLOSCOPE
SPEC.	0.7V ± 0.05V

≪ NOTE ≫
VIDEO OUT should be 75Ω terminated.

≪ SET UP ≫
TBC CONTROL : CENTER POSITION (OSD)
IMAGE MODE SELECT : EDIT (MENU NO.2001)
VIDEO MODE : COLOR (MENU NO.2002)
TBC SW : ON

1. Play back the color bar signal recorded by other recorder in the S-VHS mode.
2. Connect the oscilloscope to VIDEO OUT.
3. Adjust VR8804 so that the Y level becomes 0.7V ± 0.05V as shown in Figure E9.

4-8-14. SYNC LEVEL ADJ.

A. FOR AG-8700

BOARD	TBC (2) C.B.A. (E12)
TP	VIDEO OUT (75Ω)
ADJ.	VR8803 (F-2)
TAPE	
INPUT	COLOR BAR SIGNAL (LINE)
MODE	EJECT (E-E)
M. EQ	OSCILLOSCOPE
SPEC.	0.3Vp-p ± 0.03Vp-p

≪ NOTE ≫
This adjustment should be performed only after completion of 4-8-13. Y Output Level Adj.
VIDEO OUT should be 75Ω terminated.

≪ SET UP ≫
TBC CONTROL : CENTER POSITION (OSD)
VIDEO MODE : COLOR (MENU NO.2002)
PB/EE SELECT : EE (MENU NO.2004)
VIDEO LEVEL control : PUSH (AGC : ON)
TBC SW : ON
INPUT SW : LINE

1. Connect the oscilloscope to VIDEO OUT.
2. Adjust VR8803 so that the SYNC level becomes 0.3Vp-p ± 0.03V as shown in Figure E10.

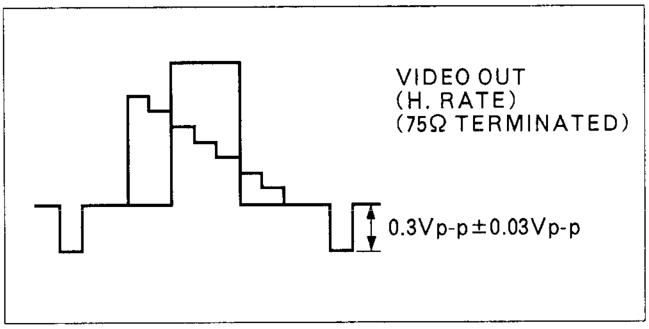

Figure E10

B. FOR AG-8600

BOARD	TBC (2) C.B.A. (E12)
TP	VIDEO OUT (75Ω)
ADJ.	VR8803 (F-2)
TAPE	C.B. OTHER RECORDED TAPE (S-VHS)
INPUT	
MODE	PLAYBACK
M. EQ	OSCILLOSCOPE
SPEC.	0.3V ± 0.03V

MC-Service

≪ NOTE ≫

This adjustment should be performed only after completion of 7-5-4. Y Output Level Adj.
VIDEO OUT should be 75Ω terminated.

≪ SET UP ≫

IMAGE MODE SELECT : EDIT (MENU NO.2001)
TBC CONTROL : CENTER POSITION (OSD)
VIDEO MODE : COLOR (MENU NO.2002)
TBC SW : ON

1. Play back the color bar signal recorded by other recorder in the S-VHS mode.
2. Connect the oscilloscope to VIDEO OUT.
3. Adjust VR8804 so that the SYNC level becomes 0.3V ± 0.03V as shown in Figure E10.

4-8-15. CARRIER BALANCE ADJ.

A. FOR AG-8700

BOARD	TBC (2) C.B.A. (E12)
TP	VIDEO OUT (75Ω)
ADJ.	VR8807 (E-1), VR8808 (F-1)
TAPE	
INPUT	COLOR BAR SIGNAL (LINE)
MODE	EJECT (E-E)
M. EQ	VECTORSCOPE
SPEC.	FIG. E11

≪ NOTE ≫

VIDEO OUT should be 75Ω terminated.

≪ SET UP ≫

TBC CONTROL : CENTER POSITION
VIDEO MODE : COLOR (MENU NO.2002)
INPUT SW : LINE
TBC SW : ON
VIDEO LEVEL control : PUSH (AGC : ON)

1. Connect the vectorscope to VIDEO OUT and adjust VR8807 and VR8808 so that the point "C" becomes center of the vector scope as shown in Figure E11.

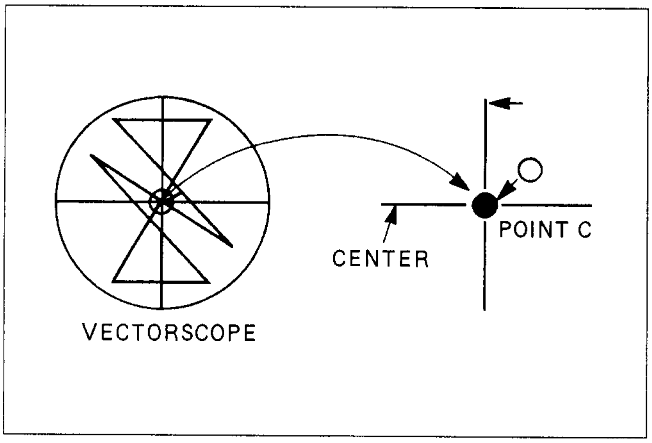

Figure E11

B. FOR AG-8600

BOARD	TBC (2) C.B.A. (E12)
TP	VIDEO OUT (75Ω)
ADJ.	VR8807 (E-1), VR8808 (F-1)
TAPE	C.B. OTHER RECORDED TAPE
INPUT	
MODE	PLAYBACK
M. EQ	VECTORSCOPE
SPEC.	FIG. E11

≪ NOTE ≫

VIDEO OUT should be 75Ω terminated.

≪ SET UP ≫

TBC CONTROL : CENTER POSITION
VIDEO MODE : COLOR (MENU NO.2002)
TBC SW : ON

1. Play back the color bar signal recorded by other recorder in the S-VHS mode.
2. Connect the vectorscope to VIDEO OUT and adjust VR8807 and VR8808 so that the point "C" becomes center of the vector scope as shown in Figure E11.

4-8-16. BURST LEVEL ADJ.

A. FOR AG-8700

BOARD	TBC (2) C.B.A. (E12)
TP	VIDEO OUT (75Ω)
ADJ.	VR8806 (E-1),VR8809(F-1),VR8815(D-1)
TAPE	
INPUT	COLOR BAR SIGNAL (LINE)
MODE	EJECT (E-E)
M. EQ	VECTORSCOPE
SPEC.	FIG. E12

≪ NOTE ≫

This adjustment should be performed only after completion of 4-8-15. Carrier Balance Adj.
VIDEO OUT should be 75Ω terminated.

≪ SET UP ≫

TBC CONTROL : CENTER POSITION
VIDEO MODE : COLOR (MENU NO.2002)
INPUT SW : LINE
TBC SW : ON
VIDEO LEVEL control : PUSH (AGC : ON)

1. Connect the vectorscope to VIDEO OUT.
2. Adjust the vectorscope so that the burst signal becomes 75%.
3. Adjust VR8806,VR8809 and VR8815 so that the burst signal becomes 75% as shown in Figure E12.

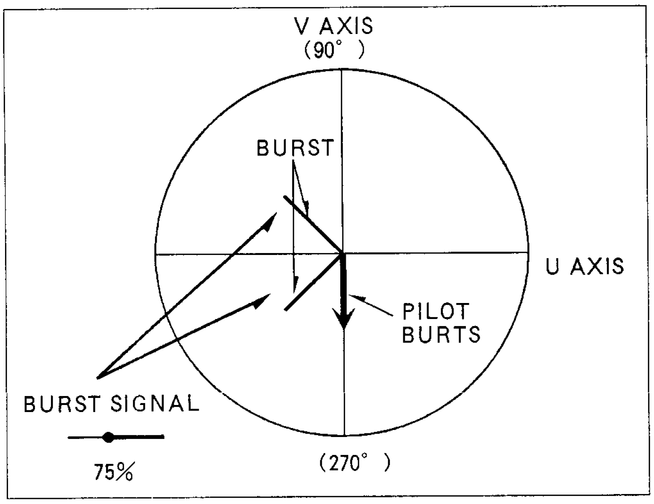

Figure E12

B. FOR AG-8600

BOARD	TBC (2) C.B.A. (E12)
TP	VIDEO OUT (75Ω)
ADJ.	VR8806 (E-1), VR8809(F1), VR8815(D-1)
TAPE	C.B. OTHER RECORDED TAPE
INPUT	
MODE	PLAYBACK
M. EQ	VECTORSCOPE
SPEC.	FIG. E12

≪ NOTE ≫
This adjustment should be performed only after completion of 4-8-15. Carrier Balance Adj.
VIDEO OUT should be 75Ω terminated.
≪ **SET UP** ≫
TBC CONTROL : CENTER POSITION
VIDEO MODE : COLOR (MENU NO.2002)
TBC SW : ON

1. Play back the color bar signal recorded by other recorder in the S-VHS mode.
2. Connect the vectorscope to VIDEO OUT.
3. Adjust VR8806,VR8809,VR8815 that the burst signal becomes 75% as shown in Figure E12.

4-8-17. CHROMA VECTOR BALANCE ADJ.

A. FOR AG-8700

BOARD	TBC (2) C.B.A. (E12)
TP	VIDEO OUT (75Ω)
ADJ.	VR8801 (E-1), VR8802 (E-1), VR8815 (D-1) VC8801 (D-2)
TAPE	
INPUT	COLOR BAR SIGNAL (LINE)
MODE	EJECT (E-E)
M. EQ	VECTORSCOPE
SPEC.	FIG. E13

≪ **NOTE** ≫
VIDEO OUT should be 75Ω terminated.
≪ **SET UP** ≫
TBC CONTROL : CENTER POSITION
VIDEO MODE : COLOR (MENU NO.2002)
TBC SW : ON
INPUT SW : LINE
VIDEO LEVEL control : PUSH (AGC : ON)

1. Connect the vectorscope to VIDEO OUT.
2. Adjust VR8801,VR8802 , VR8815 and VC8801 so that the all vectors except the burst phase become correct position as shown in Figure E13.

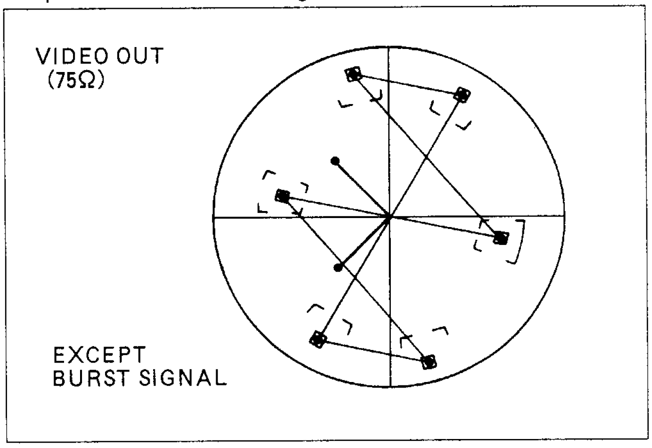

Figure E13

B. FOR AG-8600

BOARD	TBC (2) C.B.A. (E12)
TP	VIDEO OUT (75Ω)
ADJ.	VR8801 (E-1), VR8802 (E-1), VR8815 (D-1)
TAPE	C.B. OTHER RECORDED TAPE
INPUT	
MODE	PLAYBACK
M. EQ	VECTORSCOPE
SPEC.	FIG. E13

≪ **NOTE** ≫
VIDEO OUT should be 75Ω terminated.
≪ **SET UP** ≫
TBC CONTROL : CENTER POSITION
VIDEO MODE : COLOR (MENU NO.2002)
TBC SW : ON

1. Play back the color bar signal recorded by other recorder in the S-VHS mode.
2. Connect the vectorscope to VIDEO OUT.
3. Adjust VR8801,VR8802 and VR8815,VR8801 so that the all vectors except the burst phase become correct position as shown in Figure E13.

4-8-18. CHROMA PHASE ADJ.

A. FOR AG-8700

BOARD	TBC (2) C.B.A. (E12)
TP	VIDEO OUT (75Ω)
ADJ.	VR8814 (D-1)
TAPE	
INPUT	COLOR BAR SIGNAL (LINE)
MODE	EJECT (E-E)
M. EQ	VECTORSCOPE
SPEC.	FIG. E14

≪ NOTE ≫
VIDEO OUT should be 75Ω terminated.
≪ SET UP ≫
TBC CONTROL : CENTER POSITION
VIDEO MODE : COLOR (MENU NO.2002)
TBC SW : ON
INPUT SW : LINE
VIDEO LEVEL control : PUSH (AGC : ON)

1. Connect the vectorscope to VIDEO OUTPUT.
2. Adjust the vectorscope so that the burst signal becomes 75%
3. Adjust VR8814 so that the vector dot of magenta becomes in the innerbox as shown in Figure E14.

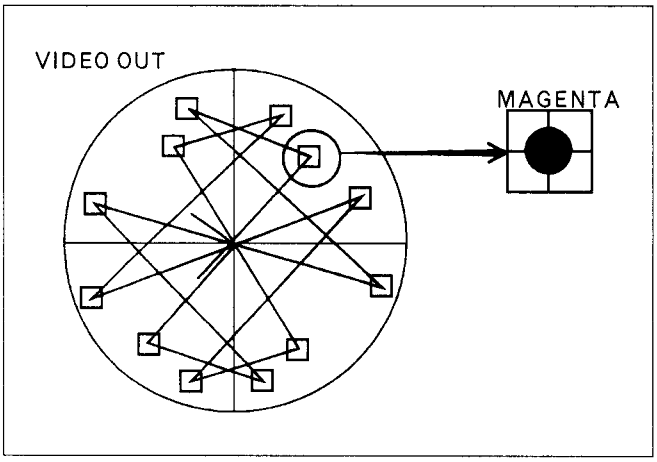

Figure E14

B. FOR AG-8600

BOARD	TBC (2) C.B.A. (E12)
TP	VIDEO OUT (75Ω)
ADJ.	VR8814 (D-1)
TAPE	COLOR BAR RECODED TAPE (S-VHS)
INPUT	
MODE	PLAY BACK
M. EQ	VECTORSCOPE
SPEC.	FIG. E14

≪ NOTE ≫
VIDEO OUT should be 75Ω terminated.
≪ SET UP ≫
TBC CONTROL : CENTER POSITION
VIDEO MODE : COLOR (MENU NO.2002)
VIDEO LEVEL control : PUSH (AGC : ON)
TBC SW : ON

1. Connect the vectorscope to VIDEO OUTPUT.
2. Play back the color bar signal recorded by other recorder in the S-VHS mode.
3. Adjust the vectorscope so that the burst signal becomes 75%.
4. Adjust VR8814 so that the vector dot of magenta becomes in the innerbox shown in Figure E14.

4-8-19. SCH PHASE ADJ.

BOARD	TBC (2) C.B.A. (E12)
TP	VIDEO OUT (75Ω)
ADJ.	SW8701 (C-1), VR8602 (B-1)
TAPE	
INPUT	COLOR BAR SIGNAL (REF. & LINE)
MODE	EJECT (E-E)
M. EQ	SCH METER
SPEC.	0 ± 2°

≪ NOTE ≫
VIDEO OUT should be 75Ω terminated.
SCH of a color bar signal (REF. & LINE) should be 0°.
Trigger of SCH METER should be EXT.
≪ SET UP ≫
VIDEO MODE : COLOR (MENU NO.2002)
PB/EE SELECT : EE (MENU NO.2004)
TBC SW : ON
INPUT SW : LINE

1. Connect the SCH Meter as shown in Figure E15-A.
2. Adjust SW8701 and VR8602 so that the SCH phase becomes 0° ± 2° as shown in Figure E15-A.

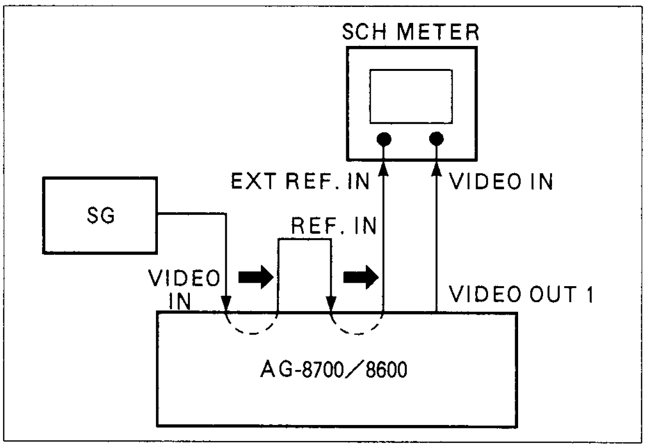

Figure E15-A

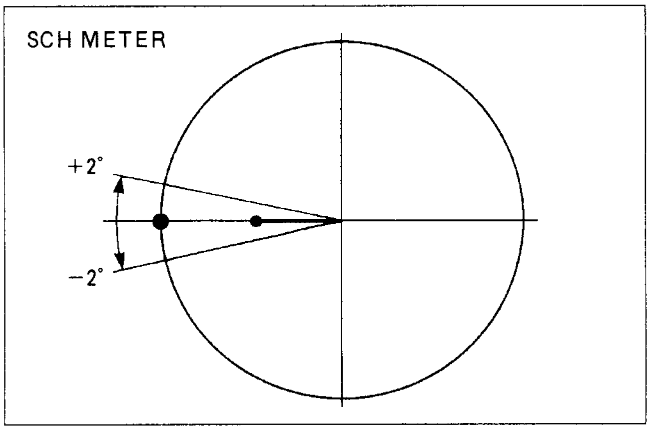

Figure E15-B

4-8-20. SYSTEM H PHASE ADJ.

BOARD	TBC (2) C.B.A. (E12)
TP	REF VIDEO, VIDEO OUT (75Ω)
ADJ.	VR8701 (B-1)
TAPE	
INPUT	COLOR BAR SIGNAL (REF.)
MODE	EJECT (E-E)
M. EQ	OSCILLOSCOPE
SPEC.	FIG. E42-B

≪ NOTE ≫
VIDEO OUT should be 75Ω terminated.
SCH of color bar signal (REF.) should be 0° .
≪ SET UP ≫
VIDEO MODE : COLOR (MENU NO.2002)
TBC CONTROL (SYSTEM H PHASE) : CENTER (OSD)
TBC SW : ON
INPUT SW : LINE

1. Connect the scope as shown in Figure E16-A.
2. Adjust VR8701 so that the H phase of these signals are the same as shown in Figure E16-B.

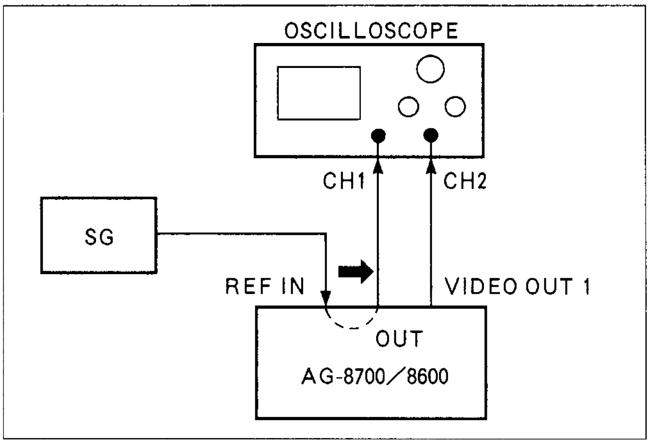

Figure E16-A

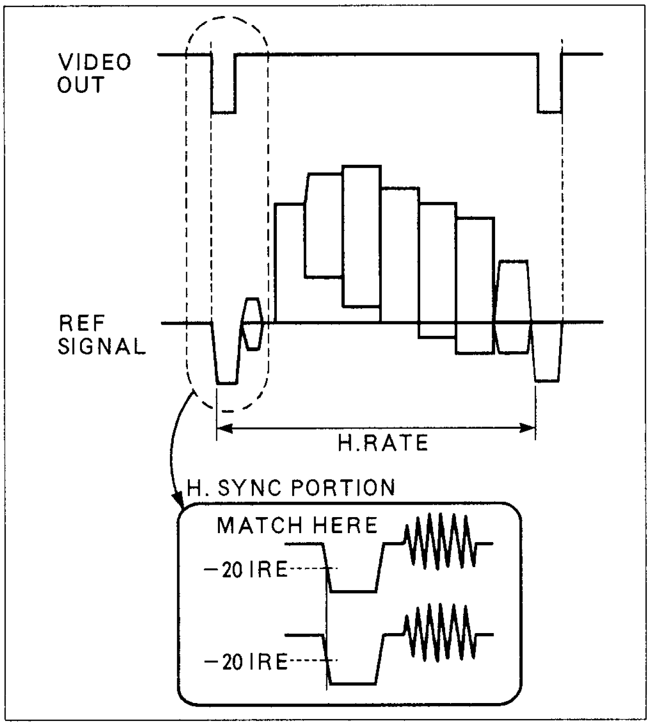

Figure E16-B

4-8-21. Y/C TIMING ADJ.

A. FOR AG-8700

BOARD	TBC (1) C.B.A. (E11)
TP	VIDEO OUT (75Ω)
ADJ.	VR8152 (D-1)
TAPE	
INPUT	SIN^2 PULSE & BAR SIGNAL (LINE)
MODE	EJECT (E-E)
M. EQ	W.F.M. or OSCILLOSCOPE
SPEC.	A=B ± 3%

≪ NOTE ≫
VIDEO OUT should be 75Ω terminated.
≪ SET UP ≫
TBC CONTROL : CENTER POSITION
VIDEO MODE : COLOR (MENU NO.2002)
TBC SW : ON
INPUT SW : LINE

1. Connect the oscilloscope (W.F.M.) to VIDEO OUT and expanded the "A" portion as shown in Figure E17-A.
3. Adjust VR8152 so that the waveform becomes as shown in Figure E17-B.

MC-Service

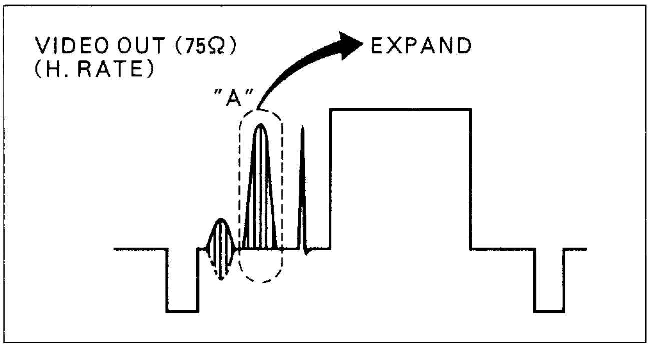

Figure E17-A

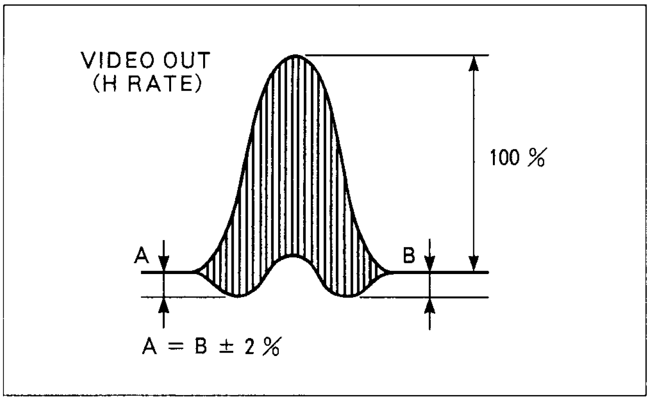

Figure E17-B

B. FOR AG-8600

BOARD	TBC (1) C.B.A. (E11)
TP	VIDEO OUT (75Ω)
ADJ.	VR8152 (D-1)
TAPE	SIN^2 PULSE & BAR SIGNAL OTHER RECORDED TAPE (S-VHS)
INPUT	
MODE	PLAY
M. EQ	OSCILLOSCOPE or W.F.M.
SPEC.	A=B ± 3%

≪ NOTE ≫
VIDEO OUT should be 75Ω terminated.
≪ SET UP ≫
IMAGE MODE SELECT : NORMAL (MENU NO.2001)
TBC SW : ON

1. Play back the SIN^2 PULSE & BAR SIGNAL recorded by other recorder in the S-VHS mode.
2. Connect the oscilloscope (W.F.M.) to VIDEO OUT and expanded the "A" portion as shown in Figure E17-A.
3. Adjust VR8152 so that the waveform becomes as shown in Figure E17-B.

4-8-22. VIDEO PHASE ADJ.

A. FOR AG-8700

BOARD	TBC (1) C.B.A. (E-11)
TP	VIDEO OUT (75Ω)
ADJ.	VR8151 (D-1)
TAPE	
INPUT	SIN^2 PULSE & BAR SIGNAL (LINE)
MODE	EJECT (E-E)
M. EQ	W.F.M. or OSCILLOSCOPE
SPEC.	FIG. E18

≪ NOTE ≫
VIDEO OUT should be 75Ω terminated.
≪ SET UP ≫
VIDEO MODE : COLOR (MENU NO.2002)
PB/EE SELECT : EE (MENU NO.2004)
INPUT SW : LINE
TBC : ON/OFF

1. Connect a scope (W.F.M.) to VIDEO OUTPUT.
2. Expand the pulse portion as shown in Figure E114.
3. Select the TBC switch on the front panel to the ON and OFF alternately and adjust VR8151 so that the timing of the pulse portion becomes the same in the local mode and by-pass mode as shown in Figure E18.

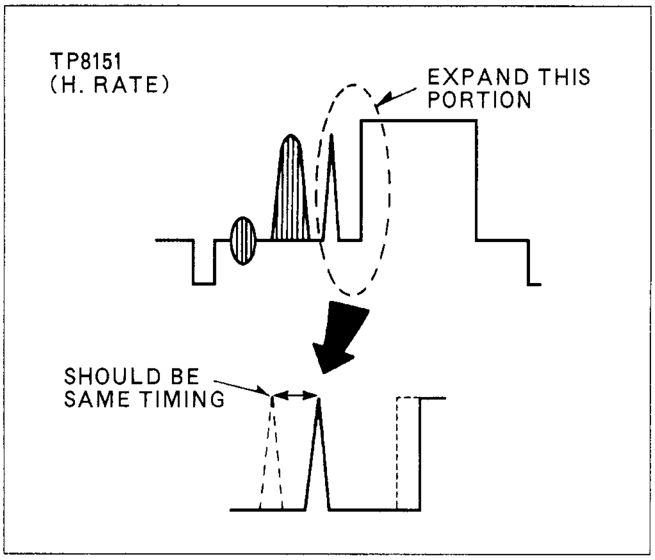

Figure E18

B. FOR AG-8600

BOARD	TBC (1) C.B.A. (E-11)
TP	VIDEO OUT (75Ω)
ADJ.	VR8151 (D-1)
TAPE	
INPUT	SIN² PULSE & BAR SIGNAL OTHER RECORDED TAPE (S-VHS)
MODE	PLAYBACK
M. EQ	W.F.M. or OSCILLOSCOPE
SPEC.	FIG. E18

≪ NOTE ≫

VIDEO OUT should be 75Ω terminated.

≪ SET UP ≫

VIDEO MODE : COLOR (MENU NO.2002)
INPUT SW : LINE
TBC : ON/OFF

1. Play back the SIN² PULSE & BAR SIGNAL recorded by other recorder in the S-VHS mode.
2. Connect a scope (W.F.M.) to VIDEO OUTPUT.
3. Expand the pulse portion as shown in Figure E18.
4. Select the TBC switch on the front panel to the ON and OFF alternately and adjust VR8151 so that the timing of the pulse portion becomes the same in the local mode and by-pass mode as shown in Figure E18.

4-8-23. BURST POSITION ADJ.

BOARD	TBC (2) C.B.A. (E12)
TP	VIDEO OUT (75Ω)
ADJ.	VR8805 (D-1)
TAPE	
INPUT	COLOR BAR SIGNAL (LINE)
MODE	EJECT (E-E)
M. EQ	W.F.M. or OSCILLOSCOPE
SPEC.	5.6 μsec ± 0.1 μsec

≪ NOTE ≫

VIDEO OUT should be 75Ω terminated.

≪ SET UP ≫

TBC CONTROL : CENTER POSITION
VIDEO MODE : COLOR (MENU NO.2002)
TBC SW : ON
INPUT SW : LINE
VIDEO LEVEL control : PUSH (AGC : ON)

1. Connect the W.F.M. to VIDEO OUT.
2. Adjust VR8805 so that the period of H. Sync (down edge) to Burst signal (Burst start point) becomes 5.6 μsec ± 0.1 μsec as shown in Figure E19.

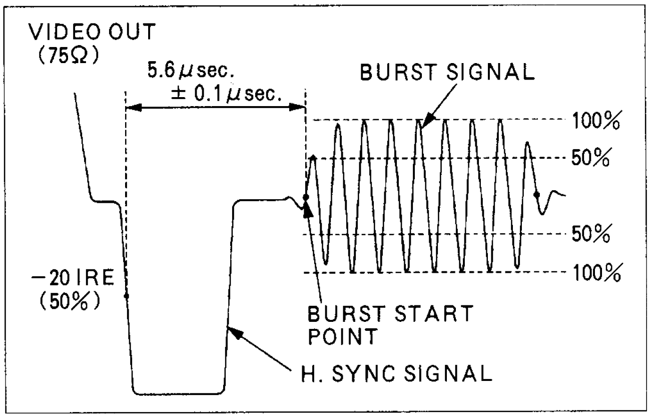

Figure E19

OVERALL BLOCK DIAGRAM

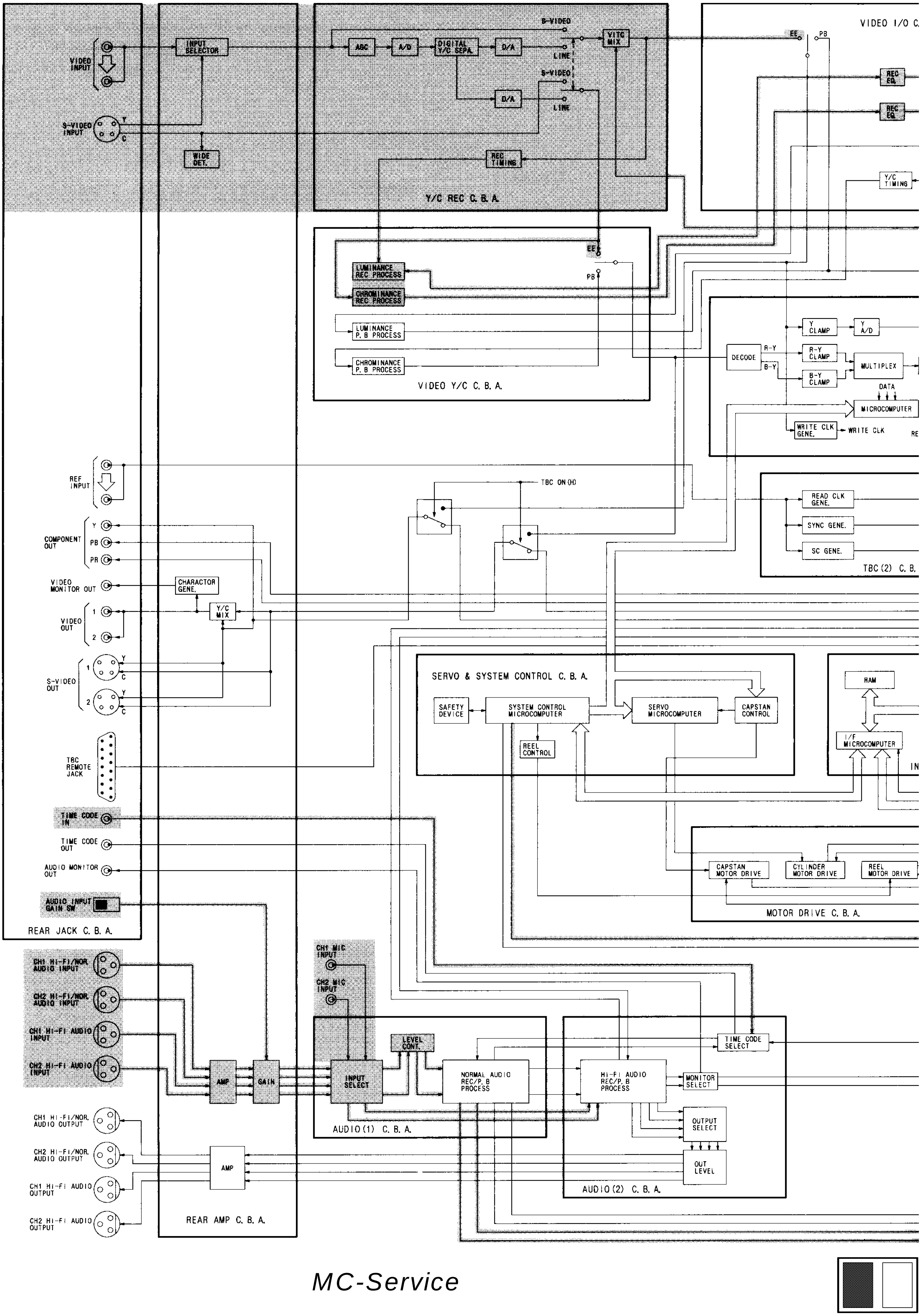

MC-Service

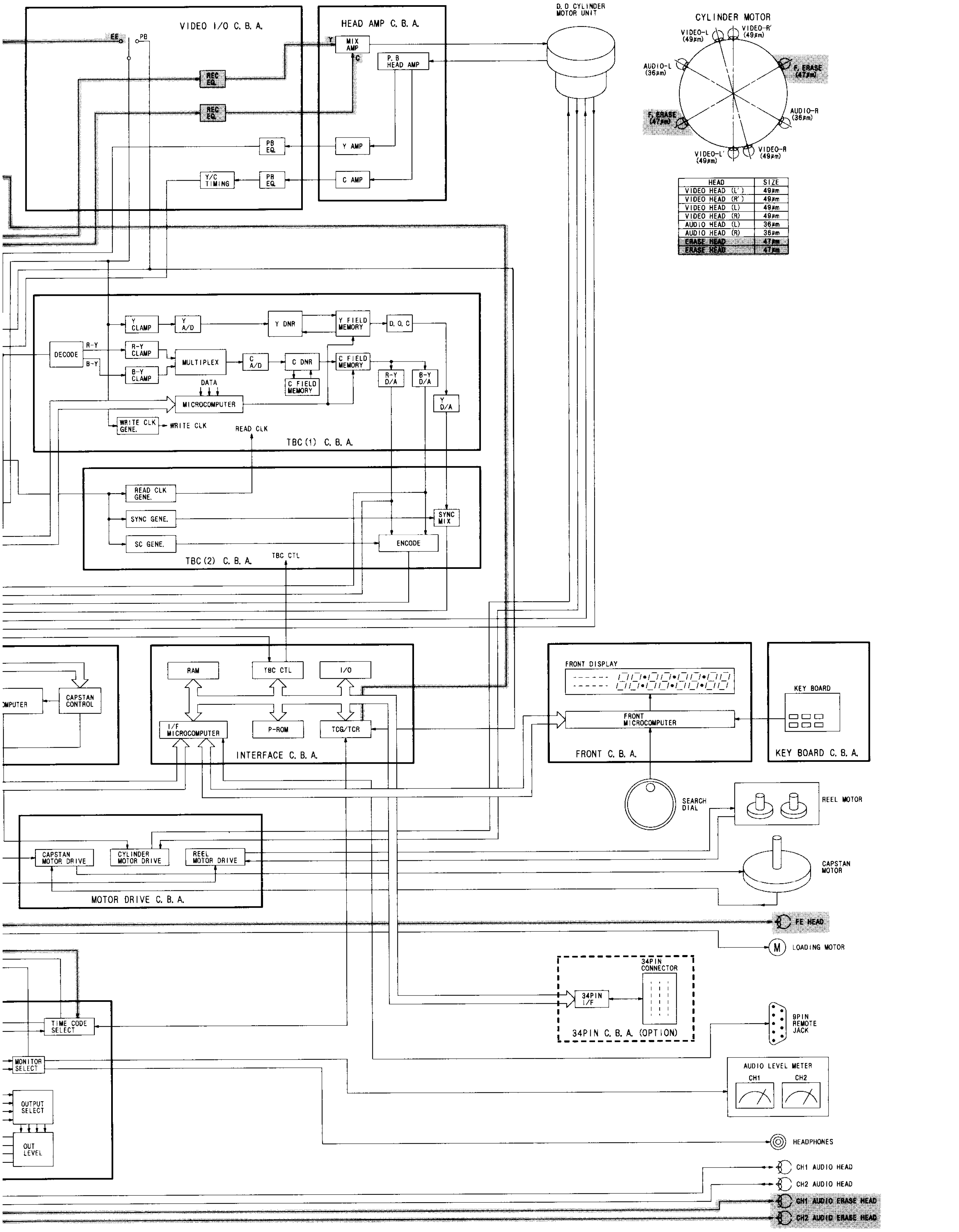

VIDEO I/O C. B. A.
EE
PB
REC EQ.
REC EQ.
PB EQ.
Y/C TIMING
PB EQ.
HEAD AMP C. B. A.
Y
MIX AMP
C
P. B HEAD AMP
Y AMP
C AMP
D. D CYLINDER MOTOR UNIT
CYLINDER MOTOR
VIDEO-L (49μm)
VIDEO-R' (49μm)
AUDIO-L (36μm)
F. ERASE (47μm)
F. ERASE (47μm)
AUDIO-R (36μm)
VIDEO-L' (49μm)
VIDEO-R (49μm)
HEAD
SIZE
VIDEO HEAD (L') 49μm
VIDEO HEAD (R') 49μm
VIDEO HEAD (L) 49μm
VIDEO HEAD (R) 49μm
AUDIO HEAD (L) 36μm
AUDIO HEAD (R) 36μm
ERASE HEAD 47μm
ERASE HEAD 47μm
Y CLAMP
Y A/D
Y DNR
Y FIELD MEMORY
D. O. C
DECODE
R-Y
B-Y
R-Y CLAMP
B-Y CLAMP
MULTIPLEX
C A/D
C DNR
C FIELD MEMORY
C FIELD MEMORY
R-Y D/A
B-Y D/A
Y D/A
DATA
MICROCOMPUTER
WRITE CLK GENE.
WRITE CLK
READ CLK
TBC (1) C. B. A.
READ CLK GENE.
SYNC GENE.
SC GENE.
SYNC MIX
ENCODE
TBC (2) C. B. A.
TBC CTL
MPUTER
CAPSTAN CONTROL
RAM
TBC CTL
I/O
I/F MICROCOMPUTER
P-ROM
TCG/TCR
INTERFACE C. B. A.
FRONT DISPLAY
FRONT MICROCOMPUTER
FRONT C. B. A.
KEY BOARD
KEY BOARD C. B. A.
SEARCH DIAL
REEL MOTOR
CAPSTAN MOTOR DRIVE
CYLINDER MOTOR DRIVE
REEL MOTOR DRIVE
MOTOR DRIVE C. B. A.
CAPSTAN MOTOR
FE HEAD
LOADING MOTOR
34PIN CONNECTOR
34PIN I/F
34PIN C. B. A. (OPTION)
9PIN REMOTE JACK
TIME CODE SELECT
MONITOR SELECT
AUDIO LEVEL METER
CH1
CH2
OUTPUT SELECT
OUT LEVEL
HEADPHONES
CH1 AUDIO HEAD
CH2 AUDIO HEAD
CH1 AUDIO ERASE HEAD
CH2 AUDIO ERASE HEAD

MC-Service

FRONT BLOCK DIAGRAM

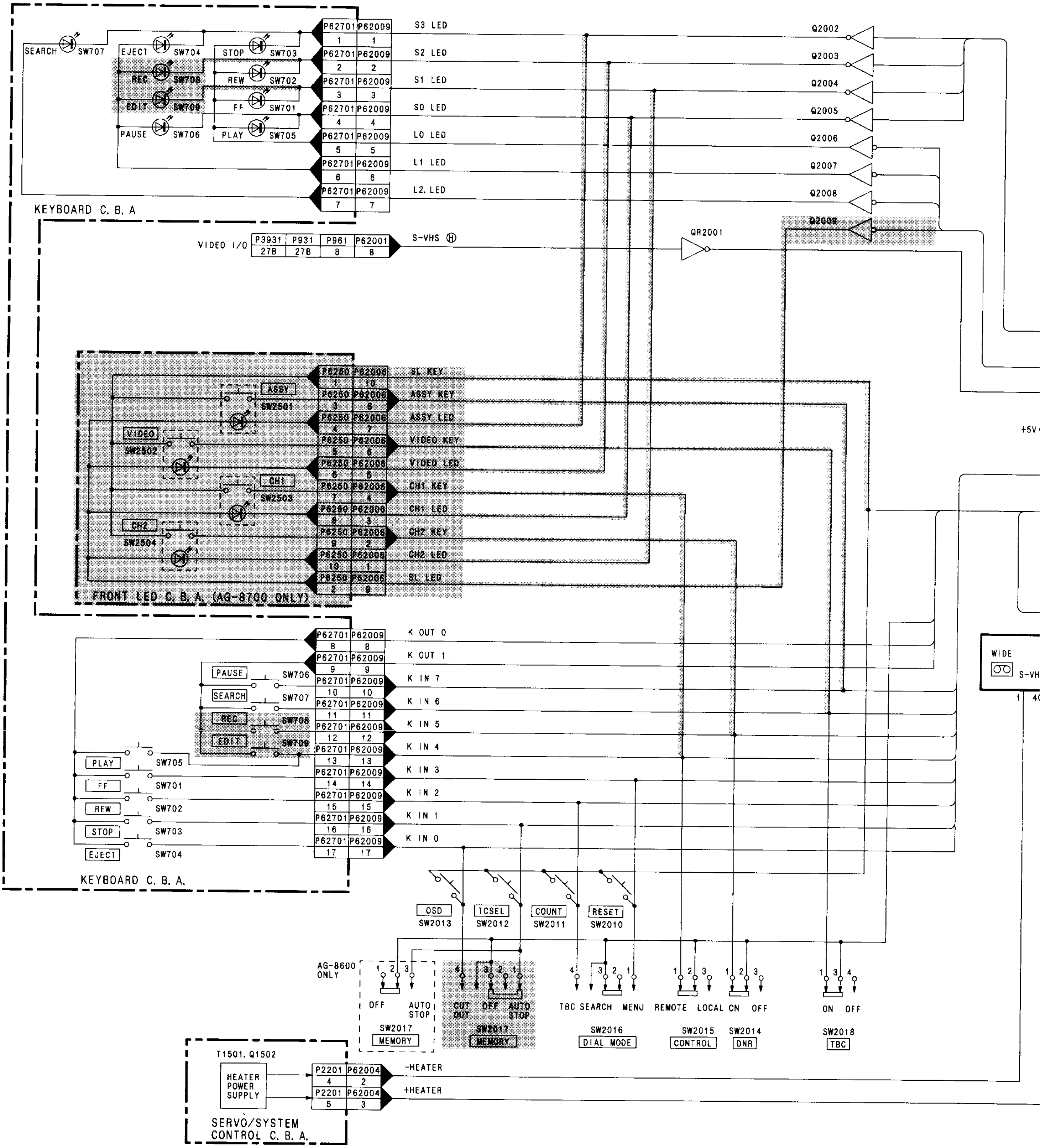

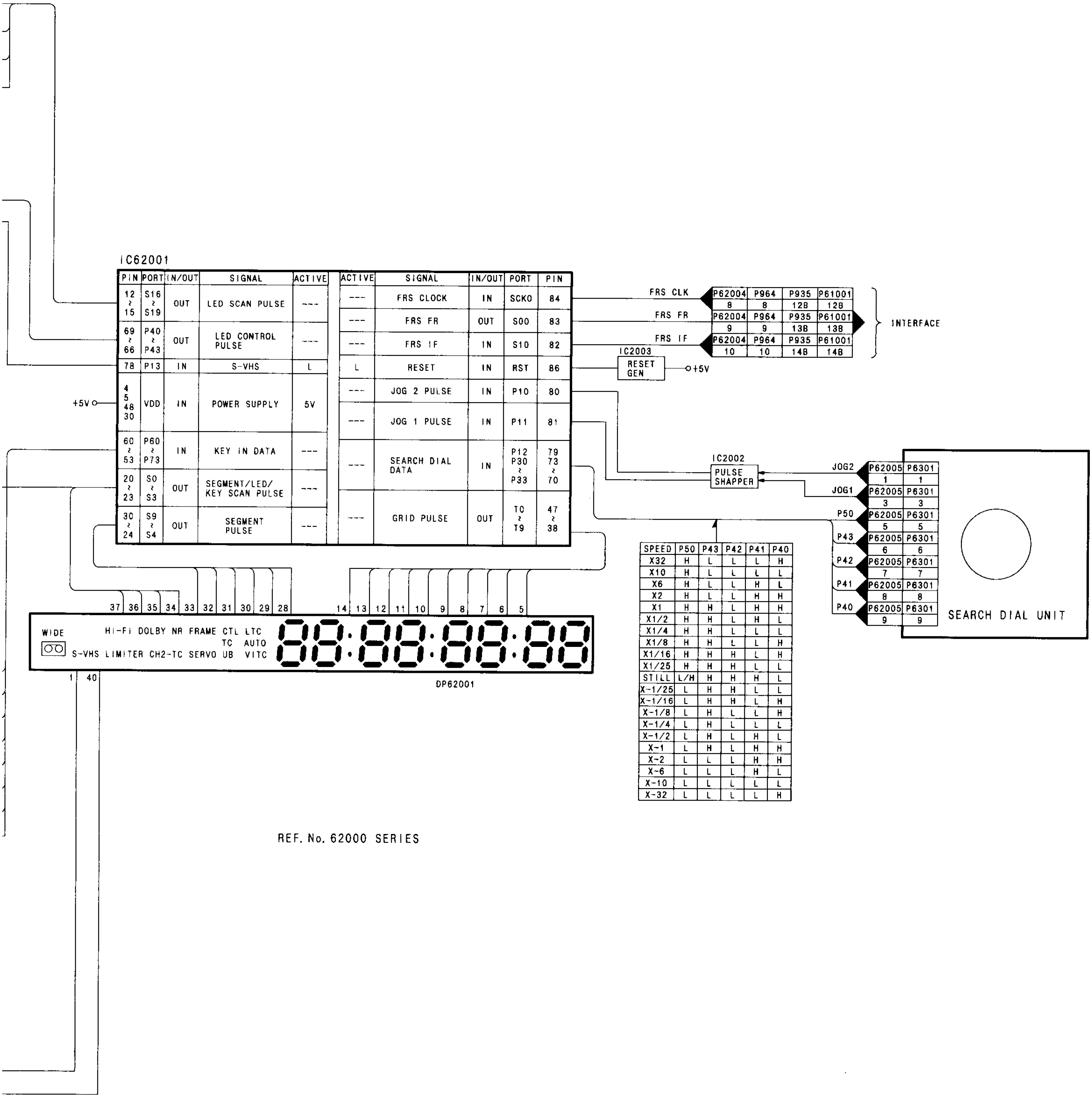

IC62001

PIN	PORT	IN/OUT	SIGNAL	ACTIVE
12 ~ 15	S16 ~ S19	OUT	LED SCAN PULSE	---
69 ~ 66	P40 ~ P43	OUT	LED CONTROL PULSE	---
78	P13	IN	S-VHS	L
4, 5, 48, 30	VDD	IN	POWER SUPPLY	5V
60 ~ 53	P60 ~ P73	IN	KEY IN DATA	---
20 ~ 23	S0 ~ S3	OUT	SEGMENT/LED/KEY SCAN PULSE	---
30 ~ 24	S9 ~ S4	OUT	SEGMENT PULSE	---

ACTIVE	SIGNAL	IN/OUT	PORT	PIN
---	FRS CLOCK	IN	SCK0	84
---	FRS FR	OUT	S00	83
---	FRS IF	IN	SI0	82
L	RESET	IN	RST	86
---	JOG 2 PULSE	IN	P10	80
---	JOG 1 PULSE	IN	P11	81
---	SEARCH DIAL DATA	IN	P12, P30 ~ P33	79, 73 ~ 70
---	GRID PULSE	OUT	T0 ~ T9	47 ~ 38

SPEED	P50	P43	P42	P41	P40
X32	H	L	L	L	H
X10	H	L	L	L	L
X6	H	L	L	H	L
X2	H	L	L	H	H
X1	H	H	L	H	H
X1/2	H	H	L	H	L
X1/4	H	H	L	L	L
X1/8	H	H	L	L	H
X1/16	H	H	H	L	H
X1/25	H	H	H	L	L
STILL	L/H	H	H	H	L
X-1/25	L	H	H	L	L
X-1/16	L	H	H	L	H
X-1/8	L	H	L	L	H
X-1/4	L	H	L	L	L
X-1/2	L	H	L	H	L
X-1	L	H	L	H	H
X-2	L	L	L	H	H
X-6	L	L	L	H	L
X-10	L	L	L	L	L
X-32	L	L	L	L	H

REF. No. 62000 SERIES

SYSTEM CONTROL BLOCK DIAGRAM

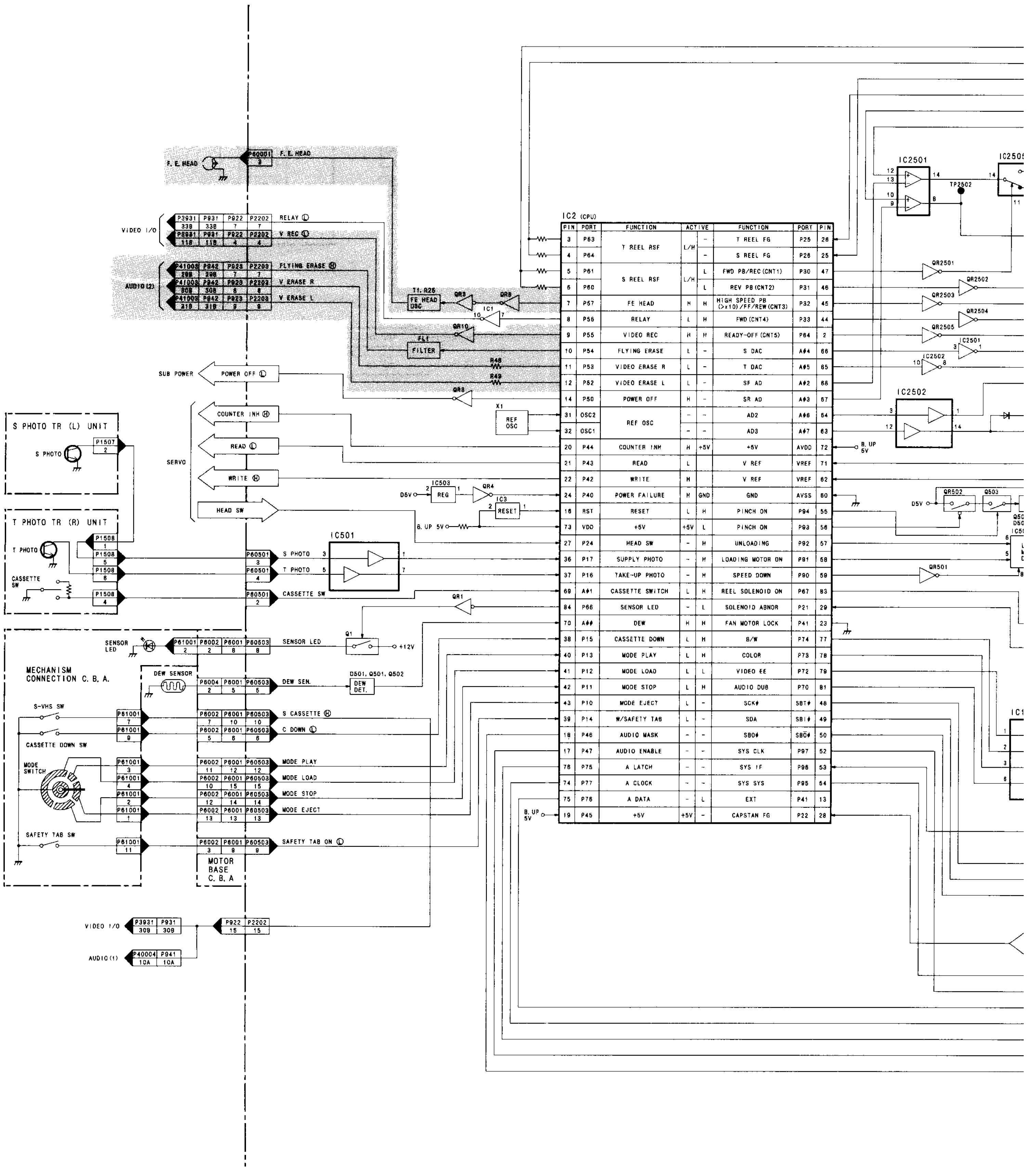

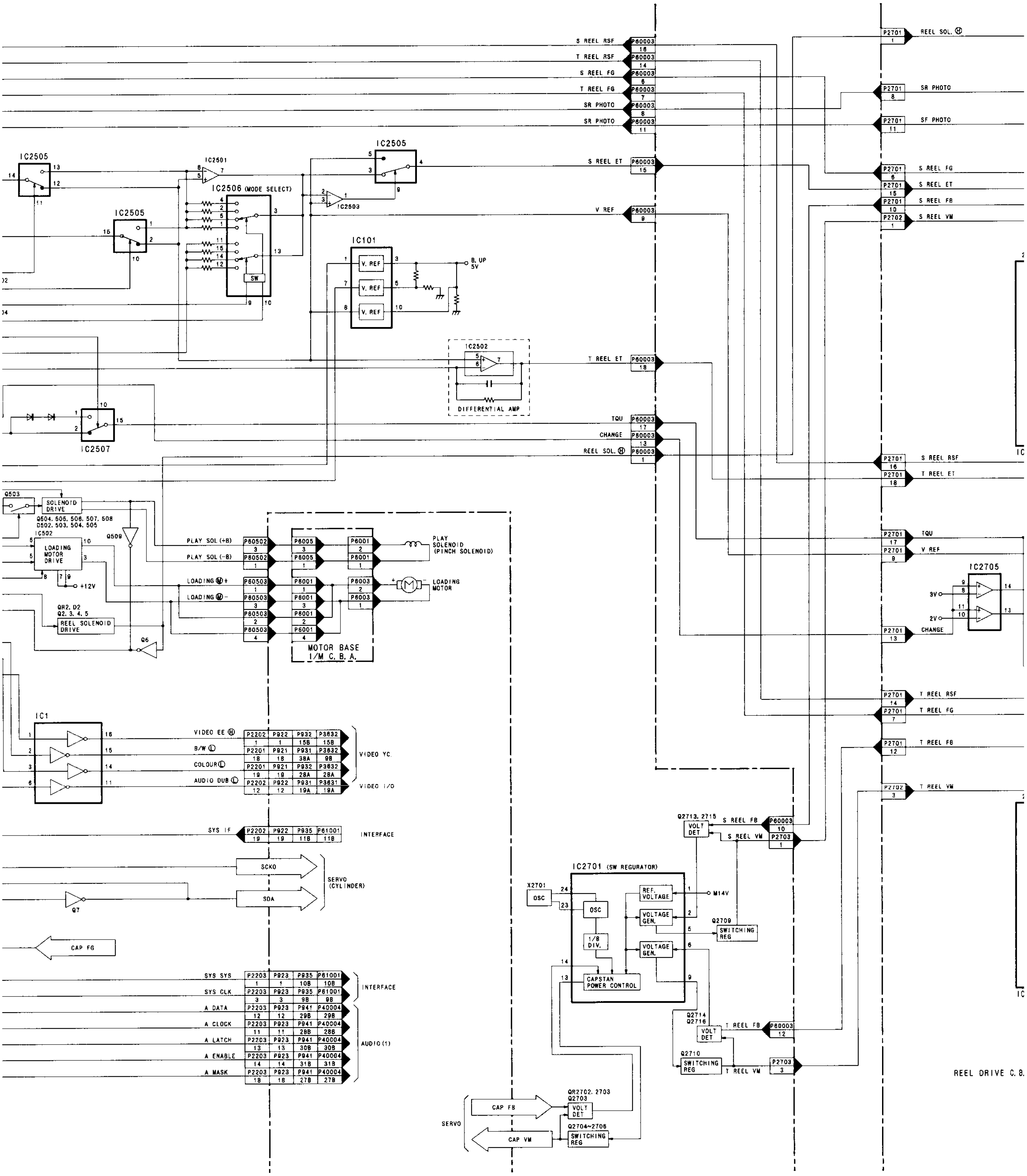

S REEL RSF
T REEL RSF
S REEL FG
T REEL FG
SR PHOTO
SF PHOTO
S REEL ET
V REF
T REEL ET
TQU
CHANGE
REEL SOL. Ⓗ
IC2505
IC2501
IC2506 (MODE SELECT)
IC2503
IC101
V. REF
B. UP 5V
IC2502
DIFFERENTIAL AMP
IC2507
Q503
SOLENOID DRIVE
Q504, 505, 506, 507, 508
D502, 503, 504, 505
IC502
LOADING MOTOR DRIVE
Q509
+12V
QR2, D2
Q2, 3, 4, 5
REEL SOLENOID DRIVE
Q6
PLAY SOL (+B)
PLAY SOL (-B)
LOADING Ⓜ +
LOADING Ⓜ -
PLAY SOLENOID (PINCH SOLENOID)
LOADING MOTOR
MOTOR BASE I/M C.B.A.
IC1
VIDEO EE Ⓗ
B/W Ⓛ
COLOUR Ⓛ
AUDIO DUB Ⓛ
VIDEO YC
VIDEO I/O
SYS IF
INTERFACE
SCKO
SDA
SERVO (CYLINDER)
Q7
CAP FG
SYS SYS
SYS CLK
A DATA
A CLOCK
A LATCH
A ENABLE
A MASK
AUDIO (1)
IC2705
3V
2V
Q2713, 2715
VOLT DET
S REEL FB
S REEL VM
IC2701 (SW REGURATOR)
X2701
OSC
REF. VOLTAGE
VOLTAGE GEN.
1/8 DIV.
CAPSTAN POWER CONTROL
M14V
Q2709
SWITCHING REG
Q2714
Q2716
T REEL FB
Q2710
T REEL VM
REEL DRIVE C.B.
CAP FB
CAP VM
SERVO
QR2702, 2703
Q2703
Q2704~2706

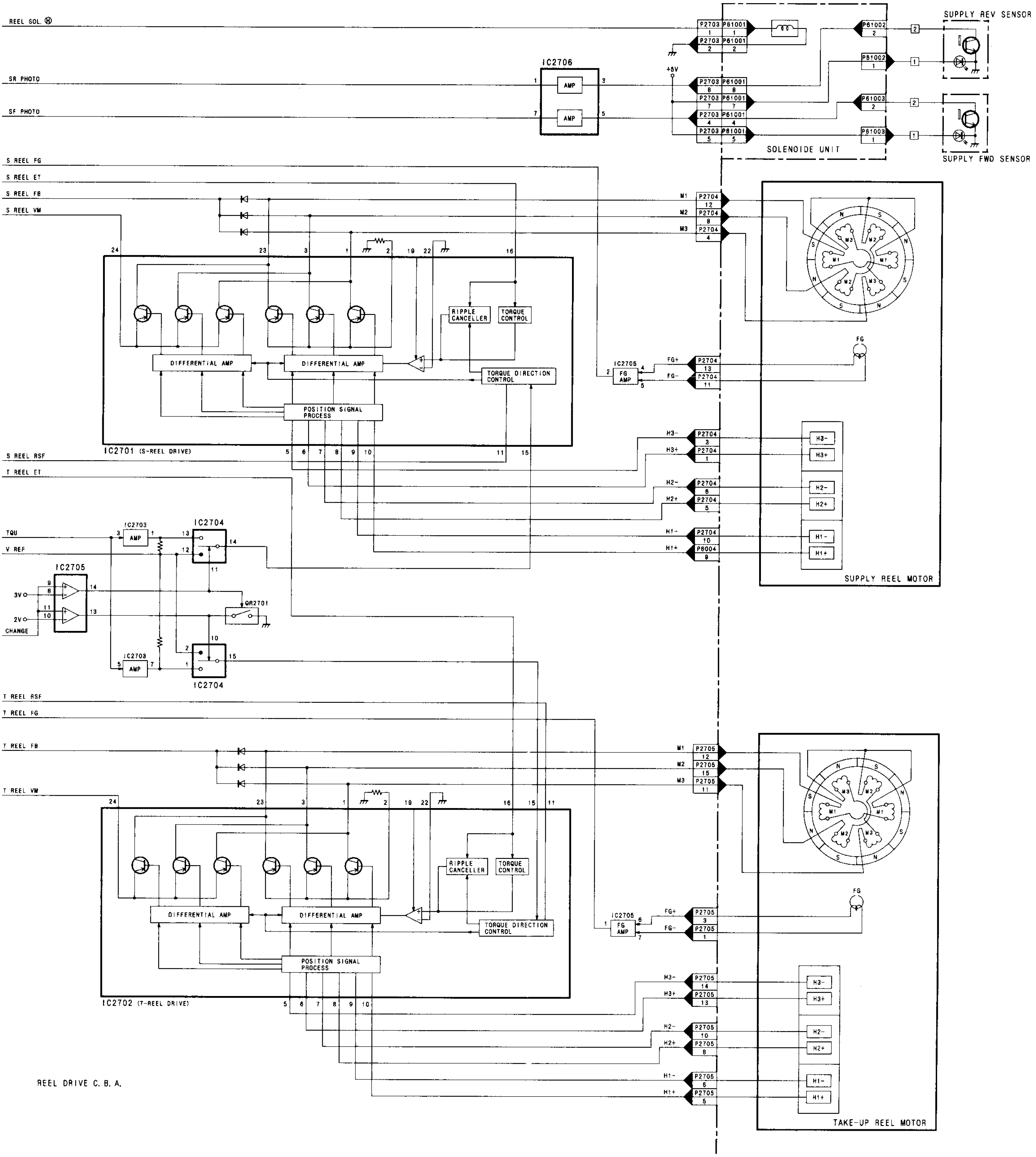
REEL SOL.
SR PHOTO
SF PHOTO
S REEL FG
S REEL ET
S REEL FB
S REEL VM
S REEL RSF
T REEL ET
TQU
V REF
3V
2V
CHANGE
T REEL RSF
T REEL FG
T REEL FB
T REEL VM
IC2706
AMP
+5V
SOLENOIDE UNIT
SUPPLY REV SENSOR
SUPPLY FWD SENSOR
RIPPLE CANCELLER
TORQUE CONTROL
DIFFERENTIAL AMP
TORQUE DIRECTION CONTROL
POSITION SIGNAL PROCESS
IC2701 (S-REEL DRIVE)
IC2705
FG AMP
IC2703
IC2704
QR2701
IC2702 (T-REEL DRIVE)
SUPPLY REEL MOTOR
TAKE-UP REEL MOTOR
REEL DRIVE C. B. A.

SERVO BLOCK DIAGRAM

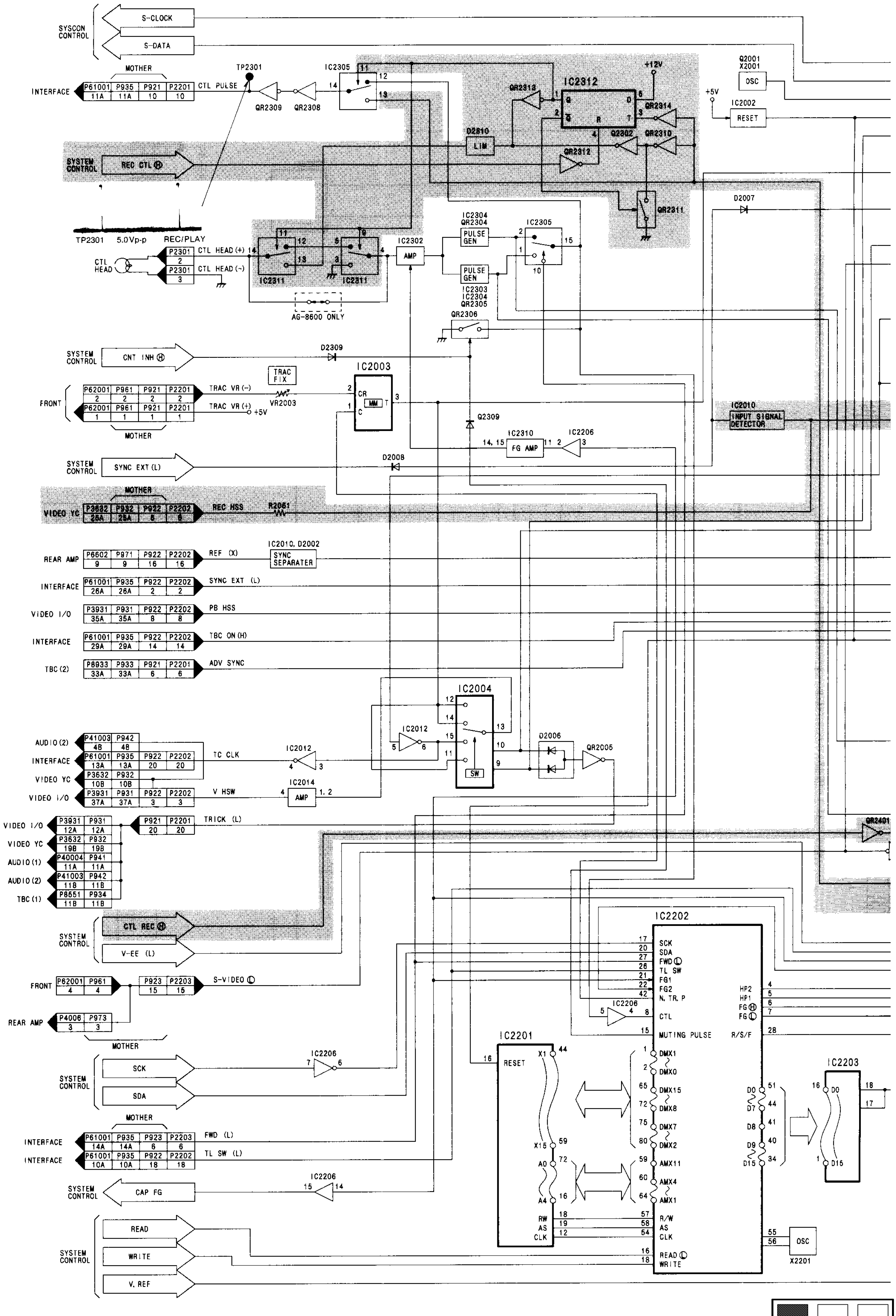

MC-Service

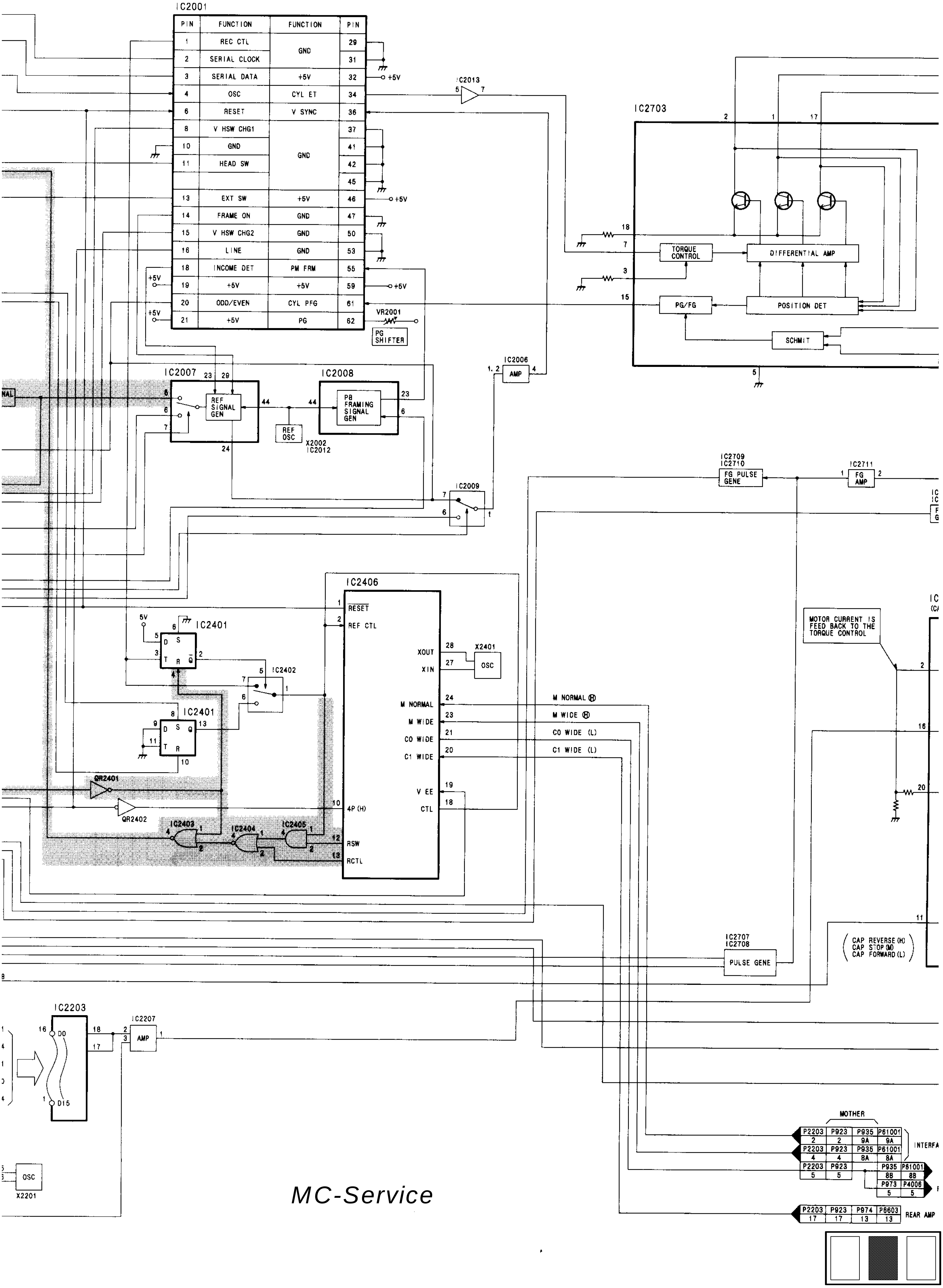

IC2001
PIN | FUNCTION | FUNCTION | PIN
1 REC CTL | GND | 29, 31
2 SERIAL CLOCK
3 SERIAL DATA | +5V | 32
4 OSC | CYL ET | 34
6 RESET | V SYNC | 36
8 V HSW CHG1 | GND | 37, 41, 42, 45
10 GND
11 HEAD SW
13 EXT SW | +5V | 46
14 FRAME ON | GND | 47
15 V HSW CHG2 | GND | 50
16 LINE | GND | 53
18 INCOME DET | PM FRM | 55
19 +5V | +5V | 59
20 ODD/EVEN | CYL PFG | 61
21 +5V | PG | 62
VR2001
PG SHIFTER
IC2013
IC2703
TORQUE CONTROL
DIFFERENTIAL AMP
PG/FG
POSITION DET
SCHMIT
IC2006 AMP
IC2007
REF SIGNAL GEN
IC2008
PB FRAMING SIGNAL GEN
REF OSC
X2002 IC2012
IC2009
IC2709 IC2710 FG PULSE GENE
IC2711 FG AMP
IC2406
RESET
REF CTL
XOUT
XIN
X2401 OSC
M NORMAL
M WIDE
CO WIDE
C1 WIDE
V EE
CTL
4P (H)
RSW
RCTL
IC2401
IC2402
QR2401
QR2402
IC2403
IC2404
IC2405
M NORMAL (H)
M WIDE (H)
CO WIDE (L)
C1 WIDE (L)
MOTOR CURRENT IS FEED BACK TO THE TORQUE CONTROL
CAP REVERSE (H)
CAP STOP (M)
CAP FORWARD (L)
IC2707 IC2708 PULSE GENE
IC2203
D0
D15
IC2207 AMP
OSC
X2201
MOTHER
P2203 2 | P923 2 | P935 9A | P61001 9A
P2203 4 | P923 4 | P935 8A | P61001 8A
P2203 5 | P923 5 | P61001 8B | P973 5 | P4006 5
INTERFA
P2203 17 | P923 17 | P974 13 | P6603 13
REAR AMP

MC-Service

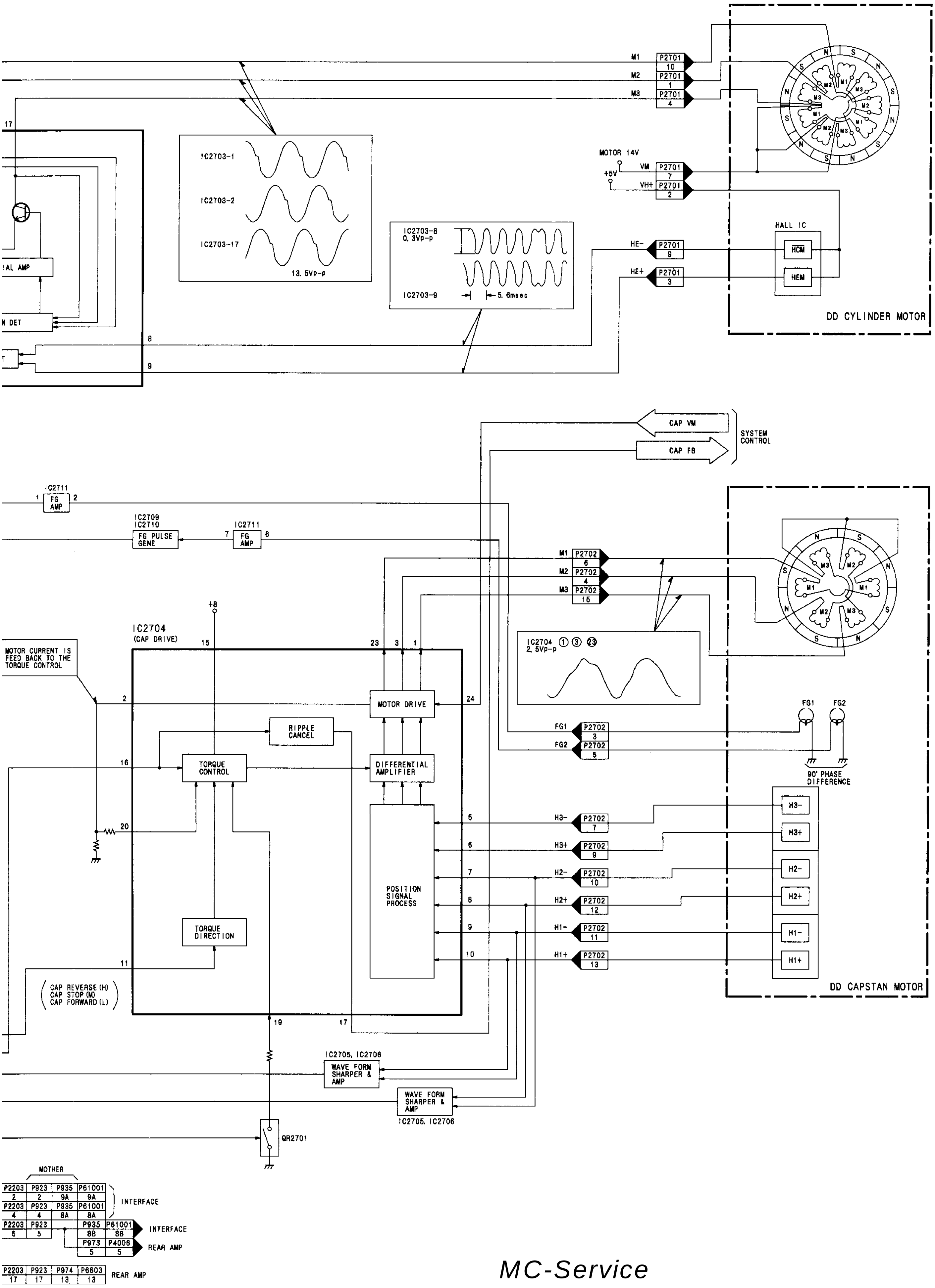

M1
M2
M3
P2701
10
1
4
7
2
9
3
MOTOR 14V
+5V
VM
VH+
HE-
HE+
HALL IC
HCM
HEM
DD CYLINDER MOTOR
IC2703-1
IC2703-2
IC2703-17
13.5Vp-p
IC2703-8
0.3Vp-p
IC2703-9
5.6msec
IAL AMP
N DET
CAP VM
CAP FB
SYSTEM CONTROL
IC2711
FG AMP
IC2709
IC2710
FG PULSE GENE
P2702
6
15
IC2704 ① ③ ㉓
2.5Vp-p
IC2704
(CAP DRIVE)
+B
MOTOR CURRENT IS FEED BACK TO THE TORQUE CONTROL
MOTOR DRIVE
RIPPLE CANCEL
TORQUE CONTROL
DIFFERENTIAL AMPLIFIER
POSITION SIGNAL PROCESS
TORQUE DIRECTION
CAP REVERSE (H)
CAP STOP (M)
CAP FORWARD (L)
FG1
FG2
90° PHASE DIFFERENCE
H3-
H3+
H2-
H2+
H1-
H1+
DD CAPSTAN MOTOR
IC2705, IC2706
WAVE FORM SHARPER & AMP
QR2701
MOTHER
P2203
P923
P935
P61001
9A
8A
8B
P973
P4006
P974
P6603
INTERFACE
REAR AMP

MC-Service

VIDEO YC BLOCK DIAGRAM

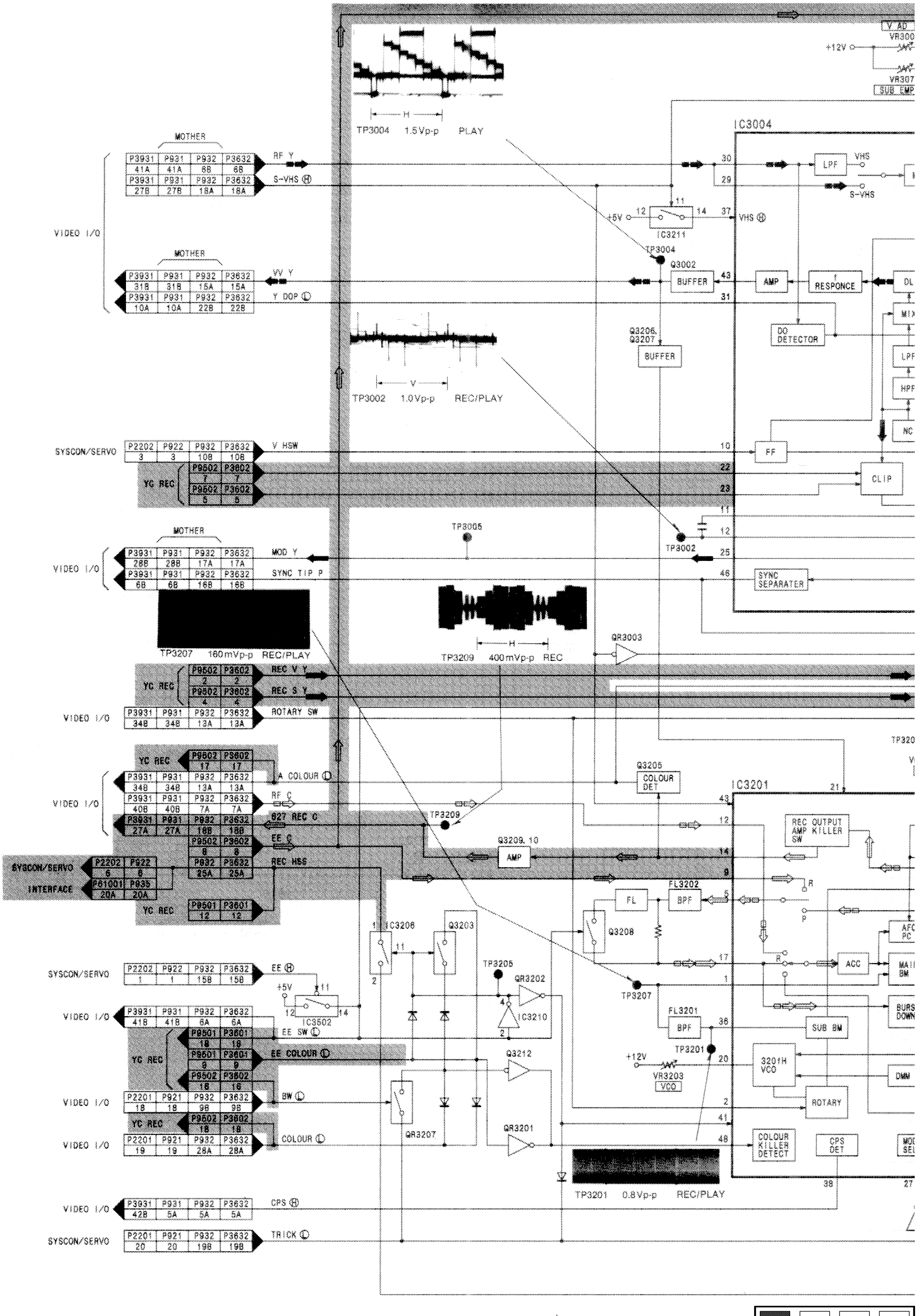

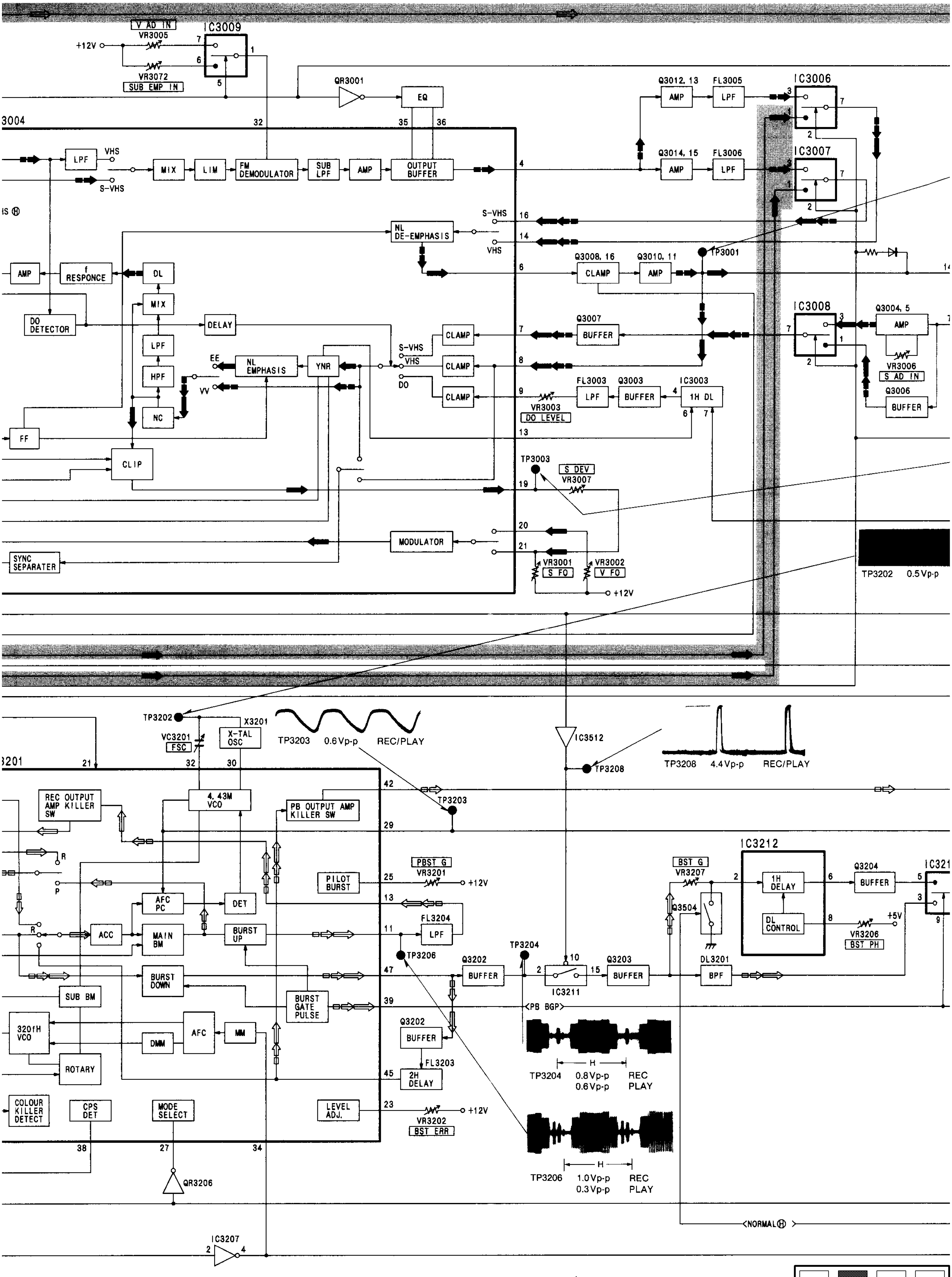
V AD IN
VR3005
IC3009
+12V
VR3072
SUB EMP IN
QR3001
EQ
Q3012, 13
FL3005
IC3006
AMP
LPF
Q3014, 15
FL3006
IC3007
3004
LPF
VHS
S-VHS
MIX
LIM
FM DEMODULATOR
SUB LPF
AMP
OUTPUT BUFFER
NL DE-EMPHASIS
S-VHS
VHS
AMP
f RESPONCE
DL
MIX
DO DETECTOR
DELAY
LPF
HPF
NC
EE
NL EMPHASIS
YNR
VV
DO
CLAMP
Q3008, 16
Q3010, 11
TP3001
Q3007
BUFFER
IC3008
Q3004, 5
VR3006
S AD IN
Q3006
FL3003
Q3003
IC3003
1H DL
VR3003
DO LEVEL
FF
CLIP
TP3003
S DEV
VR3007
MODULATOR
SYNC SEPARATER
VR3001
S FO
VR3002
V FO
+12V
TP3202 0.5Vp-p
TP3202
VC3201
FSC
X3201
X-TAL OSC
TP3203 0.6Vp-p REC/PLAY
IC3512
TP3208
TP3208 4.4Vp-p REC/PLAY
3201
REC OUTPUT AMP KILLER SW
4.43M VCO
PB OUTPUT AMP KILLER SW
TP3203
PILOT BURST
PBST G
VR3201
AFC PC
DET
ACC
MAIN BM
BURST UP
FL3204
LPF
TP3206
TP3204
BURST DOWN
BURST GATE PULSE
Q3202
BUFFER
IC3211
Q3203
DL3201
BPF
SUB BM
PB BGP
320fH VCO
AFC
DMM
MM
ROTARY
FL3203
2H DELAY
TP3204 0.8Vp-p REC
0.6Vp-p PLAY
COLOUR KILLER DETECT
CPS DET
MODE SELECT
LEVEL ADJ.
VR3202
BST ERR
TP3206 1.0Vp-p REC
0.3Vp-p PLAY
QR3206
IC3207
IC3212
1H DELAY
DL CONTROL
Q3204
BST G
VR3207
Q3504
VR3206
BST PH
+5V
NORMAL

CE MAIN SIGNAL PATH IN PLAYBACK MODE ⇦ CHROMINANCE MAIN SIGNAL PATH IN REC MODE ⇦

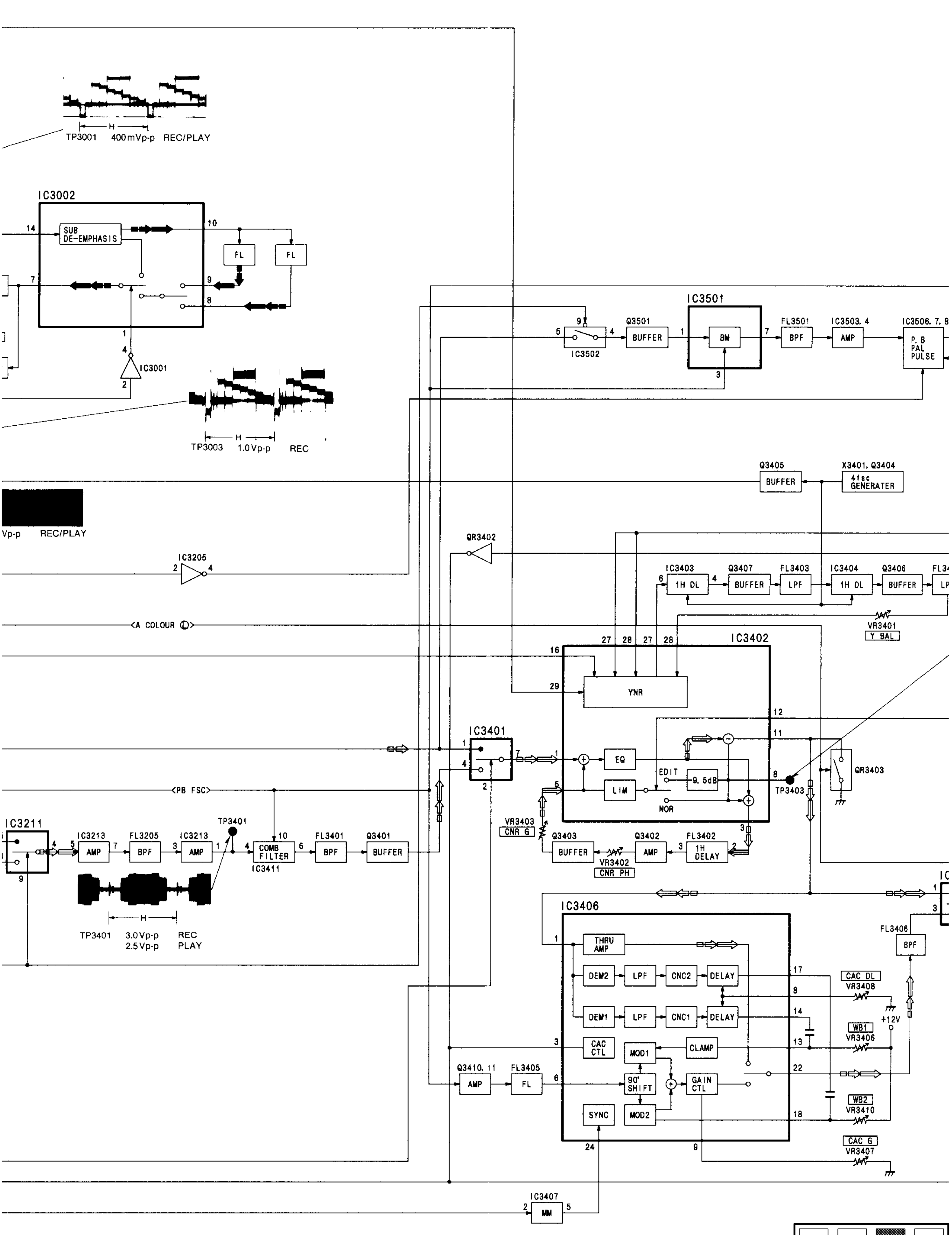

CHROMINANCE MAIN SIGNAL PATH IN PLAYBACK MODE

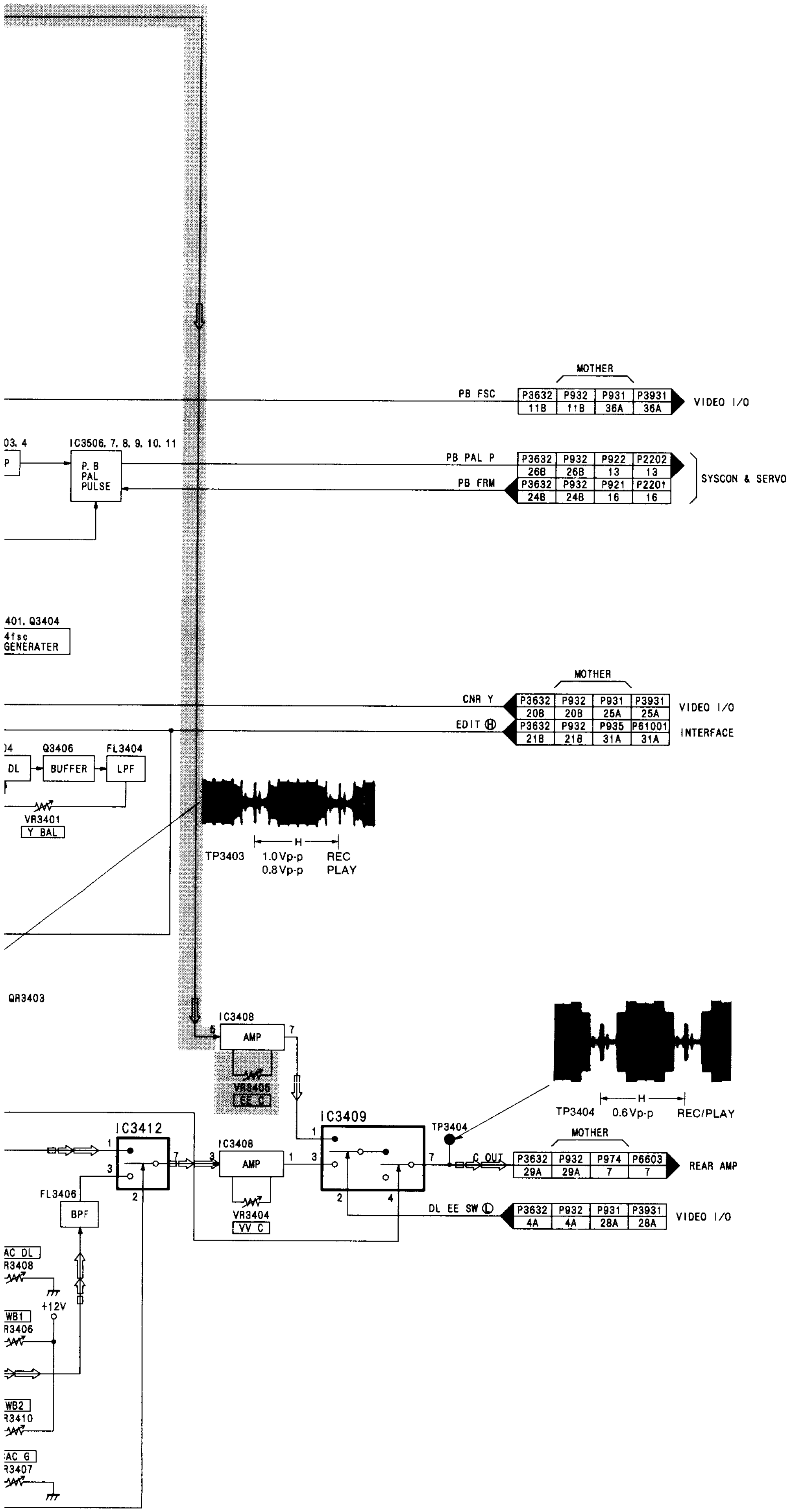

YC REC BLOCK DIAGRAM

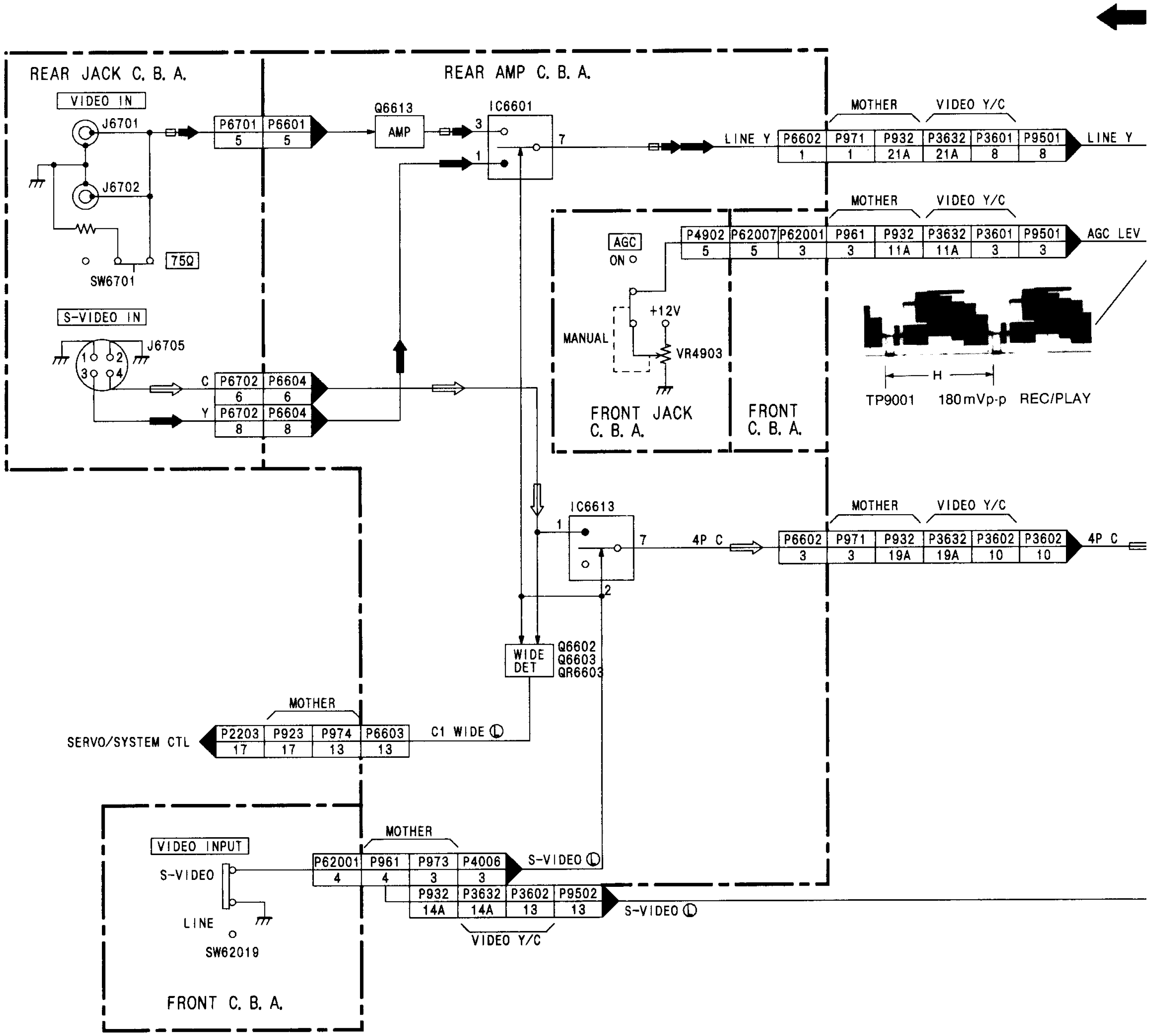

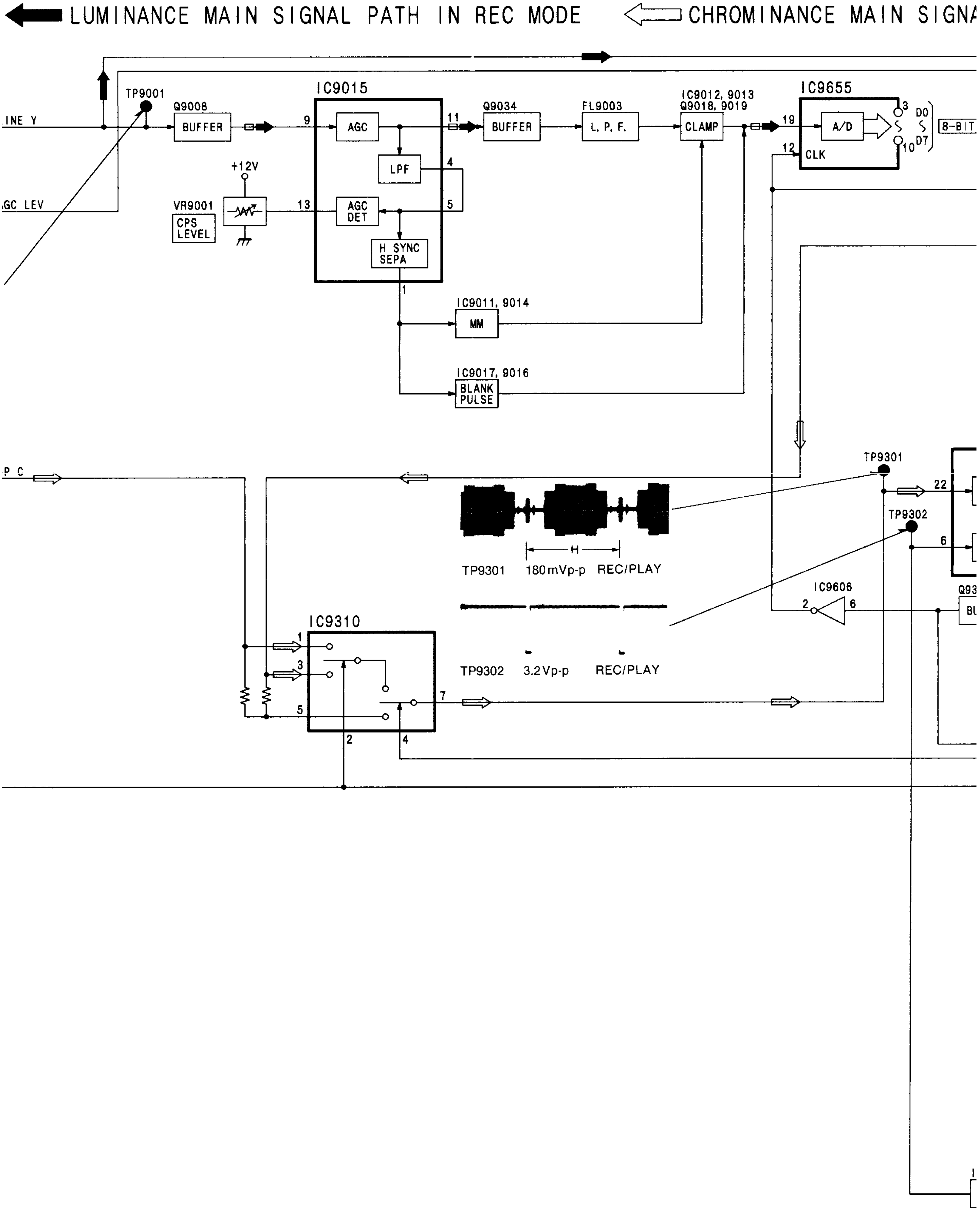
LUMINANCE MAIN SIGNAL PATH IN REC MODE
CHROMINANCE MAIN SIGNA
TP9001
Q9008
BUFFER
IC9015
AGC
LPF
AGC DET
H SYNC SEPA
Q9034
BUFFER
FL9003
L. P. F.
IC9012, 9013
Q9018, 9019
CLAMP
IC9655
A/D
CLK
D0
D7
8-BIT
+12V
VR9001
CPS LEVEL
IC9011, 9014
MM
IC9017, 9016
BLANK PULSE
TP9301
TP9302
TP9301 180mVp-p REC/PLAY
TP9302 3.2Vp-p REC/PLAY
IC9310
IC9606
Q93
BL
H

SIGNAL PATH IN REC MODE ◀ COMPOSITE MAIN SIGNAL PATH IN REC MODE

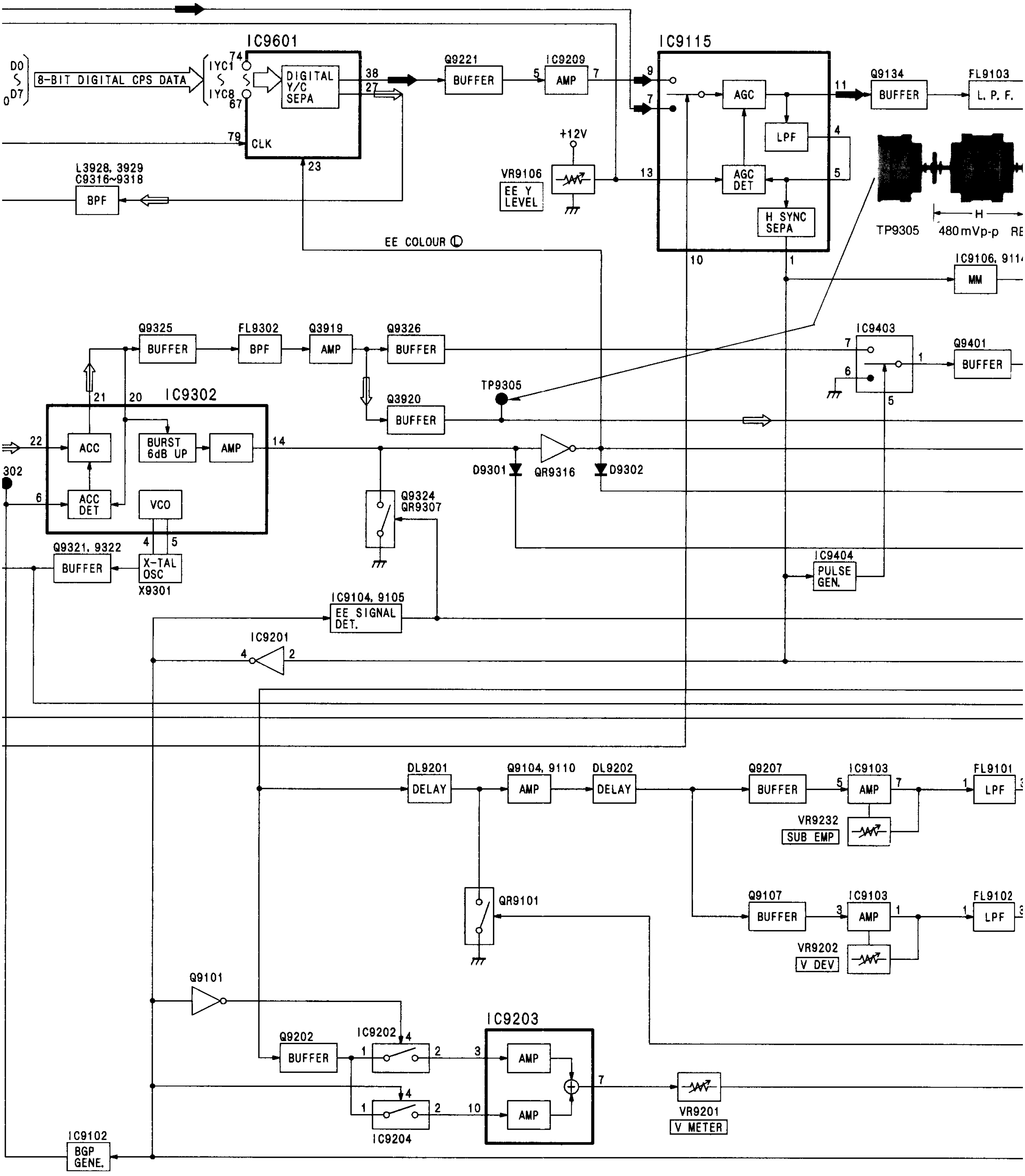

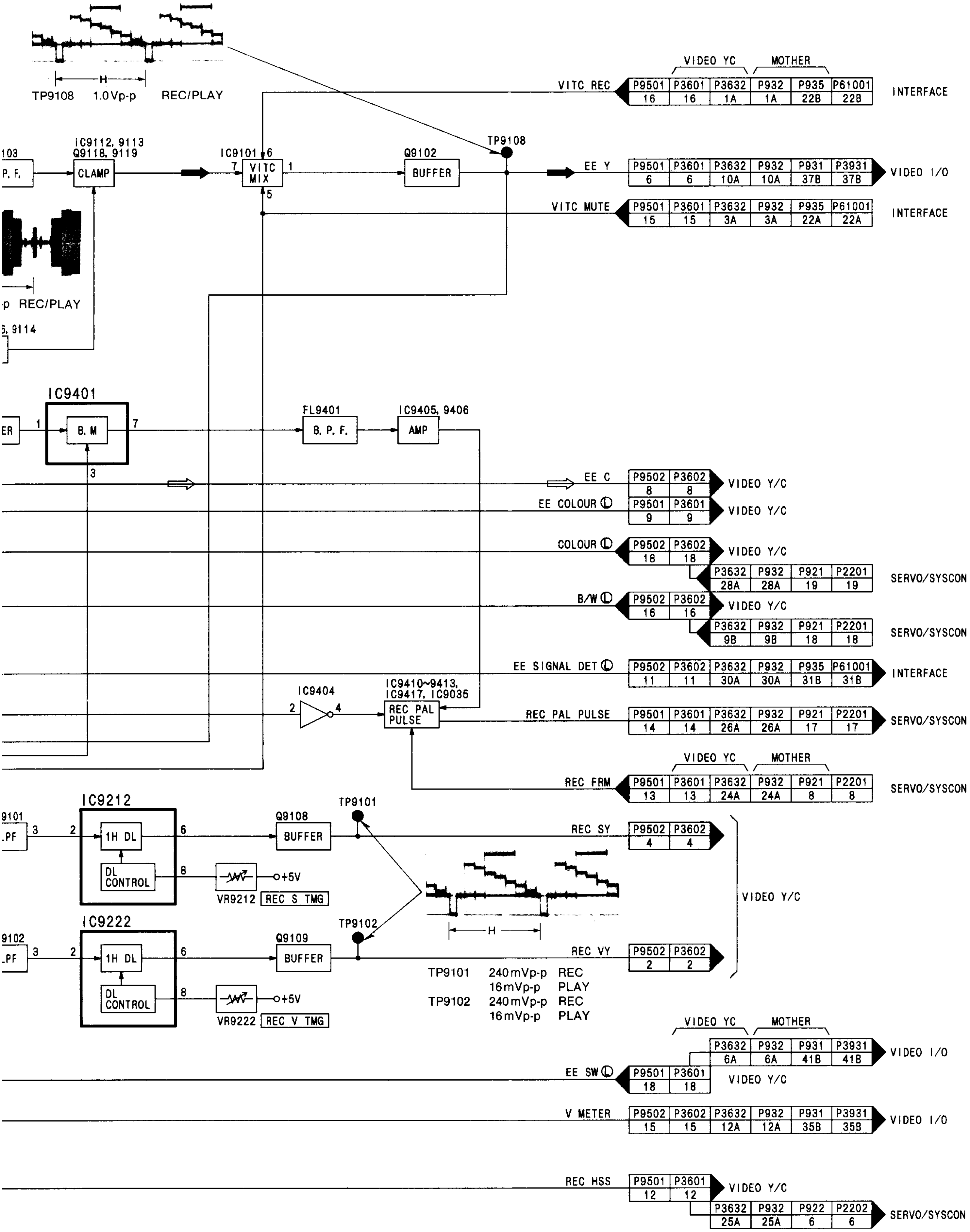
TP9108 1.0Vp-p REC/PLAY
H
VIDEO YC
MOTHER
VITC REC
P9501 P3601 P3632 P932 P935 P61001
16 16 1A 1A 22B 22B
INTERFACE
103
P. F.
IC9112, 9113
Q9118, 9119
CLAMP
IC9101
VITC MIX
Q9102
BUFFER
TP9108
EE Y
P9501 P3601 P3632 P932 P931 P3931
6 6 10A 10A 37B 37B
VIDEO I/O
VITC MUTE
P9501 P3601 P3632 P932 P935 P61001
15 15 3A 3A 22A 22A
INTERFACE
p REC/PLAY
5, 9114
IC9401
ER
B. M
FL9401
B. P. F.
IC9405, 9406
AMP
EE C
P9502 P3602
8 8
VIDEO Y/C
EE COLOUR Ⓛ
P9501 P3601
9 9
VIDEO Y/C
COLOUR Ⓛ
P9502 P3602
18 18
VIDEO Y/C
P3632 P932 P921 P2201
28A 28A 19 19
SERVO/SYSCON
B/W Ⓛ
P9502 P3602
16 16
VIDEO Y/C
P3632 P932 P921 P2201
9B 9B 18 18
SERVO/SYSCON
EE SIGNAL DET Ⓛ
P9502 P3602 P3632 P932 P935 P61001
11 11 30A 30A 31B 31B
INTERFACE
IC9404
IC9410~9413, IC9417, IC9035
REC PAL PULSE
REC PAL PULSE
P9501 P3601 P3632 P932 P921 P2201
14 14 26A 26A 17 17
SERVO/SYSCON
VIDEO YC
MOTHER
REC FRM
P9501 P3601 P3632 P932 P921 P2201
13 13 24A 24A 8 8
SERVO/SYSCON
IC9212
9101
.PF
1H DL
DL CONTROL
Q9108
BUFFER
TP9101
VR9212
REC S TMG
+5V
REC SY
P9502 P3602
4 4
VIDEO Y/C
IC9222
9102
.PF
1H DL
DL CONTROL
Q9109
BUFFER
TP9102
VR9222
REC V TMG
+5V
H
REC VY
P9502 P3602
2 2
TP9101 240mVp-p REC
16mVp-p PLAY
TP9102 240mVp-p REC
16mVp-p PLAY
VIDEO YC
MOTHER
P3632 P932 P931 P3931
6A 6A 41B 41B
VIDEO I/O
EE SW Ⓛ
P9501 P3601
18 18
VIDEO Y/C
V METER
P9502 P3602 P3632 P932 P931 P3931
15 15 12A 12A 35B 35B
VIDEO I/O
REC HSS
P9501 P3601
12 12
VIDEO Y/C
P3632 P932 P922 P2202
25A 25A 6 6
SERVO/SYSCON

VIDEO I/O BLOCK DIAGRAM

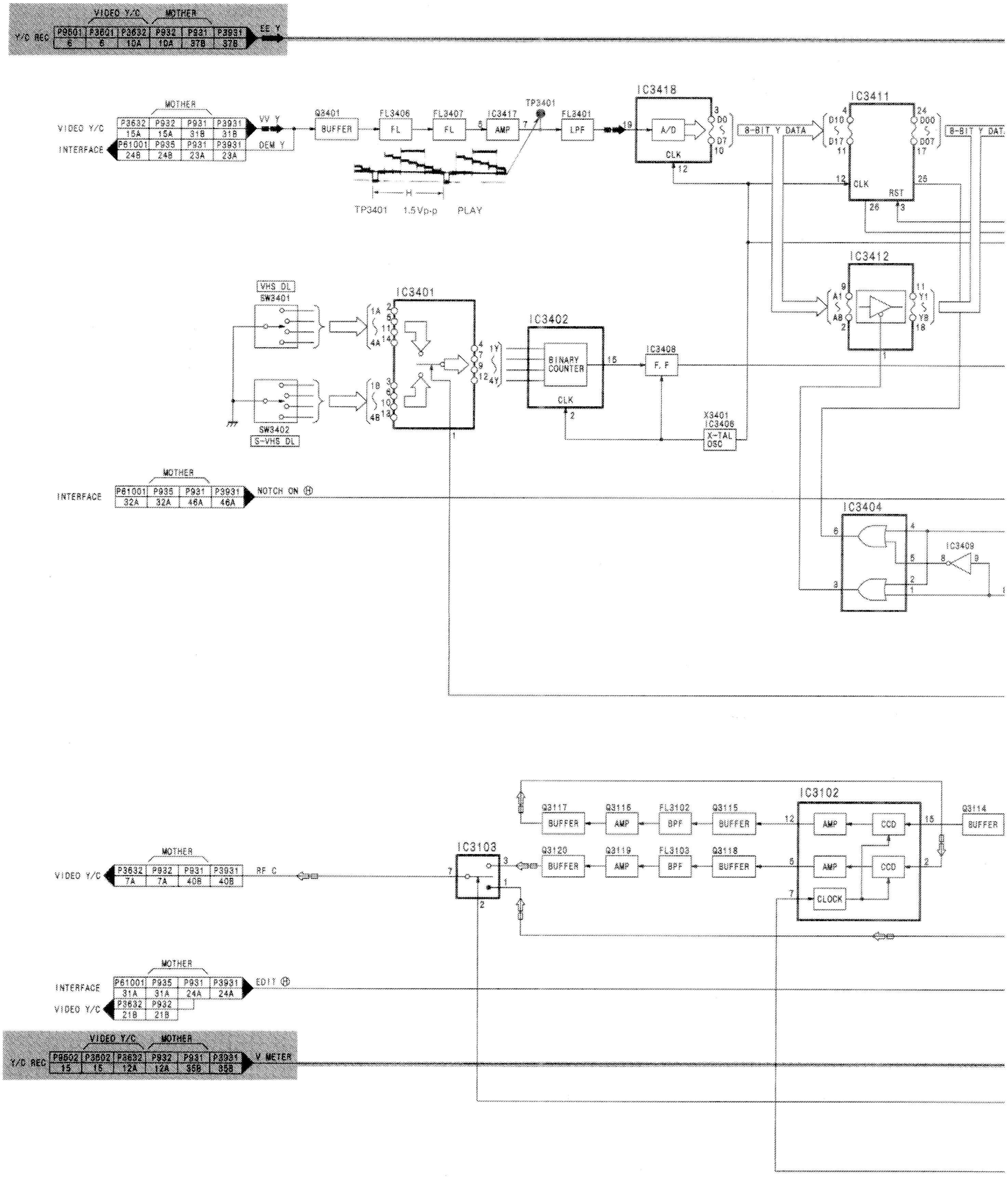

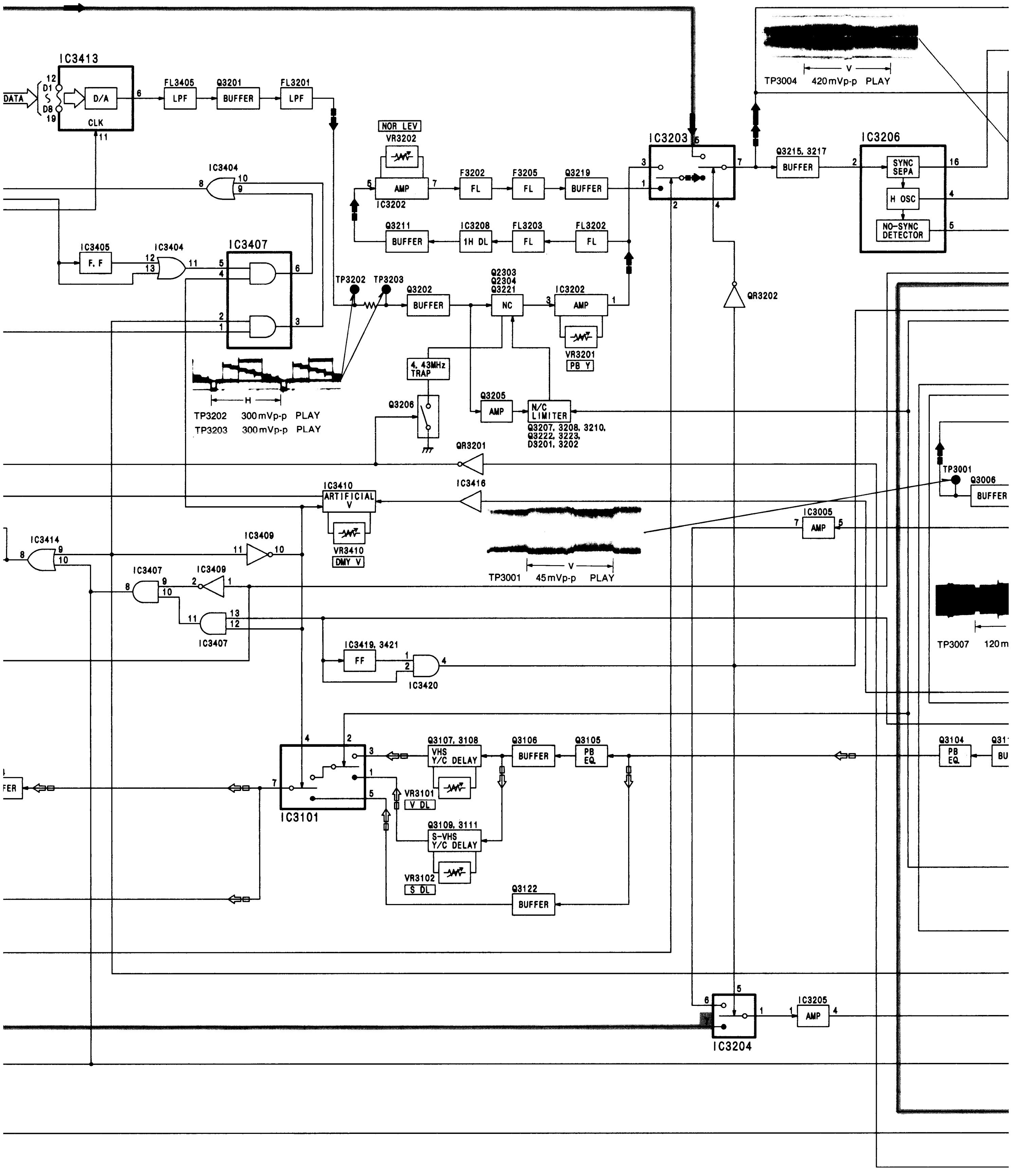

IC3413
DATA
D1
D8
12
19
D/A
CLK
11
6
FL3405
LPF
Q3201
BUFFER
FL3201
LPF
NOR LEV
VR3202
AMP
IC3202
F3202
FL
F3205
FL
Q3219
BUFFER
Q3211
BUFFER
IC3208
1H DL
FL3203
FL
FL3202
FL
IC3203
Q3215, 3217
BUFFER
IC3206
SYNC SEPA
H OSC
NO-SYNC DETECTOR
TP3004 420mVp-p PLAY
IC3404
IC3405
F. F
IC3407
TP3202
TP3203
Q3202
BUFFER
Q2303
Q2304
Q3221
NC
IC3202
AMP
VR3201
PB Y
QR3202
4. 43MHz TRAP
Q3206
Q3205
AMP
N/C LIMITER
Q3207, 3208, 3210,
Q3222, 3223,
D3201, 3202
TP3202 300mVp-p PLAY
TP3203 300mVp-p PLAY
QR3201
IC3416
IC3410
ARTIFICIAL V
VR3410
DMY V
TP3001
Q3006
BUFFER
IC3005
AMP
TP3001 45mVp-p PLAY
TP3007 120m
IC3414
IC3409
IC3407
IC3409
IC3419, 3421
FF
IC3420
IC3101
Q3107, 3108
VHS Y/C DELAY
Q3106
BUFFER
Q3105
PB EQ
Q3104
PB EQ
VR3101
V DL
Q3109, 3111
S-VHS Y/C DELAY
VR3102
S DL
Q3122
BUFFER
IC3204
IC3205
AMP

LUMINANCE MAIN SIGNAL PATH IN REC MODE
LUMINANCE MAIN SIGNAL PATH IN PLAYBACK MODE
CHROMINANCE MAIN SIGNAL P
CHROMINANCE MAIN SIGNAL P

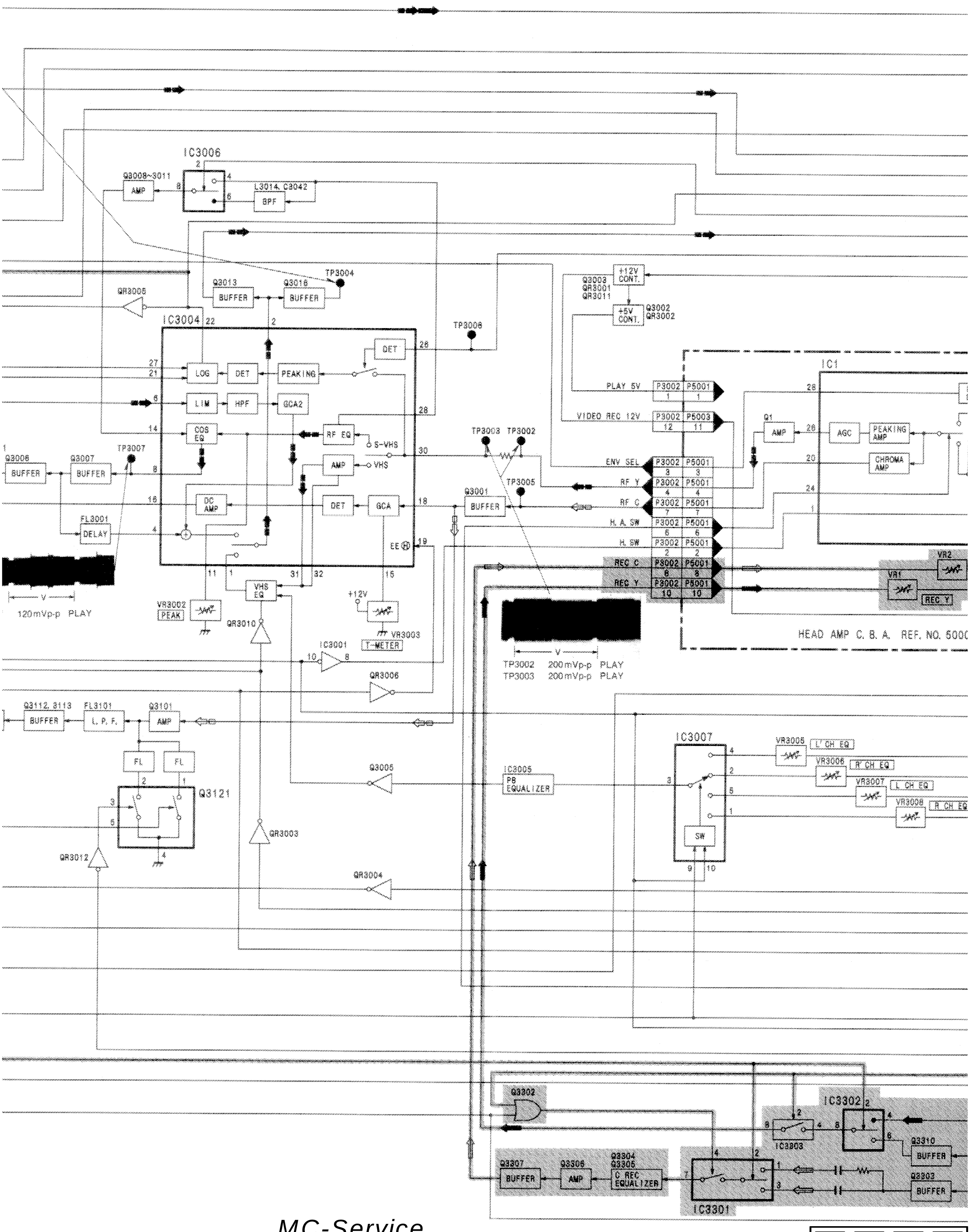

MAIN SIGNAL PATH IN REC MODE
MAIN SIGNAL PATH IN PLAYBACK MODE
COMPOSITE MAIN SIGNAL PATH IN REC MODE
COMPOSITE MAIN SIGNAL PATH IN PLAYBACK MODE

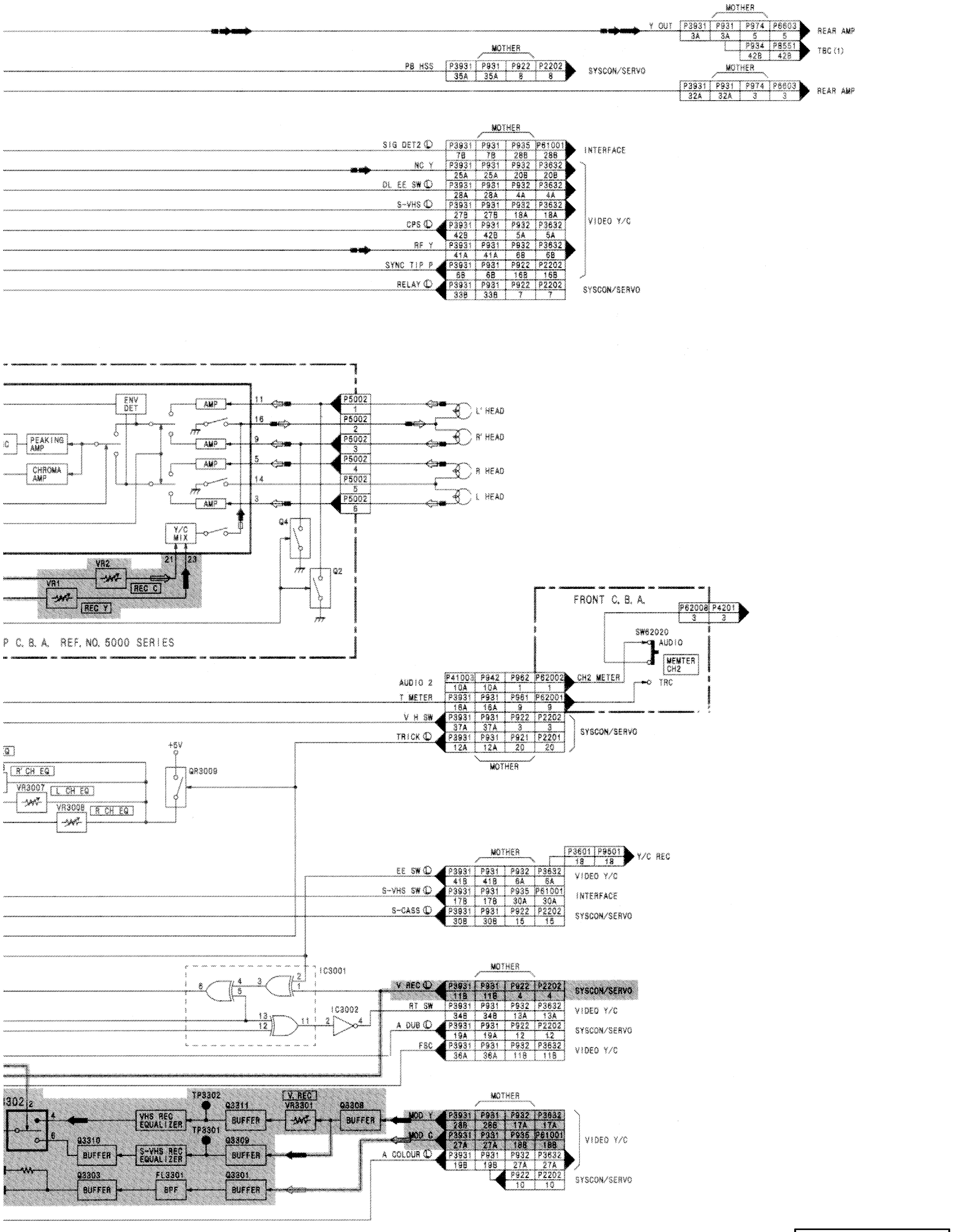

TBC (2) BLOCK DIAGRAM

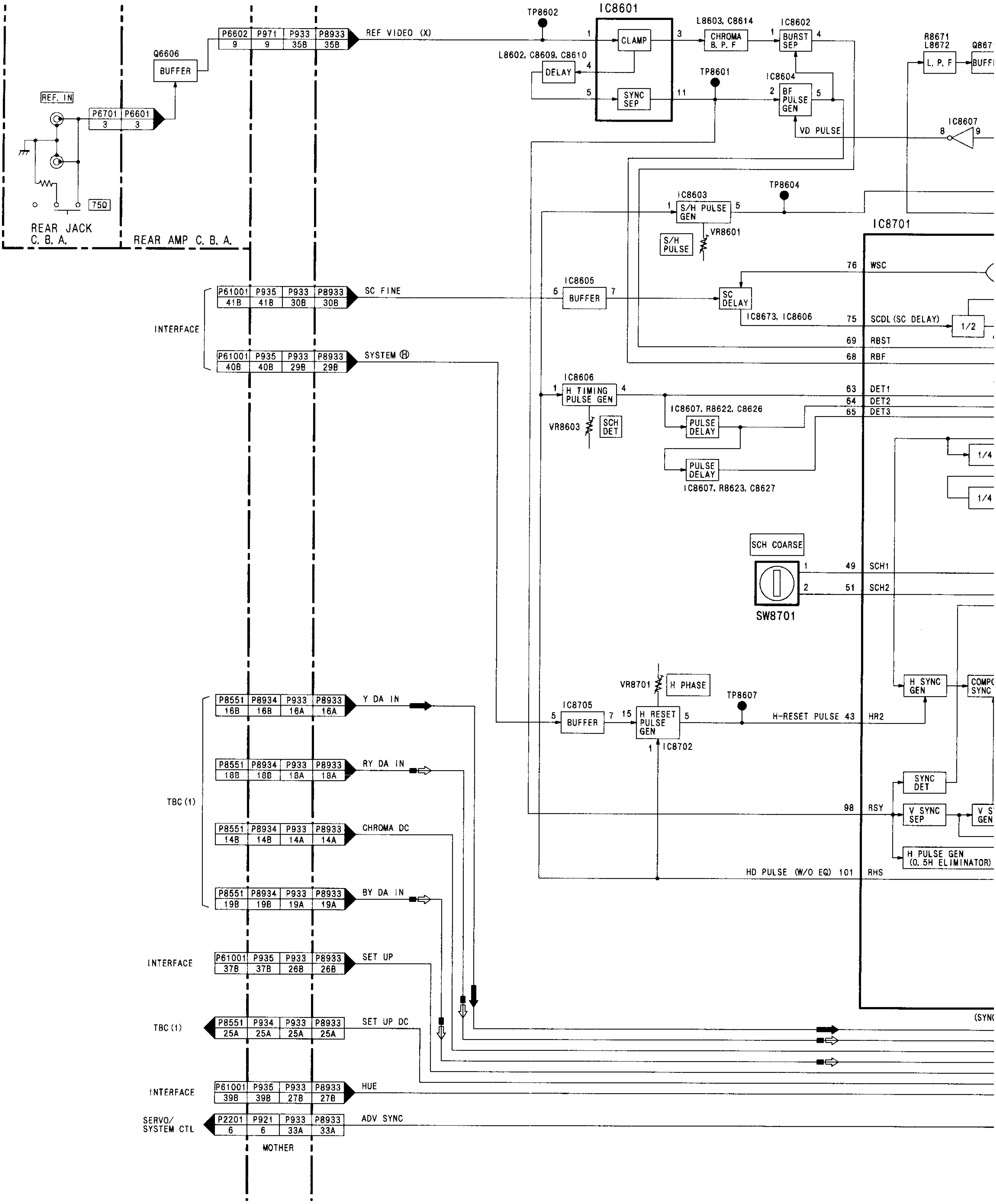

MC-Service

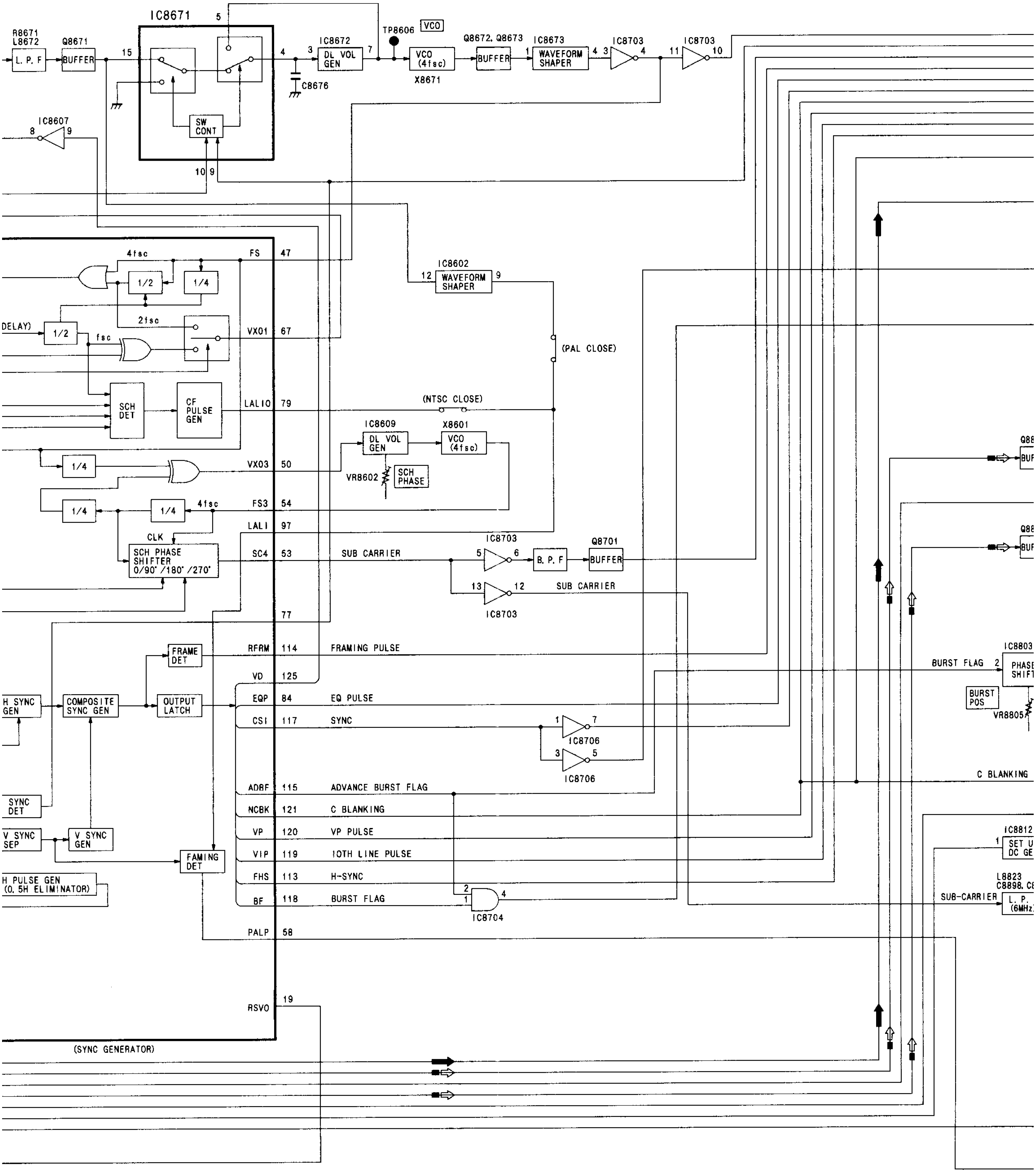
IC8671
R8671
L8672
L.P.F
Q8671
BUFFER
SW CONT
IC8672
DL VOL GEN
TP8606
VCO
C8676
VCO (4fsc)
X8671
Q8672, Q8673
BUFFER
IC8673
WAVEFORM SHAPER
IC8703
IC8607
4fsc
1/2
1/4
2fsc
DELAY)
fsc
SCH DET
CF PULSE GEN
IC8602
WAVEFORM SHAPER
(PAL CLOSE)
(NTSC CLOSE)
IC8609
DL VOL GEN
X8601
VCO (4fsc)
VR8602
SCH PHASE
CLK
SCH PHASE SHIFTER 0/90°/180°/270°
FS 47
VX01 67
LALIO 79
VX03 50
FS3 54
LALI 97
SC4 53
SUB CARRIER
B.P.F
Q8701
BUFFER
IC8703
77
RFRM 114
FRAMING PULSE
FRAME DET
H SYNC GEN
COMPOSITE SYNC GEN
OUTPUT LATCH
VD 125
EQP 84
EQ PULSE
CSI 117
SYNC
IC8706
ADBF 115
ADVANCE BURST FLAG
NCBK 121
C BLANKING
VP 120
VP PULSE
VIP 119
10TH LINE PULSE
FHS 113
H-SYNC
BF 118
BURST FLAG
IC8704
SYNC DET
V SYNC SEP
V SYNC GEN
FAMING DET
H PULSE GEN (0.5H ELIMINATOR)
PALP 58
RSVO 19
(SYNC GENERATOR)
IC8803
BURST FLAG
PHASE SHIFT
BURST POS
VR8805
C BLANKING
IC8812
SET U DC GE
L8823
C8898, C8
SUB-CARRIER
L.P. (6MHz)
Q88
BUF

LUMINANCE MAIN SIGNAL PATH

CHROMINANCE MAIN SIGNAL PATH

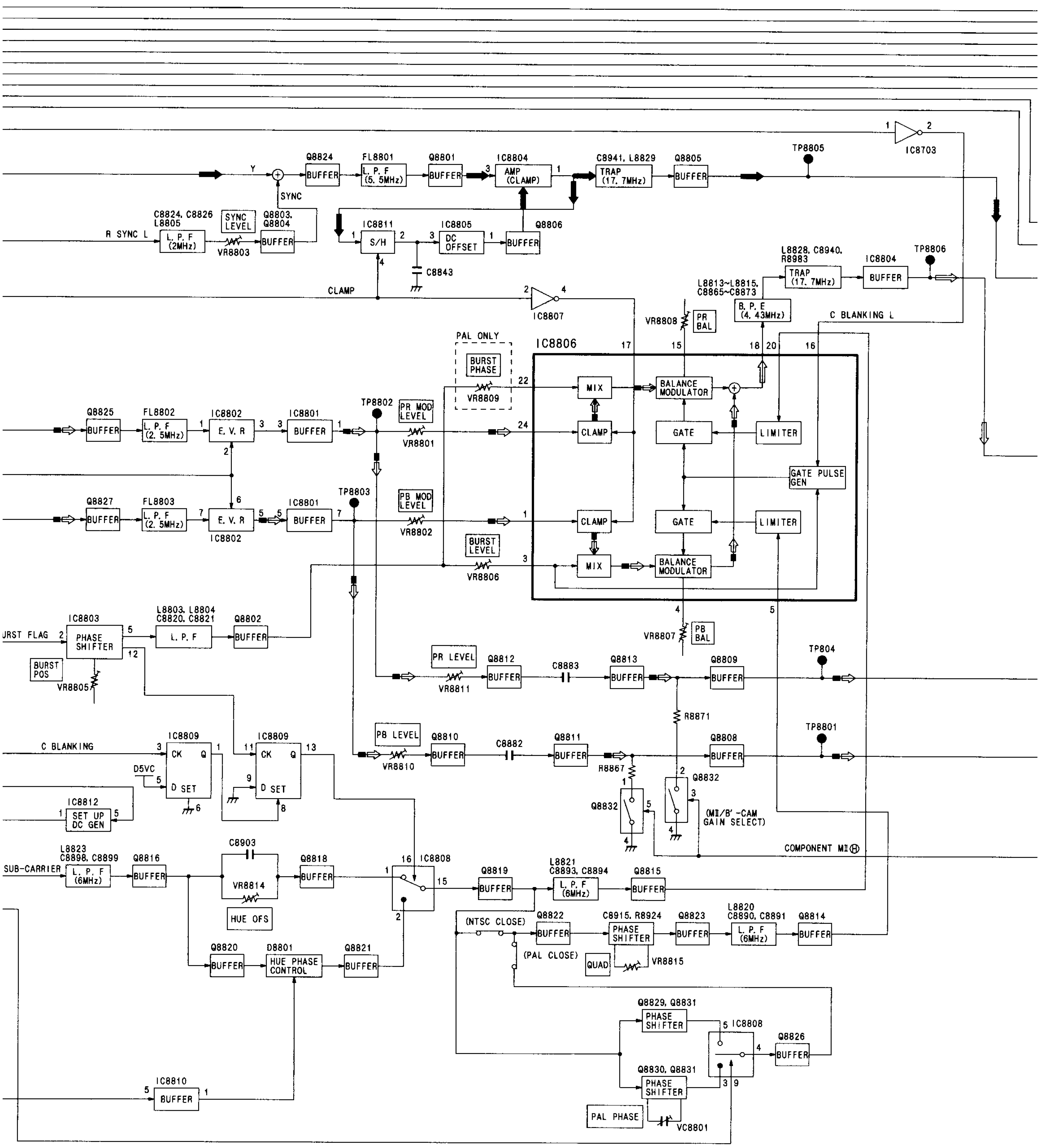

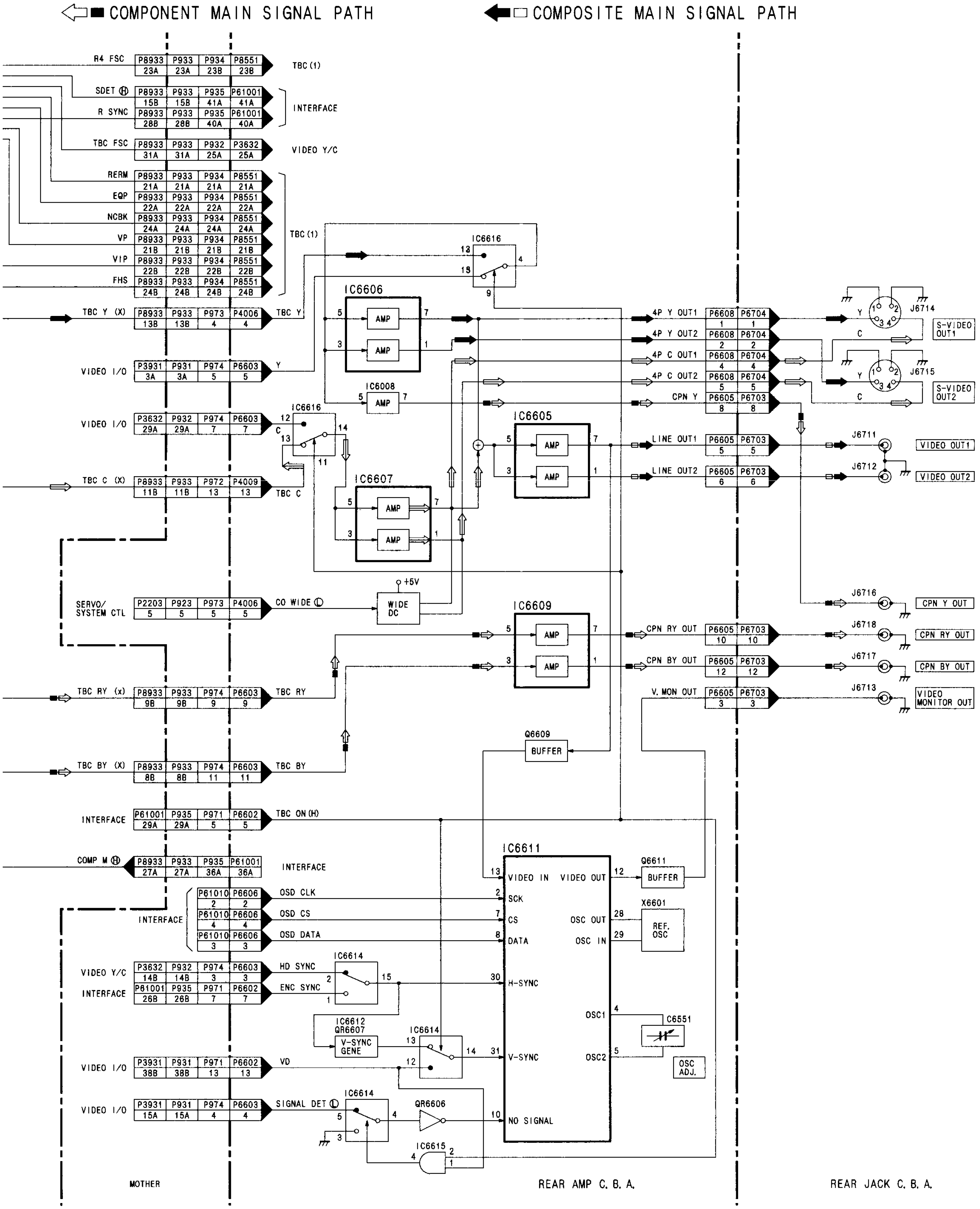
COMPONENT MAIN SIGNAL PATH
COMPOSITE MAIN SIGNAL PATH
R4 FSC
SDET
R SYNC
TBC FSC
RERM
EQP
NCBK
VP
VIP
FHS
TBC Y (X)
VIDEO I/O
TBC C (X)
SERVO/ SYSTEM CTL
TBC RY (x)
TBC BY (X)
INTERFACE
COMP M
VIDEO Y/C
TBC (1)
VIDEO Y/C
TBC Y
Y
C
TBC C
CO WIDE
TBC RY
TBC BY
TBC ON (H)
OSD CLK
OSD CS
OSD DATA
HD SYNC
ENC SYNC
VD
SIGNAL DET
IC6616
IC6606
IC6008
IC6607
IC6605
IC6609
IC6611
IC6614
IC6612
QR6607
IC6615
QR6606
Q6609
Q6611
X6601
C6551
AMP
WIDE DC
+5V
BUFFER
V-SYNC GENE
VIDEO IN
VIDEO OUT
SCK
CS
DATA
OSC OUT
OSC IN
H-SYNC
V-SYNC
OSC1
OSC2
NO SIGNAL
REF. OSC
OSC ADJ.
4P Y OUT1
4P Y OUT2
4P C OUT1
4P C OUT2
CPN Y
LINE OUT1
LINE OUT2
CPN RY OUT
CPN BY OUT
V. MON OUT
J6714
J6715
J6711
J6712
J6716
J6718
J6717
J6713
S-VIDEO OUT1
S-VIDEO OUT2
VIDEO OUT1
VIDEO OUT2
CPN Y OUT
CPN RY OUT
CPN BY OUT
VIDEO MONITOR OUT
MOTHER
REAR AMP C. B. A.
REAR JACK C. B. A.

MC-Service

TBC (1) BLOCK DIAGRAM

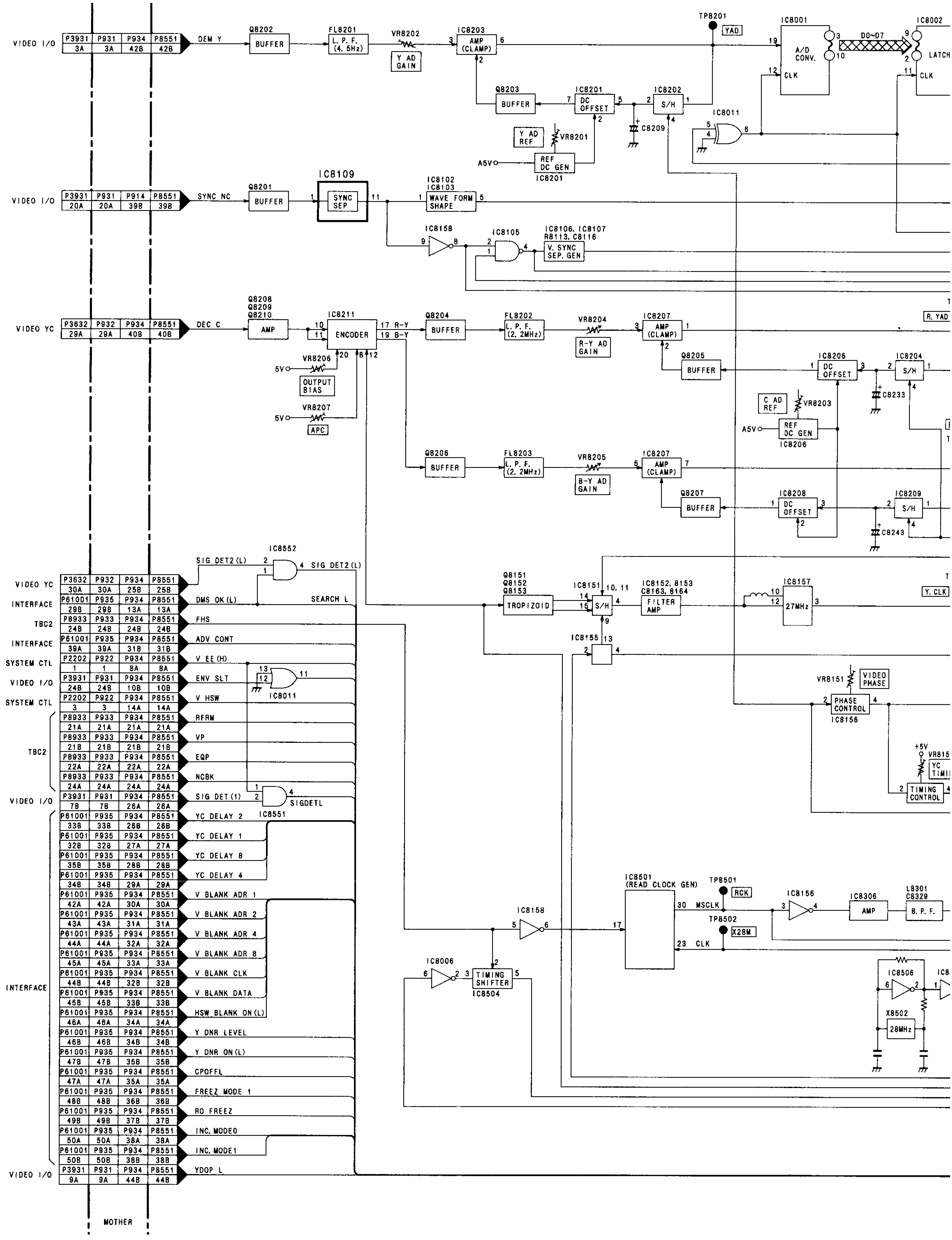

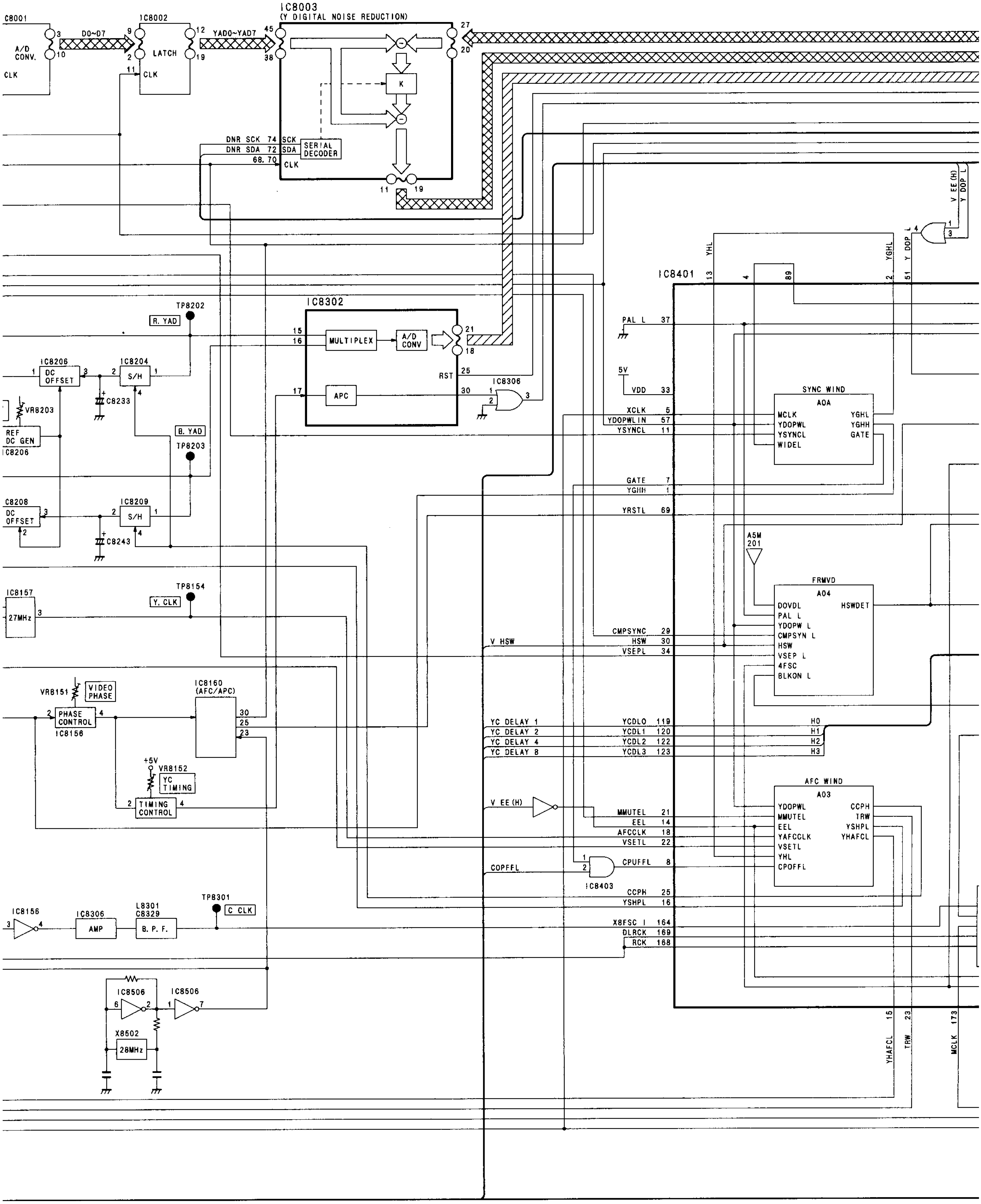
IC8003
(Y DIGITAL NOISE REDUCTION)
A/D CONV.
CLK
D0~D7
IC8002
LATCH
YAD0~YAD7
K
SERIAL DECODER
DNR SCK
DNR SDA
SCK
SDA
IC8302
MULTIPLEX
A/D CONV
APC
RST
IC8306
IC8401
TP8202
R. YAD
IC8206
DC OFFSET
IC8204
S/H
C8233
VR8203
REF DC GEN
B. YAD
TP8203
IC8209
C8243
IC8157
27MHz
TP8154
Y. CLK
VR8151
VIDEO PHASE
PHASE CONTROL
IC8156
IC8160
(AFC/APC)
+5V
VR8152
YC TIMING
TIMING CONTROL
IC8306
AMP
L8301
C8329
B. P. F.
TP8301
C CLK
IC8506
X8502
28MHz
PAL L
5V
VDD
XCLK
YDOPWLIN
YSYNCL
GATE
YGHH
YRSTL
SYNC WIND
A0A
MCLK
YDOPWL
YSYNCL
WIDEL
YGHL
YGHH
GATE
A5M
201
FRMVD
A04
DOVDL
PAL L
YDOPW L
CMPSYN L
HSW
VSEP L
4FSC
BLKON L
HSWDET
V HSW
CMPSYNC
HSW
VSEPL
YC DELAY 1
YC DELAY 2
YC DELAY 4
YC DELAY 8
YCDL0
YCDL1
YCDL2
YCDL3
H0
H1
H2
H3
V EE(H)
MMUTEL
EEL
AFCCLK
VSETL
AFC WIND
A03
YDOPWL
MMUTEL
EEL
YAFCCLK
VSETL
YHL
CPOFFL
CCPH
TRW
YSHPL
YHAFCL
COPFFL
IC8403
CPUFFL
CCPH
YSHPL
X8FSC I
DLRCK
RCK
YHL
YGHL
Y DOP L
V EE(H)
Y DOP L
YHAFCL
TRW
MCLK

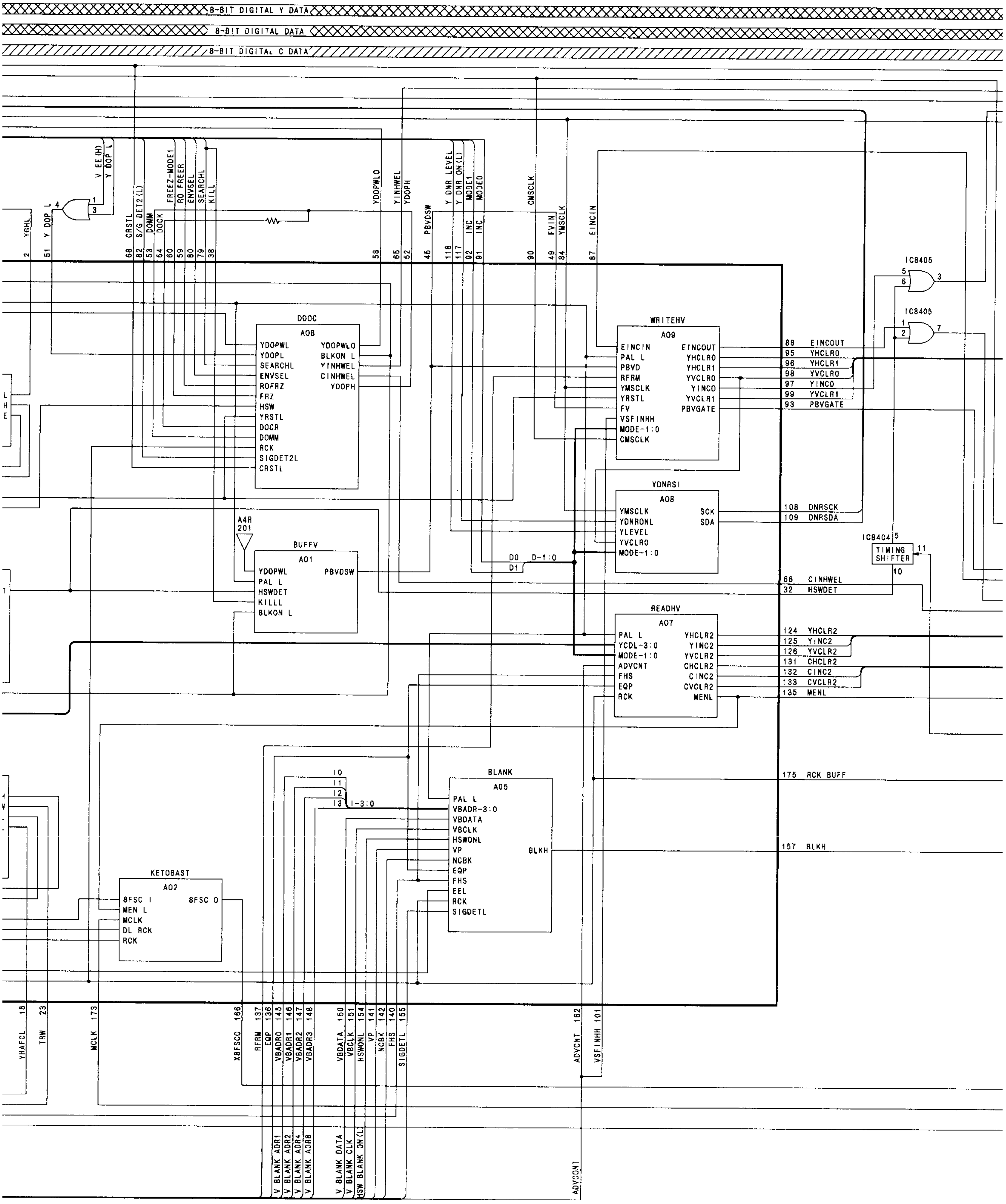
8-BIT DIGITAL Y DATA
8-BIT DIGITAL DATA
8-BIT DIGITAL C DATA
V EE(H)
Y DOP L
YGHL
Y DOP L
CRSTL
S/G DET2(L)
DOMM
DOCK
FREEZ-MODE1
RO FREER
ENVSEL
SEARCHL
KILL
YDOPWLO
YINHWEL
YDOPH
PBVDSW
Y DNR LEVEL
Y DNR ON(L)
MODE1
MODE0
INC
INC
CMSCLK
FVIN
YMSCLK
EINCIN
IC8405
IC8405
DDOC
A08
YDOPWL
YDOPL
SEARCHL
ENVSEL
ROFRZ
FRZ
HSW
YRSTL
DOCR
DOMM
RCK
SIGDET2L
CRSTL
YDOPWLO
BLKON L
YINHWEL
CINHWEL
YDOPH
WRITEHV
A09
EINCIN
PAL L
PBVD
RFRM
YMSCLK
YRSTL
FV
VSFINHH
MODE-1:0
CMSCLK
EINCOUT
YHCLR0
YHCLR1
YVCLR0
YINC0
YVCLR1
PBVGATE
88 EINCOUT
95 YHCLR0
96 YHCLR1
98 YVCLR0
97 YINC0
99 YVCLR1
93 PBVGATE
YDNRS1
A08
YMSCLK
YDNRONL
YLEVEL
YVCLR0
MODE-1:0
SCK
SDA
108 DNRSCK
109 DNRSDA
IC8404
TIMING SHIFTER
A4R 201
BUFFV
A01
YDOPWL
PAL L
HSWDET
KILLL
BLKON L
PBVDSW
D0
D1
D-1:0
66 CINHWEL
32 HSWDET
READHV
A07
PAL L
YCDL-3:0
MODE-1:0
ADVCNT
FHS
EQP
RCK
YHCLR2
YINC2
YVCLR2
CHCLR2
CINC2
CVCLR2
MENL
124 YHCLR2
125 YINC2
126 YVCLR2
131 CHCLR2
132 CINC2
133 CVCLR2
135 MENL
175 RCK BUFF
BLANK
A05
PAL L
VBADR-3:0
VBDATA
VBCLK
HSWONL
VP
NCBK
EQP
FHS
EEL
RCK
SIGDETL
BLKH
157 BLKH
I-3:0
KETOBAST
A02
8FSC I
MEN L
MCLK
DL RCK
RCK
8FSC O
YHAFCL 15
TRW 23
MCLK 173
X8FSCO 166
RFRM 137
EQP 136
VBADR0 145
VBADR1 146
VBADR2 147
VBADR3 148
VBDATA 150
VBCLK 151
HSWONL 154
VP 141
NCBK 142
FHS 140
SIGDETL 155
ADVCNT 162
VSFINHH 101
V BLANK ADR1
V BLANK ADR2
V BLANK ADR4
V BLANK ADR8
V BLANK DATA
V BLANK CLK
HSW BLANK ON(L)
ADVCONT

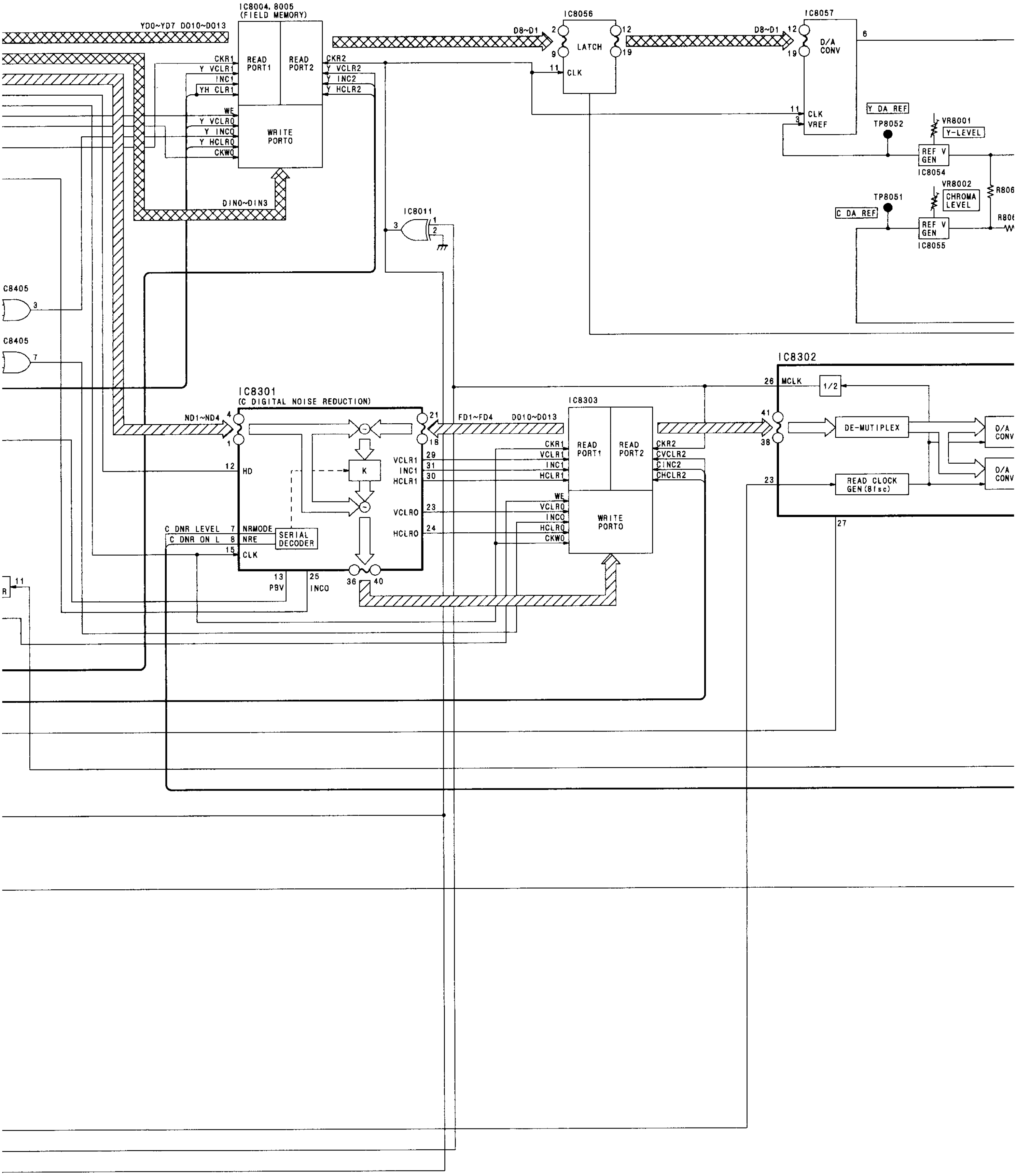
IC8004, 8005 (FIELD MEMORY)
YD0~YD7 DO10~DO13
READ PORT1
READ PORT2
WRITE PORT0
DIN0~DIN3
IC8056
LATCH
D8~D1
IC8057
D/A CONV
Y DA REF
TP8052
VR8001
Y-LEVEL
REF V GEN
IC8054
VR8002
CHROMA LEVEL
TP8051
C DA REF
IC8055
IC8011
IC8405
IC8301
(C DIGITAL NOISE REDUCTION)
ND1~ND4
FD1~FD4
SERIAL DECODER
C DNR LEVEL
C DNR ON L
NRMODE
NRE
CLK
HD
PBV
INCO
IC8303
IC8302
MCLK
1/2
DE-MUTIPLEX
READ CLOCK GEN (8fsc)
D/A CONV

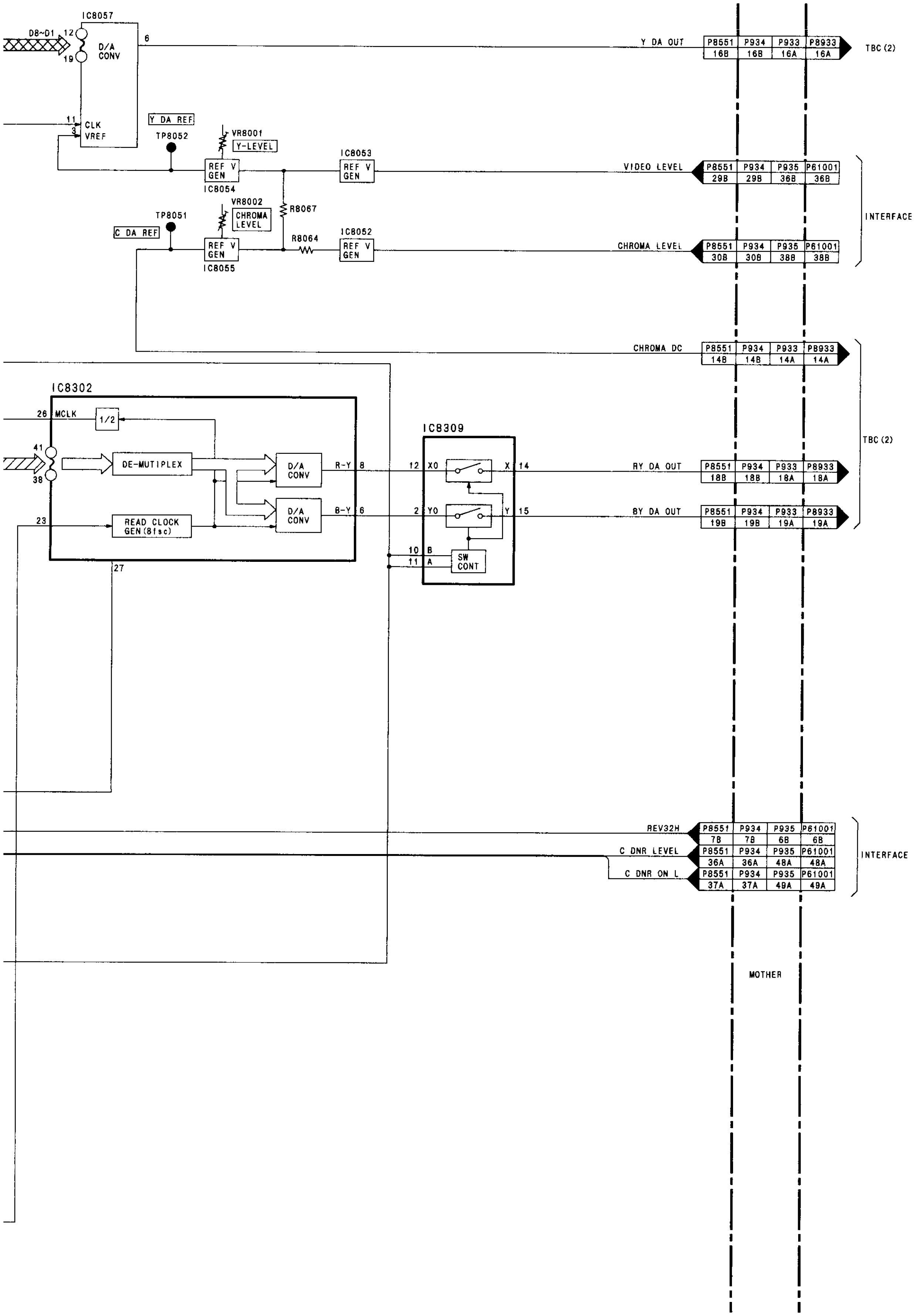
IC8057
D8~D1
D/A CONV
CLK
VREF
Y DA REF
TP8052
VR8001
Y-LEVEL
REF V GEN
IC8054
IC8053
VR8002
CHROMA LEVEL
R8067
TP8051
C DA REF
R8064
IC8052
IC8055
Y DA OUT
VIDEO LEVEL
CHROMA LEVEL
CHROMA DC
TBC (2)
INTERFACE
IC8302
MCLK
1/2
DE-MUTIPLEX
READ CLOCK GEN (8fsc)
R-Y
B-Y
IC8309
SW CONT
RY DA OUT
BY DA OUT
REV32H
C DNR LEVEL
C DNR ON L
MOTHER

INTERFACE BLOCK DIAGRAM

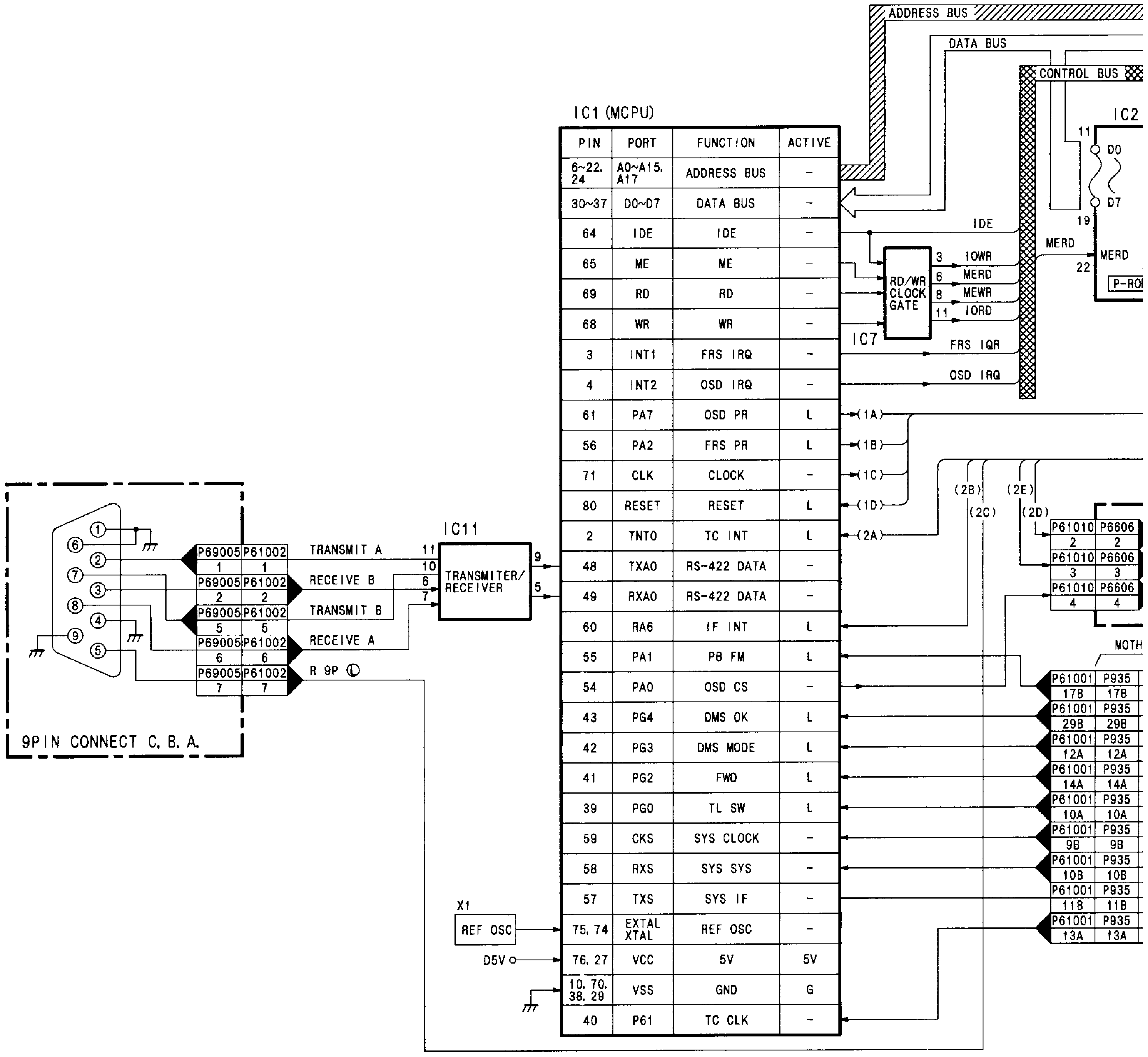

REF. NO. 61000 SERIES

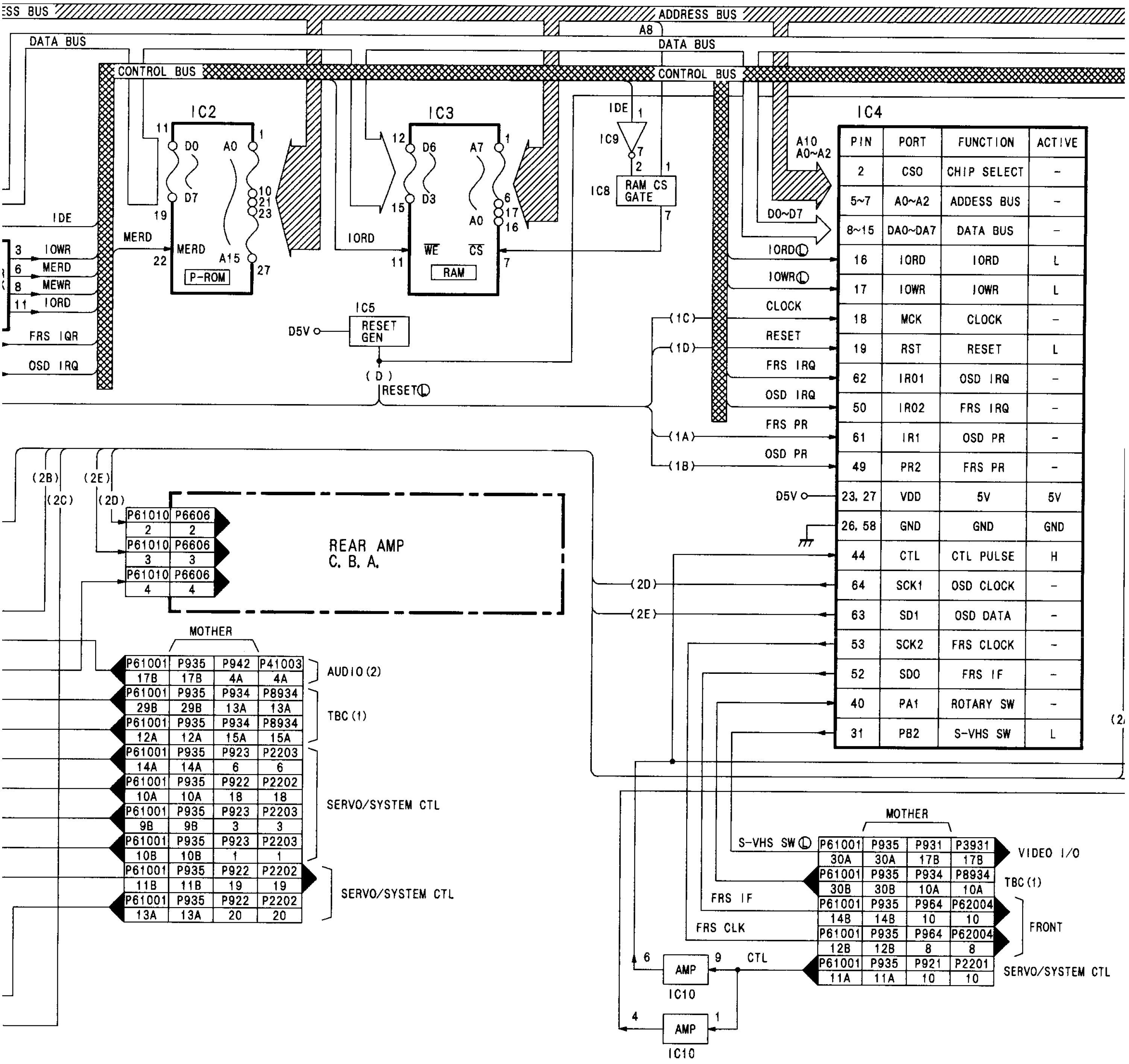

PIN	PORT	FUNCTION	ACTIVE
2	CS0	CHIP SELECT	–
5~7	A0~A2	ADDESS BUS	–
8~15	DA0~DA7	DATA BUS	–
16	IORD	IORD	L
17	IOWR	IOWR	L
18	MCK	CLOCK	–
19	RST	RESET	L
62	IR01	OSD IRQ	–
50	IR02	FRS IRQ	–
61	IR1	OSD PR	–
49	PR2	FRS PR	–
23, 27	VDD	5V	5V
26, 58	GND	GND	GND
44	CTL	CTL PULSE	H
64	SCK1	OSD CLOCK	–
63	SD1	OSD DATA	–
53	SCK2	FRS CLOCK	–
52	SDO	FRS IF	–
40	PA1	ROTARY SW	–
31	PB2	S-VHS SW	L

NO. 61000 SERIES

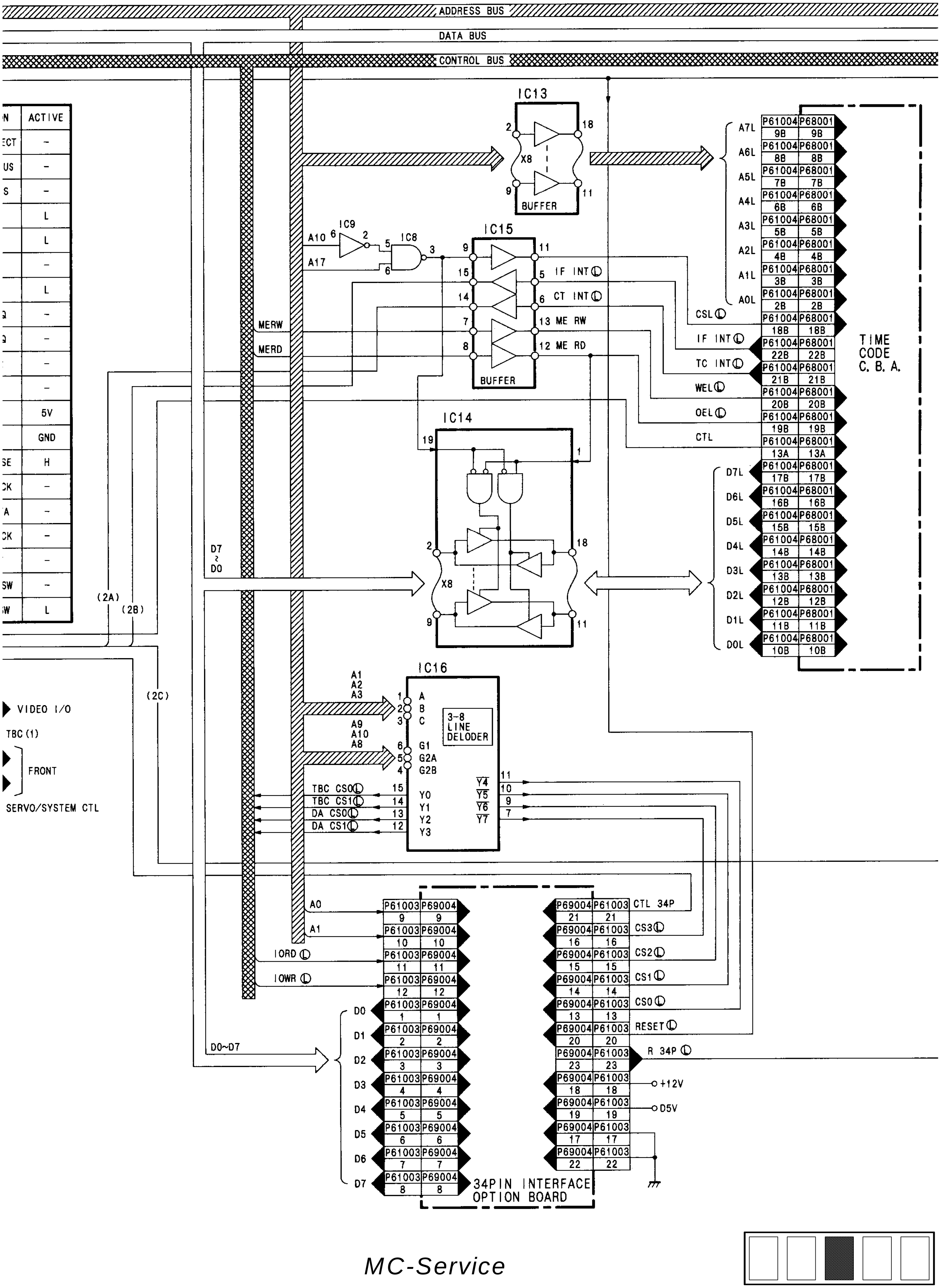

ADDRESS BUS
DATA BUS
CONTROL BUS
IC13
BUFFER
X8
IC15
IC9
IC8
A10
A17
IF INT
CT INT
13 ME RW
12 ME RD
MERW
MERD
BUFFER
IC14
D7 ~ D0
X8
IC16
A1 A2 A3
A9 A10 A8
3-8 LINE DELODER
A B C G1 G2A G2B
Y0 Y1 Y2 Y3
Y4 Y5 Y6 Y7
TBC CS0
TBC CS1
DA CS0
DA CS1
ACTIVE
5V
GND
H
L
(2A)
(2B)
(2C)
VIDEO I/O
TBC (1)
FRONT
SERVO/SYSTEM CTL
A7L A6L A5L A4L A3L A2L A1L A0L
CSL
IF INT
TC INT
WEL
OEL
CTL
D7L D6L D5L D4L D3L D2L D1L D0L
P61004 P68001
TIME CODE C. B. A.
A0
A1
IORD
IOWR
D0~D7
D0 D1 D2 D3 D4 D5 D6 D7
P61003 P69004
CTL 34P
CS3
CS2
CS1
CS0
RESET
R 34P
+12V
D5V
34PIN INTERFACE OPTION BOARD

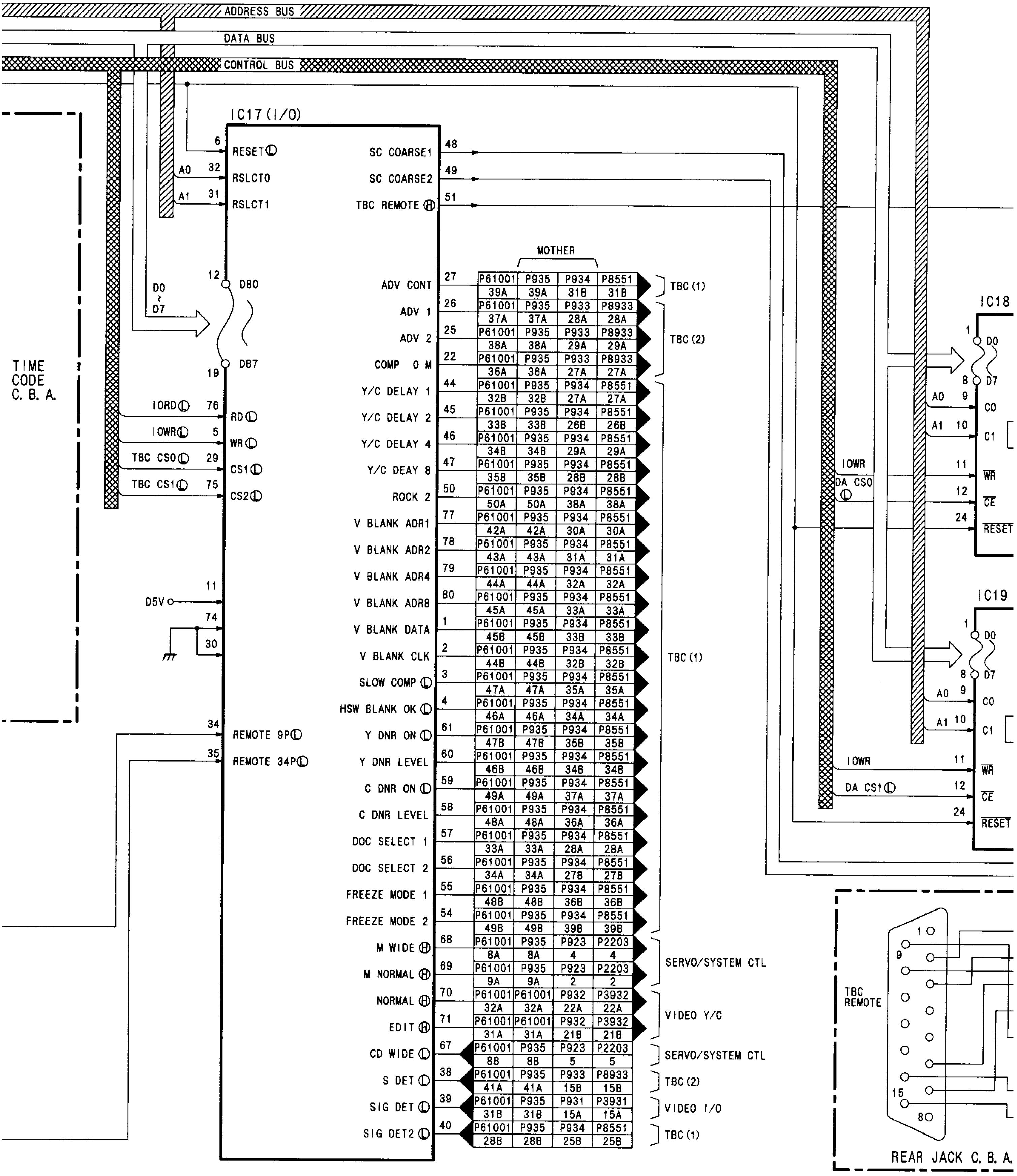
ADDRESS BUS
DATA BUS
CONTROL BUS
IC17 (I/O)
6 RESET Ⓛ
A0 32 RSLCT0
A1 31 RSLCT1
D0 ~ D7
12 DB0
19 DB7
IORD Ⓛ 76 RD Ⓛ
IOWR Ⓛ 5 WR Ⓛ
TBC CS0 Ⓛ 29 CS1 Ⓛ
TBC CS1 Ⓛ 75 CS2 Ⓛ
D5V 11
74
30
34 REMOTE 9P Ⓛ
35 REMOTE 34P Ⓛ
TIME CODE C. B. A.
SC COARSE1 48
SC COARSE2 49
TBC REMOTE Ⓗ 51
MOTHER
ADV CONT 27 P61001 39A P935 39A P934 31B P8551 31B TBC (1)
ADV 1 26 P61001 37A P935 37A P933 28A P8933 28A
ADV 2 25 P61001 38A P935 38A P933 29A P8933 29A
COMP 0 M 22 P61001 36A P935 36A P933 27A P8933 27A TBC (2)
Y/C DELAY 1 44 P61001 32B P935 32B P934 27A P8551 27A
Y/C DELAY 2 45 P61001 33B P935 33B P934 26B P8551 26B
Y/C DELAY 4 46 P61001 34B P935 34B P934 29A P8551 29A
Y/C DEAY 8 47 P61001 35B P935 35B P934 28B P8551 28B
ROCK 2 50 P61001 50A P935 50A P934 38A P8551 38A
V BLANK ADR1 77 P61001 42A P935 42A P934 30A P8551 30A
V BLANK ADR2 78 P61001 43A P935 43A P934 31A P8551 31A
V BLANK ADR4 79 P61001 44A P935 44A P934 32A P8551 32A
V BLANK ADR8 80 P61001 45A P935 45A P934 33A P8551 33A
V BLANK DATA 1 P61001 45B P935 45B P934 33B P8551 33B
V BLANK CLK 2 P61001 44B P935 44B P934 32B P8551 32B
SLOW COMP Ⓛ 3 P61001 47A P935 47A P934 35A P8551 35A
HSW BLANK OK Ⓛ 4 P61001 46A P935 46A P934 34A P8551 34A
Y DNR ON Ⓛ 61 P61001 47B P935 47B P934 35B P8551 35B
Y DNR LEVEL 60 P61001 46B P935 46B P934 34B P8551 34B
C DNR ON Ⓛ 59 P61001 49A P935 49A P934 37A P8551 37A
C DNR LEVEL 58 P61001 48A P935 48A P934 36A P8551 36A
DOC SELECT 1 57 P61001 33A P935 33A P934 28A P8551 28A
DOC SELECT 2 56 P61001 34A P935 34A P934 27B P8551 27B
FREEZE MODE 1 55 P61001 48B P935 48B P934 36B P8551 36B
FREEZE MODE 2 54 P61001 49B P935 49B P934 39B P8551 39B
TBC (1)
M WIDE Ⓗ 68 P61001 8A P935 8A P923 4 P2203 4
M NORMAL Ⓗ 69 P61001 9A P935 9A P923 2 P2203 2 SERVO/SYSTEM CTL
NORMAL Ⓗ 70 P61001 32A P61001 32A P932 22A P3932 22A
EDIT Ⓗ 71 P61001 31A P61001 31A P932 21B P3932 21B VIDEO Y/C
CD WIDE Ⓛ 67 P61001 8B P935 8B P923 5 P2203 5 SERVO/SYSTEM CTL
S DET Ⓛ 38 P61001 41A P935 41A P933 15B P8933 15B TBC (2)
SIG DET Ⓛ 39 P61001 31B P935 31B P931 15A P3931 15A VIDEO I/O
SIG DET2 Ⓛ 40 P61001 28B P935 28B P934 25B P8551 25B TBC (1)
IC18
1 D0
8 D7
A0 9 C0
A1 10 C1
IOWR 11 WR
DA CS0 Ⓛ 12 CE
24 RESET
IC19
1 D0
8 D7
A0 9 C0
A1 10 C1
IOWR 11 WR
DA CS1 Ⓛ 12 CE
24 RESET
TBC REMOTE
1 9 15 8
REAR JACK C. B. A.

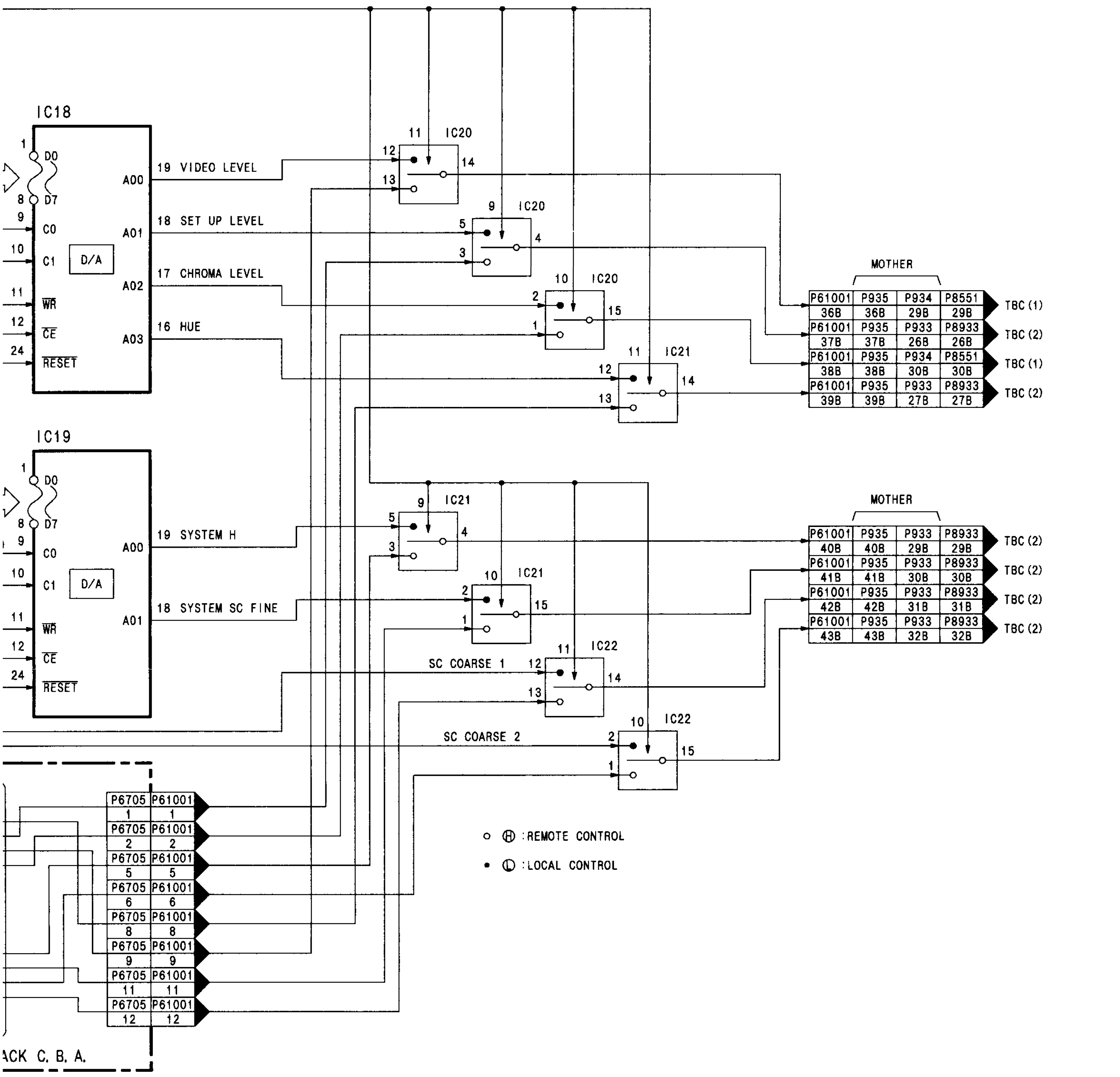
IC18
D0
D7
C0
C1
D/A
WR
CE
RESET
A00
A01
A02
A03
19 VIDEO LEVEL
18 SET UP LEVEL
17 CHROMA LEVEL
16 HUE
IC20
IC21
IC19
19 SYSTEM H
18 SYSTEM SC FINE
SC COARSE 1
SC COARSE 2
IC22
MOTHER
P61001 P935 P934 P8551
TBC (1)
TBC (2)
P6705 P61001
ACK C. B. A.
○ Ⓗ :REMOTE CONTROL
● Ⓛ :LOCAL CONTROL

NORMAL AUDIO BLOCK DIAGRAM

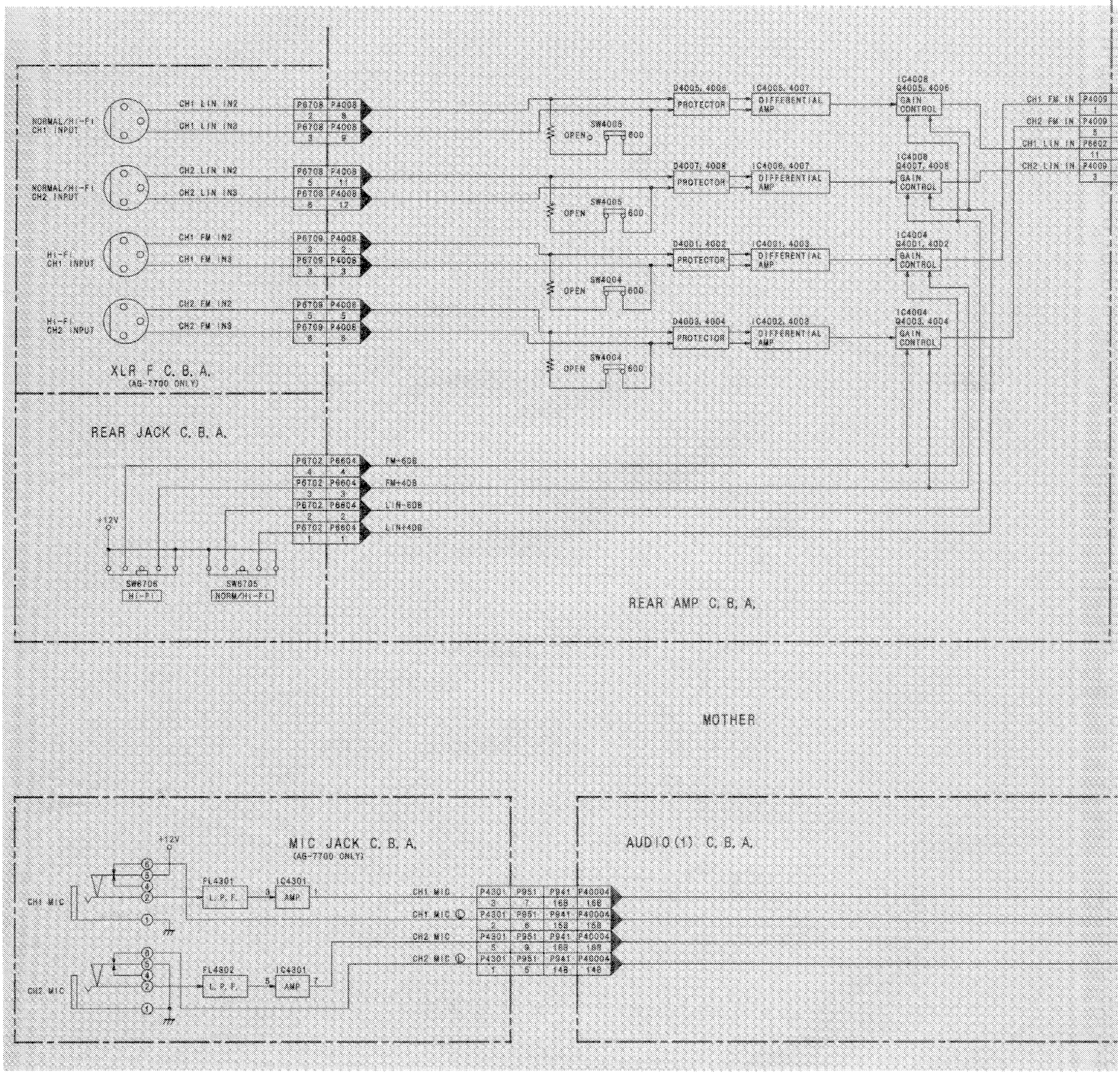

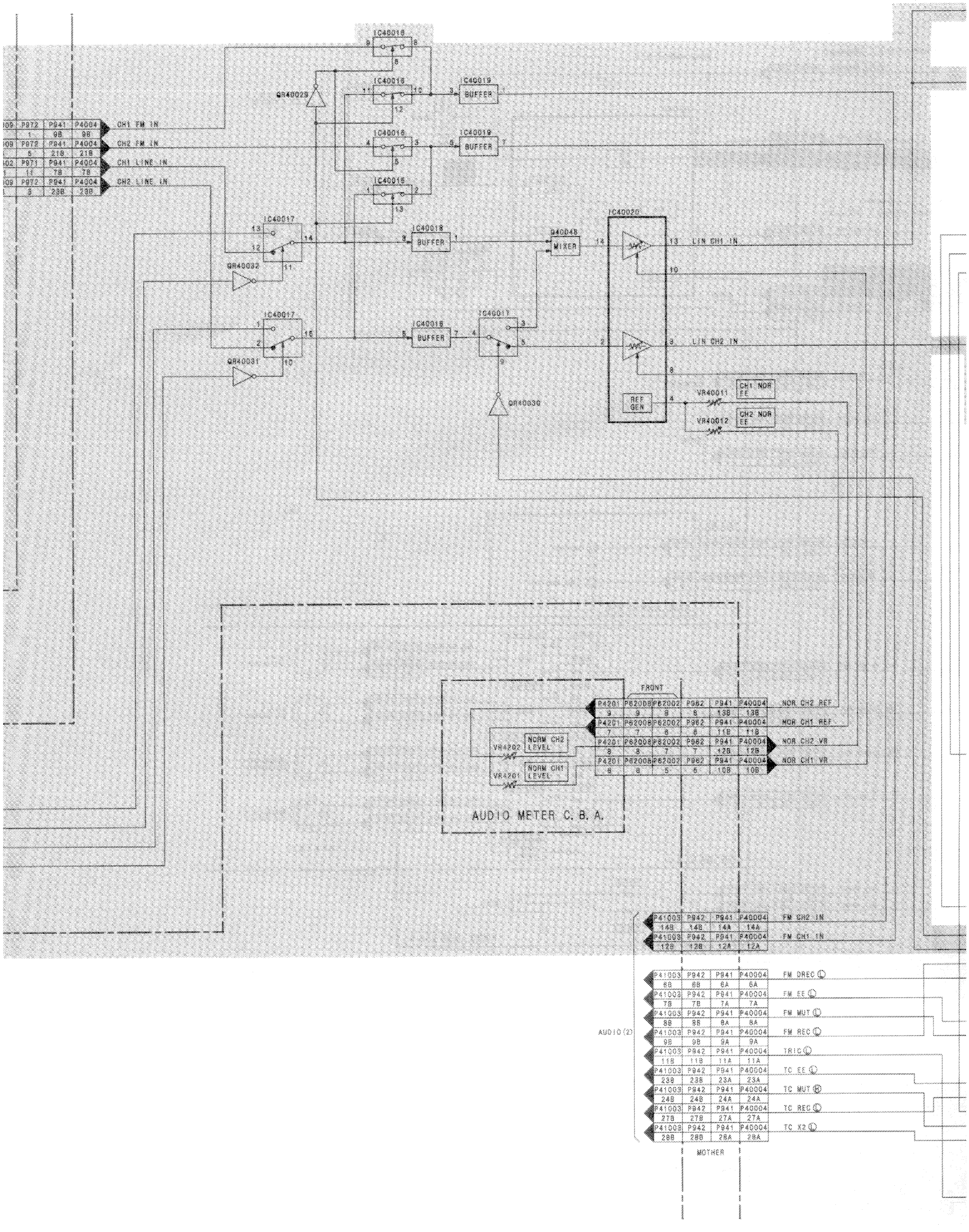
IC40016
QR40029
IC40019
BUFFER
CH1 FM IN
CH2 FM IN
CH1 LINE IN
CH2 LINE IN
IC40017
IC40018
IC40020
MIXER
LIN CH1 IN
LIN CH2 IN
QR40032
QR40031
QR40030
REF GEN
VR40011
VR40012
CH1 NOR EE
CH2 NOR EE
FRONT
NOR CH2 REF
NOR CH1 REF
NOR CH2 VR
NOR CH1 VR
VR4202
VR4201
NORM CH2 LEVEL
NORM CH1 LEVEL
AUDIO METER C. B. A.
FM CH2 IN
FM CH1 IN
FM DREC
FM EE
FM MUT
FM REC
TRIG
TC EE
TC MUT
TC REC
TC X2
AUDIO (2)
MOTHER

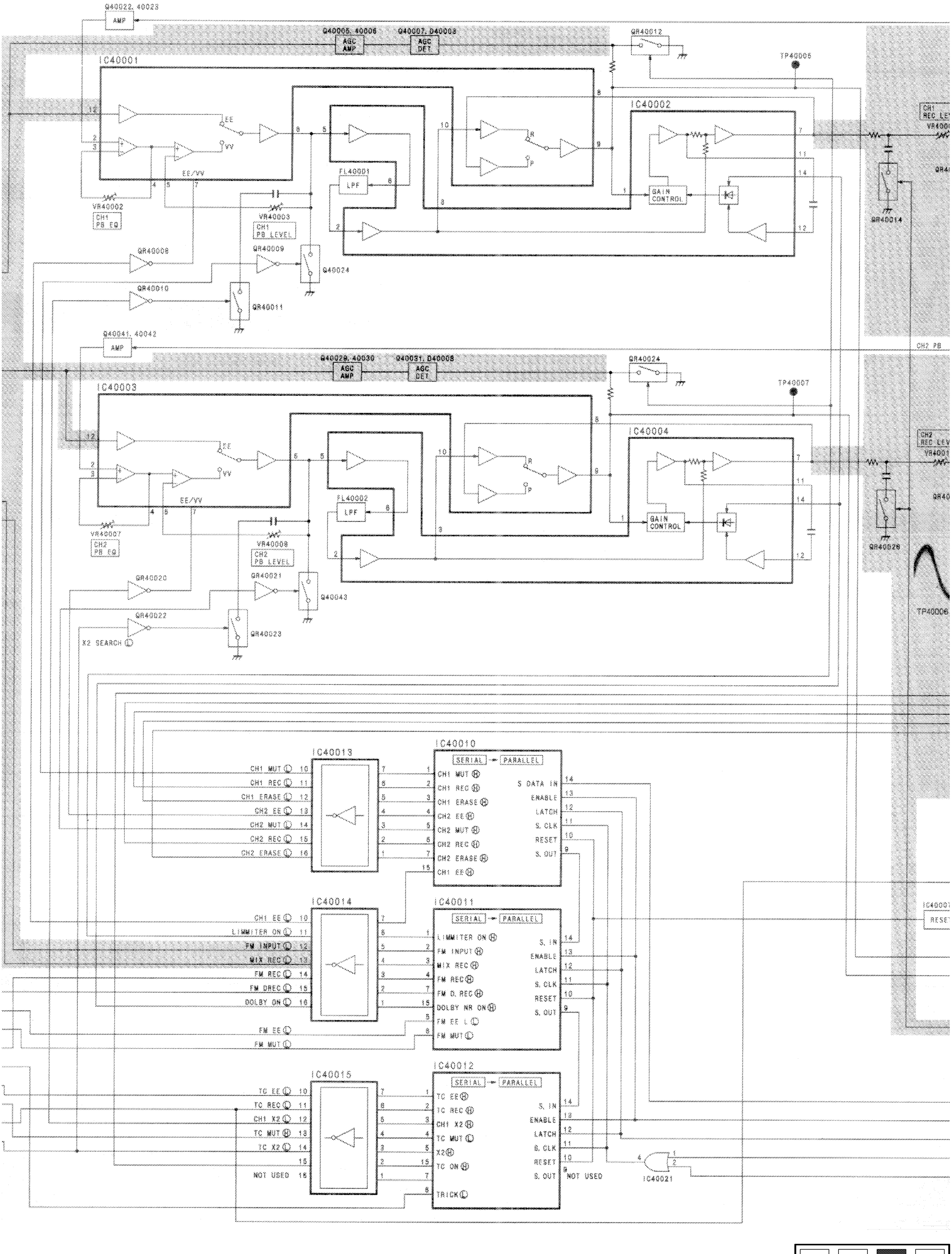

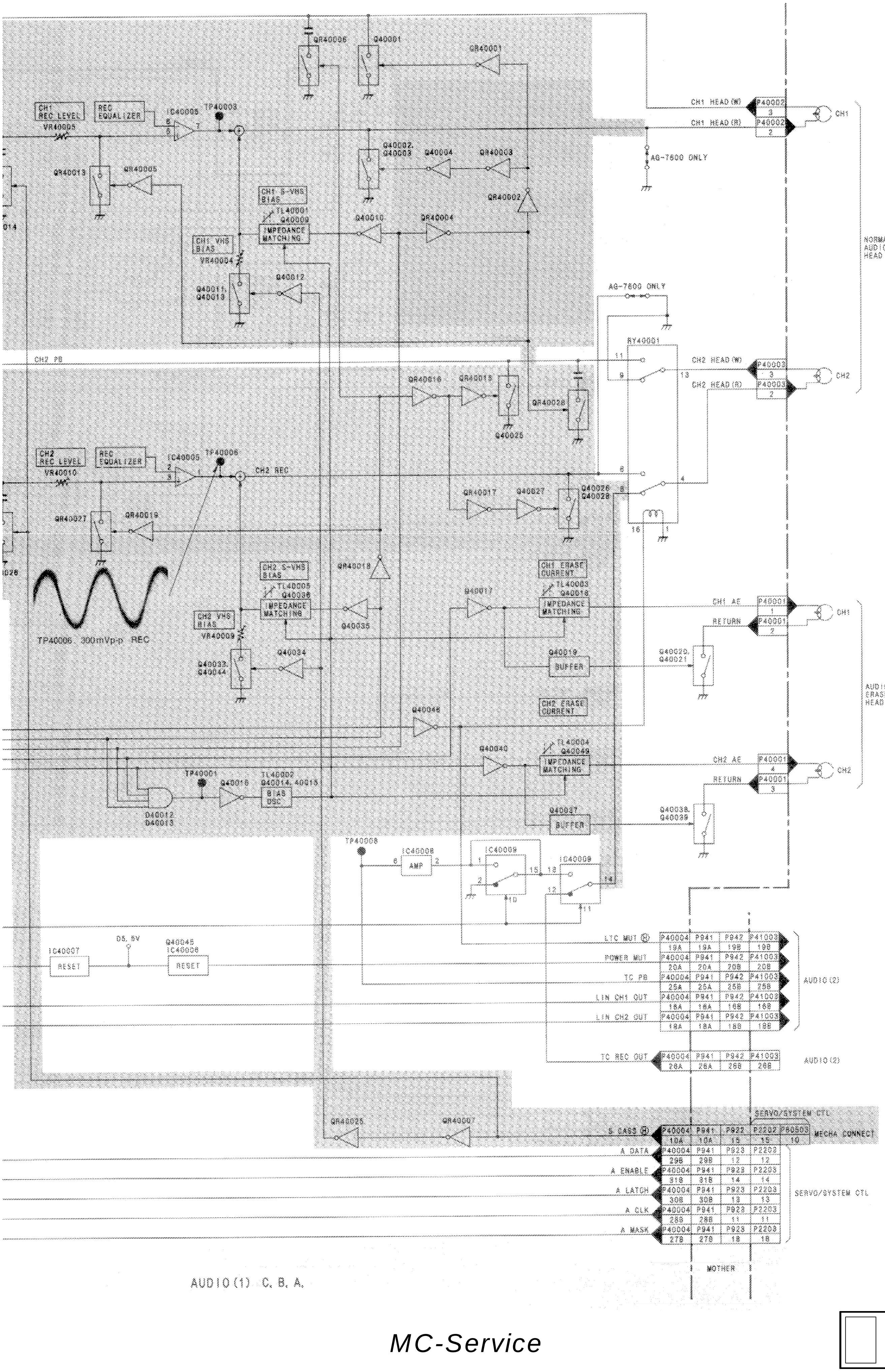

CH1 REC LEVEL
REC EQUALIZER
IC40005
TP40003
VR40005
QR40006
Q40001
QR40001
CH1 HEAD (W)
P40002
CH1 HEAD (R)
AG-7600 ONLY
CH1
Q40002, Q40003
Q40004
QR40003
QR40013
QR40005
CH1 S-VHS BIAS
QR40002
TL40001
Q40009
IMPEDANCE MATCHING
Q40010
QR40004
CH1 VHS BIAS
VR40004
NORMAL AUDIO HEAD
Q40011, Q40013
Q40012
AG-7600 ONLY
RY40001
CH2 PB
CH2 HEAD (W)
P40003
CH2 HEAD (R)
CH2
QR40016
QR40015
QR40028
Q40025
CH2 REC LEVEL
REC EQUALIZER
IC40005
TP40006
VR40010
CH2 REC
QR40017
Q40027
Q40026 Q40028
QR40027
QR40019
CH2 S-VHS BIAS
QR40018
CH1 ERASE CURRENT
TL40005
Q40036
Q40017
TL40003
Q40018
CH2 VHS BIAS
VR40009
Q40035
CH1 AC
P40001
RETURN
TP40006, 300mVp-p REC
Q40019
BUFFER
Q40020, Q40021
Q40032, Q40044
Q40034
AUDIO ERASE HEAD
CH2 ERASE CURRENT
Q40046
Q40040
TL40004
Q40049
CH2 AC
TP40001
Q40016
TL40002
Q40014, 40015
BIAS OSC
D40012
D40013
Q40037
Q40038, Q40039
TP40008
IC40008
AMP
IC40009
IC40007
RESET
D5, 5V
Q40045
IC40006
LTC MUT
POWER MUT
TC PB
LIN CH1 OUT
LIN CH2 OUT
TC REC OUT
P40004
P941
P942
P41003
AUDIO (2)
SERVO/SYSTEM CTL
QR40025
QR40007
S CASS
A DATA
A ENABLE
A LATCH
A CLK
A MASK
P922
P923
P2202
P2203
P60503
MECHA CONNECT
MOTHER
AUDIO (1) C. B. A.

Hi-Fi AUDIO BLOCK DIAGRAM

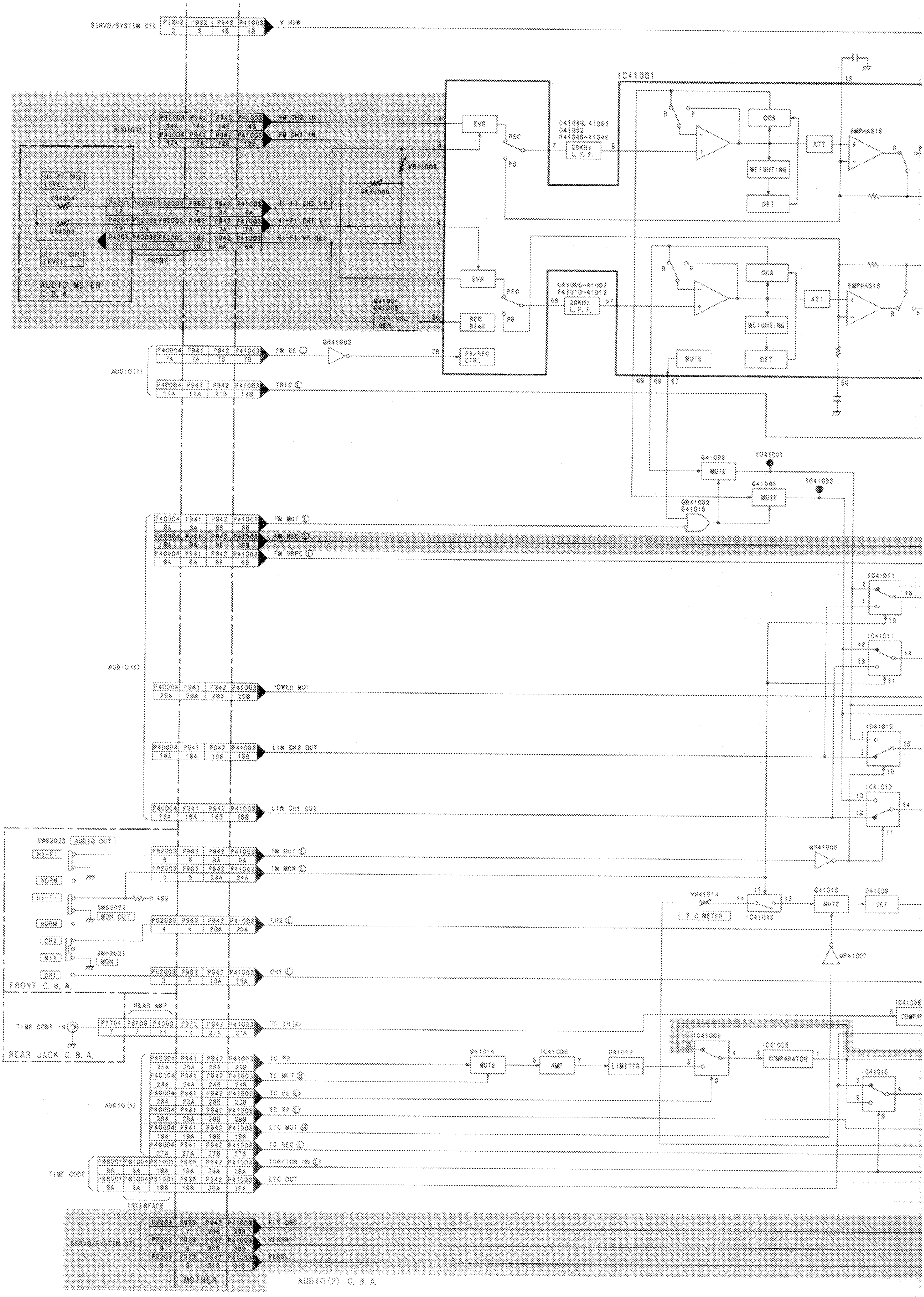

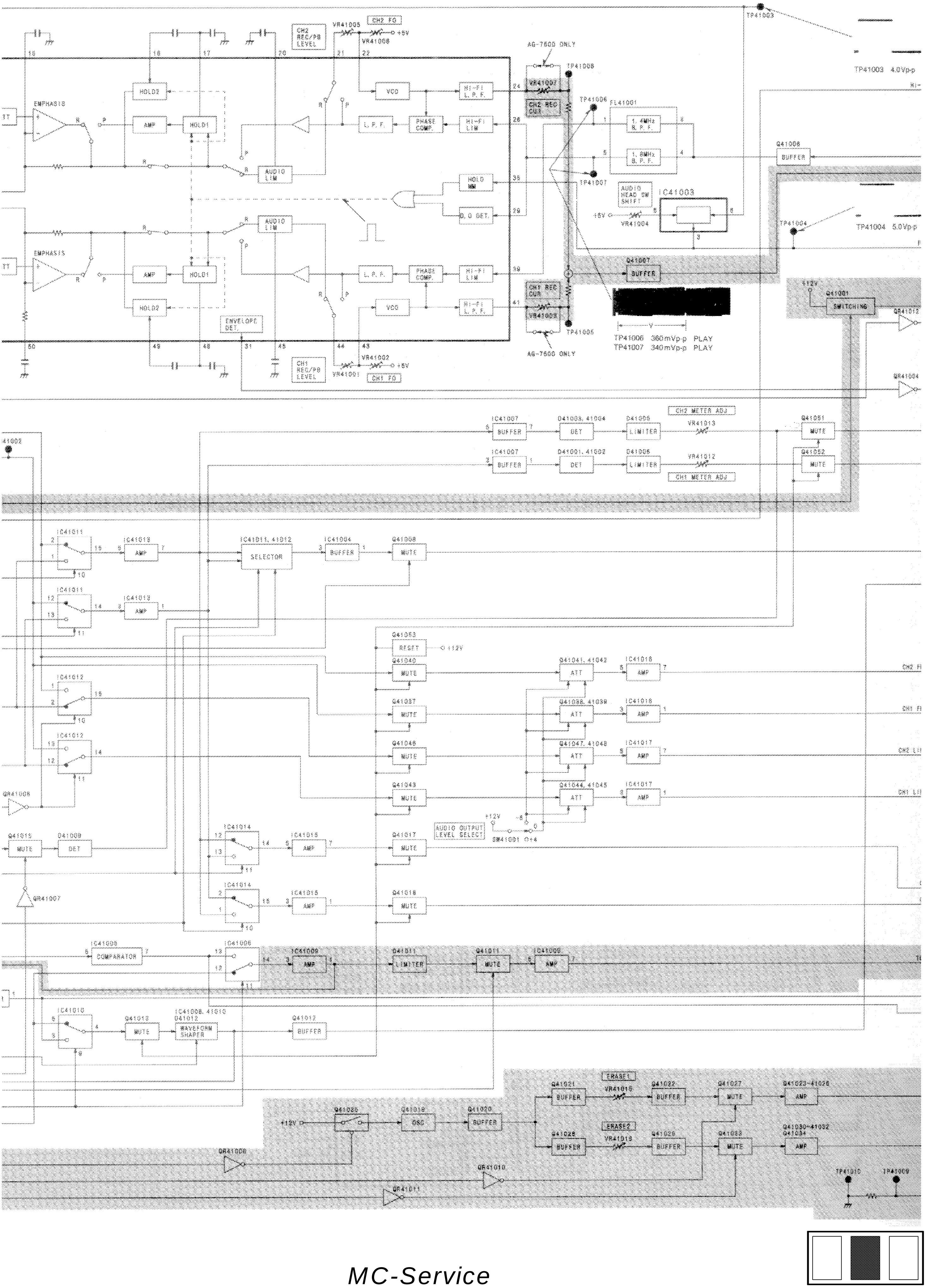
TP41003
TP41003 4.0Vp-p
VR41005
CH2 FG
VR41006
CH2 REC/PB LEVEL
AG-7600 ONLY
TP41008
HOLD2
HOLD1
AMP
EMPHASIS
VCO
Hi-Fi L.P.F.
VR41007
CH2 REC CUR
TP41006
FL41001
1.4MHz B.P.F.
1.8MHz B.P.F.
L.P.F.
PHASE COMP.
Hi-Fi LIM
AUDIO LIM
Q41008
BUFFER
HOLD MM
D.O DET.
TP41007
AUDIO HEAD SW SHIFT
IC41003
VR41004
TP41004
TP41004 5.0Vp-p
Q41007
BUFFER
CH1 REC CUR
VR41003
Q41001
SWITCHING
HOLD2
ENVELOPE DET.
TP41005
AG-7600 ONLY
TP41006 360mVp-p PLAY
TP41007 340mVp-p PLAY
CH1 REC/PB LEVEL
VR41002
VR41001
CH1 FG
IC41007
BUFFER
D41003, 41004
DET
Q41005
LIMITER
CH2 METER ADJ
VR41013
Q41051
MUTE
D41001, 41002
Q41006
VR41012
Q41052
CH1 METER ADJ
IC41011
IC41013
AMP
IC41011, 41012
SELECTOR
IC41004
BUFFER
Q41008
MUTE
IC41012
Q41053
RESET
Q41040
Q41041, 41042
ATT
IC41016
Q41037
Q41038, 41039
Q41046
Q41047, 41048
IC41017
Q41043
Q41044, 41045
CH2 FF
CH1 FF
CH2 LIN
CH1 LIN
QR41006
AUDIO OUTPUT LEVEL SELECT
SW41001
IC41014
IC41015
Q41017
Q41018
Q41015
MUTE
D41009
DET
QR41007
IC41005
COMPARATOR
IC41006
IC41009
AMP
Q41011
LIMITER
Q41011
MUTE
IC41010
Q41013
IC41008, 41010
Q41012
WAVEFORM SHAPER
Q41012
BUFFER
ERASE1
Q41021
BUFFER
VR41016
Q41022
Q41027
Q41023-41026
Q41025
Q41019
OSC
Q41020
ERASE2
Q41028
VR41015
Q41029
Q41033
Q41030-41032 Q41034
QR41008
QR41010
QR41011
TP41010
TP41009

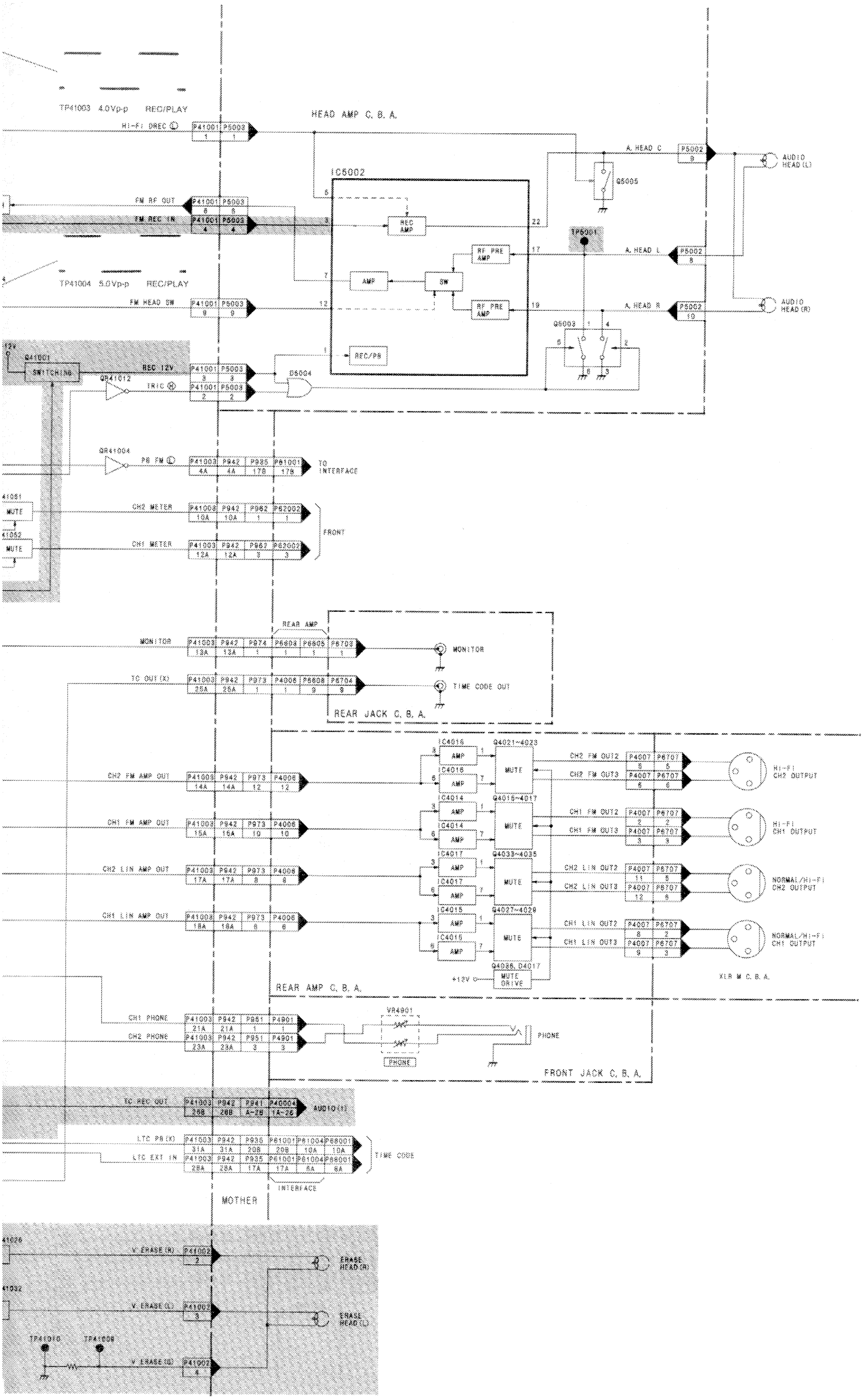
TP41003 4.0Vp-p REC/PLAY
HEAD AMP C. B. A.
IC5002
REC AMP
RF PRE AMP
AMP
SW
REC/PB
TP41004 5.0Vp-p REC/PLAY
FM RF OUT
FM REC IN
FM HEAD SW
REC 12V
SWITCHING
A. HEAD C
A. HEAD L
A. HEAD R
AUDIO HEAD (L)
AUDIO HEAD (R)
Q5005
Q5003
TP5001
D5004
PB FM
TO INTERFACE
CH2 METER
CH1 METER
MUTE
FRONT
REAR AMP
MONITOR
TC OUT (X)
TIME CODE OUT
REAR JACK C. B. A.
CH2 FM AMP OUT
CH1 FM AMP OUT
CH2 LIN AMP OUT
CH1 LIN AMP OUT
Hi-Fi CH2 OUTPUT
Hi-Fi CH1 OUTPUT
NORMAL/Hi-Fi CH2 OUTPUT
NORMAL/Hi-Fi CH1 OUTPUT
MUTE DRIVE
XLR M C. B. A.
REAR AMP C. B. A.
CH1 PHONE
CH2 PHONE
VR4901
PHONE
FRONT JACK C. B. A.
TC REC OUT
AUDIO (1)
LTC PB (X)
LTC EXT IN
TIME CODE
INTERFACE
MOTHER
V ERASE (R)
V ERASE (L)
V ERASE (G)
ERASE HEAD (R)
ERASE HEAD (L)
TP41010
TP41009

IMPORTANT SAFETY NOTICE

COMPONENTS IDENTIFIED WITH THE MARK ⚠ HAVE THE SPECIAL CHARACTERISTICS FOR SAFETY.
WHEN REPLACING ANY OF THESE COMPONENTS, USE ONLY THE SAME TYPE.

NOTE

DO NOT USE THE PART NUMBER SHOWN ON THIS DRAWING FOR ORDERING. THE CORRECT PART NUMBER IS SHOWN IN THE PARTS LIST. AND MAY BE SLIGHTLY DIFFERENT OR AMENDED SINCE THIS DRAWING WAS PREPARED.

GENERAL COMPARISON CHART

SCHEMATIC DIAGRAM	AG-7700 /7600	REMARK
POWER SCHEMATIC DIAGRAM 1/1 (E1)	SCM-5	CHANGED (See Page : SCM-7)
POWER CONNECT SCHEMATIC DIAGRAM 1/1 (E32)	SCM-5	COMMON (See AG-7700/ 7600 S/ M)
SYSTEM CONTROL SCHEMATIC DIAGRAM 1/11 (E3)	SCM-7	CHANGED (See Page : SCM-9)
SUB SYSTEM CONTROL SCHEMATIC DIAGRAM 2/11 (E3)	SCM-6	CHANGED (See Page : SCM-8)
REEL SERVO SCHEMATIC DIAGRAM 3/11 (E3)	SCM-9	CHANGED (See Page : SCM-11)
CYL SERVO SCHEMATIC DIAGRAM 4/11 (E3)	SCM-8	CHANGED (See Page : SCM-10)
CTL AMP SCHEMATIC DIAGRAM 5/11 (E3)	SCM-10	CHANGED (See Page : SCM-12)
WIDE SCHEMATIC DIAGRAM 6/11 (E3)	SCM-11	CHANGED (See Page : SCM-13)
CAPSTAN SERVO-1 SCHEMATIC DIAGRAM 7/11 (E3)	SCM-11	CHANGED (See Page : SCM-13)
CAPSTAN SERVO-2 SCHEMATIC DIAGRAM 8/11 (E3)	SCM-12	CHANGED (See Page : SCM-14)
MOTOR DRIVE-1 SCHEMATIC DIAGRAM 9/11 (E3)	SCM-12	CHANGED (See Page : SCM-14)
MOTOR DRIVE-2 SCHEMATIC DIAGRAM 10/11 (E3)	SCM-13	CHANGED (See Page : SCM-15)
SUB POWER SCHEMATIC DIAGRAM 11/11 (E3)	SCM-14	CHANGED (See Page : SCM-16)
VIDEO I/ O-1 SCHEMATIC DIAGRAM 1/7 (E5)	SCM-15	CHANGED (See Page : SCM-17)
VIDEO I/ O-2 SCHEMATIC DIAGRAM 2/7 (E5)	SCM-17	CHANGED (See Page : SCM-19)
VIDEO I/ O-3 SCHEMATIC DIAGRAM 3/7 (E5)	SCM-16	CHANGED (See Page : SCM-18)
VIDEO I/ O-4 SCHEMATIC DIAGRAM 4/7 (E5)	SCM-18	CHANGED (See Page : SCM-20)
VIDEO I/ O-5 SCHEMATIC DIAGRAM 5/7 (E5)	SCM-19	CHANGED (See Page : SCM-21)
VIDEO I/ O-6 SCHEMATIC DIAGRAM 6/7 (E5)	SCM-20	CHANGED (See Page : SCM-22)
VIDEO I/ O COMPARISON CHART 7/7 (E5)	SCM-20	CHANGED (See Page : SCM-22)
XLR M SCHEMATIC DIAGRAM 1/1 (E30)	SCM-20	COMMON (See AG-7700/ 7600 S/ M)
XLR F SCHEMATIC DIAGRAM 1/1 (E31:AG-8700 ONLY)	SCM-20	COMMON (See AG-7700/ 7600 S/ M)
VIDEO YC-1 SCHEMATIC DIAGRAM 1/6 (E6)	SCM-21	CHANGED (See Page : SCM-23)
VIDEO YC-2 SCHEMATIC DIAGRAM 2/6 (E6)	SCM-22	CHANGED (See Page : SCM-24)
VIDEO YC-3 SCHEMATIC DIAGRAM 3/6 (E6)	SCM-23	CHANGED (See Page : SCM-25)
VIDEO YC-4 SCHEMATIC DIAGRAM 4/6 (E6)	SCM-24	CHANGED (See Page : SCM-26)
VIDEO YC-5 SCHEMATIC DIAGRAM 5/6 (E6)	SCM-25	CHANGED (See Page : SCM-27)
VIDEO YC COMPARISON CHART 6/6 (E6)	SCM-24	CHANGED (See Page : SCM-26)
YC REC-1 SCHEMATIC DIAGRAM 1/6 (E13:AG-8700 ONLY)	SCM-26	CHANGED (See Page : SCM-28)
YC REC-2 SCHEMATIC DIAGRAM 2/6 (E13:AG-8700 ONLY)	SCM-25	CHANGED (See Page : SCM-27)
YC REC-3 SCHEMATIC DIAGRAM 3/6 (E13:AG-8700 ONLY)	SCM-26	CHANGED (See Page : SCM-28)
YC REC-4 SCHEMATIC DIAGRAM 4/6 (E13:AG-8700 ONLY)	SCM-27	CHANGED (See Page : SCM-29)
YC REC-5 SCHEMATIC DIAGRAM 5/6 (E13:AG-8700 ONLY)	SCM-28	CHANGED (See Page : SCM-30)
YC REC-6 SCHEMATIC DIAGRAM 6/6 (E13:AG-8700 ONLY)	SCM-29	CHANGED (See Page : SCM-31)

MC-Service

SCHEMATIC DIAGRAM	AG-7700 ∕7600	REMARK
AUDIO (1) LINER (AG-8700) SCHEMATIC DIAGRAM 1∕3 (E7)	SCM-29	COMMON (See AG-7700/ 7600 S/ M)
AUDIO (1) CONTROL (AG-8700) SCHEMATIC DIAGRAM 2∕3 (E7)	SCM-30	COMMON (See AG-7700/ 7600 S/ M)
AUDIO METER SCHEMATIC DIAGRAM 1∕1 (E21)	SCM-30	COMMON (See AG-7700/ 7600 S/ M)
AUDIO (1) INPUT (AG-8700) SCHEMATIC DIAGRAM 3∕3 (E7)	SCM-31	COMMON (See AG-7700/ 7600 S/ M)
AUDIO (1) LINER (AG-8600) SCHEMATIC DIAGRAM 1∕3 (E7)	SCM-32	COMMON (See AG-7700/ 7600 S/ M)
AUDIO (1) CONTROL (AG-8600) SCHEMATIC DIAGRAM 2∕3 (E7)	SCM-33	COMMON (See AG-7700/ 7600 S/ M)
AUDIO (1) INPUT (AG-8600) SCHEMATIC DIAGRAM 3∕3 (E7)	SCM-34	COMMON (See AG-7700/ 7600 S/ M)
AUDIO (2) PHONE OUT (AG-8700) SCHEMATIC DIAGRAM 3∕5 (E8)	SCM-34	COMMON (See AG-7700/ 7600 S/ M)
AUDIO (2) FM AUDIO (AG-8700) SCHEMATIC DIAGRAM 1∕5 (E8)	SCM-35	COMMON (See AG-7700/ 7600 S/ M)
AUDIO (2) TC (AG-8700) SCHEMATIC DIAGRAM 2∕5 (E8)	SCM-36	COMMON (See AG-7700/ 7600 S/ M)
AUDIO (2) FLYING ERACE (AG-8700) SCHEMATIC DIAGRAM 4∕5 (E8)	SCM-37	COMMON (See AG-7700/ 7600 S/ M)
AUDIO (2) OUTPUT (AG-8700) SCHEMATIC DIAGRAM 5∕5 (E8)	SCM-38	COMMON (See AG-7700/ 7600 S/ M)
AUDIO (2) FM AUDIO (AG-8600) SCHEMATIC DIAGRAM 1∕4 (E8)	SCM-39	COMMON (See AG-7700/ 7600 S/ M)
AUDIO (2) TC (AG-8600) SCHEMATIC DIAGRAM 2∕4 (E8)	SCM-40	COMMON (See AG-7700/ 7600 S/ M)
AUDIO (2) PHONE OUT (AG-8600) SCHEMATIC DIAGRAM 3∕4 (E8)	SCM-41	COMMON (See AG-7700/ 7600 S/ M)
AUDIO (2) OUTPUT (AG-8600) SCHEMATIC DIAGRAM 4∕4 (E8)	SCM-41	COMMON (See AG-7700/ 7600 S/ M)
INTERFACE-1 SCHEMATIC DIAGRAM 1∕6 (E9)	SCM-42	CHANGED (See Page : SCM-31)
INTERFACE-2 SCHEMATIC DIAGRAM 2∕6 (E9)	SCM-42	CHANGED (See Page : SCM-32)
INTERFACE-3 SCHEMATIC DIAGRAM 3∕6 (E9)	SCM-43	CHANGED (See Page : SCM-32)
INTERFACE-4 SCHEMATIC DIAGRAM 4∕6 (E9)	SCM-43	CHANGED (See Page : SCM-33)
INTERFACE-5 SCHEMATIC DIAGRAM 5∕6 (E9)	SCM-43	CHANGED (See Page : SCM-33)
INTERFACE COMPARISON CHART 6∕6 (E9)	SCM-43	CHANGED (See Page : SCM-33)
TIME CODE-1 SCHEMATIC DIAGRAM 1∕3 (E10)	SCM-44	COMMON (See AG-7700/ 7600 S/ M)
TIME CODE COMPARISON CHART 3∕3 (E10)	SCM-44	COMMON (See AG-7700/ 7600 S/ M)
TIME CODE-2 SCHEMATIC DIAGRAM 2∕3 (E10)	SCM-44	COMMON (See AG-7700/ 7600 S/ M)
REEL DRIVE SCHEMATIC DIAGRAM 1∕1 (E14)	SCM-45	COMMON (See AG-7700/ 7600 S/ M)
HEAD AMP SCHEMATIC DIAGRAM 1∕1 (E15)	SCM-46	CHANGED (See Page : SCM-34)
FRONT-1 SCHEMATIC DIAGRAM 1∕4 (E16)	SCM-47	CHANGED (See Page : SCM-35)
FRONT-2 SCHEMATIC DIAGRAM 2∕4 (E16)	SCM-47	CHANGED (See Page : SCM-34)
FRONT-3 SCHEMATIC DIAGRAM 3∕4 (E16)	SCM-48	CHANGED (See Page : SCM-35)
FRONT COMPARISON CHART 4∕4 (E16)	SCM-48	CHANGED (See Page : SCM-35)
FRONT LED SCHEMATIC DIAGRAM 1∕2 (E17:AG-8700 ONLY)	SCM-48	COMMON (See AG-7700/ 7600 S/ M)
FRONT LED COMPARISON CHART 2∕2 (E17:AG8700 ONLY)	SCM-48	COMMON (See AG-7700/ 7600 S/ M)
KEYBOARD SCHEMATIC DIAGRAM 1∕2 (E18)	SCM-48	COMMON (See AG-7700/ 7600 S/ M)
KEYBOARD COMPARISON CHART 2∕2 (E18)	SCM-48	COMMON (See AG-7700/ 7600 S/ M)
REAR AMP VIDEO SCHEMATIC DIAGRAM 1∕4 (E28)	SCM-49	CHANGED (See Page : SCM-48)
REAR AMP AUDIO IN SCHEMATIC DIAGRAM 2∕4 (E28)	SCM-49	CHANGED (See Page : SCM-49)
REAR AMP AUDIO OUT SCHEMATIC DIAGRAM 3∕4 (E28)	SCM-50	CHANGED (See Page : SCM-50)
REAR AMP COMPARISON CHART 4∕4 (E28)	SCM-50	CHANGED (See Page : SCM-51)
REAR JACK SCHEMATIC DIAGRAM 1∕2 (E29)	SCM-51	CHANGED (See Page : SCM-52)
REAR JACK COMPARISON CHART 2∕2 (E29)	SCM-51	CHANGED (See Page : SCM-52)
9PIN CONNECT SCHEMATIC DIAGRAM 1∕1 (E33)	SCM-51	COMMON (See AG-7700/ 7600 S/ M)
MIC JACK SCHEMATIC DIAGRAM 1∕1 (E20:AG-8700 ONLY)	SCM-52	COMMON (See AG-7700/ 7600 S/ M)
FRONT JACK SCHEMATIC DIAGRAM 1∕2 (E19)	SCM-52	COMMON (See AG-7700/ 7600 S/ M)
FRONT JACK COMPARISON CHART 2∕2 (E19)	SCM-52	COMMON (See AG-7700/ 7600 S/ M)
MOTHER SCHEMATIC DIAGRAM 1∕1 (E4)	SCM-53	CHANGED (See Page : SCM-53)
INTERCONNECTION SCHEMATIC DIAGRAM	SCM-54	CHANGED (See Page : SCM-54)

SCHEMATIC DIAGRAM	AG-7700 ∕7600	REMARK
Y MEMORY SCHEMATIC DIAGRAM 1∕9 (E11)	–	ADDED (See Page : SCM-36)
PB SYNC. SEP. SCHEMATIC DIAGRAM 2∕9 (E11)	–	ADDED (See Page : SCM-37)
WRITE PLL SCHEMATIC DIAGRAM 3∕9 (E11)	–	ADDED (See Page : SCM-38)
CLAMP & AMP SCHEMATIC DIAGRAM 4∕9 (E11)	–	ADDED (See Page : SCM-39)
C MEMORY SCHEMATIC DIAGRAM 5∕9 (E11)	–	ADDED (See Page : SCM-40)
G.A. BLOCK SCHEMATIC DIAGRAM 6∕9 (E11)	–	ADDED (See Page : SCM-41)
READ CLK GEN. SCHEMATIC DIAGRAM 7∕9 (E11)	–	ADDED (See Page : SCM-42)
TBC (1) CONNECTION SCHEMATIC DIAGRAM 8∕9 (E11)	–	ADDED (See Page : SCM-43)
TBC (1) COMPARISON CHART 9∕9 (E11)	–	ADDED (See Page : SCM-43)
SYSNC GEN-1 SCHEMATIC DIAGRAM 1∕6 (E12)	–	ADDED (See Page : SCM-44)
SYSNC GEN-2 SCHEMATIC DIAGRAM 2∕6 (E12)	–	ADDED (See Page : SCM-45)
SYSNC GEN-3 SCHEMATIC DIAGRAM 3∕6 (E12)	–	ADDED (See Page : SCM-46)
ENCODER SCHEMATIC DIAGRAM 4∕6 (E12)	–	ADDED (See Page : SCM-47)
TBC (2) CONNECTION SCHEMATIC DIAGRAM 5∕6 (E12)	–	ADDED (See Page : SCM-47)
TBC (2) COMPARISON CHART 6∕6 (E12)	–	ADDED (See Page : SCM-48)

MC-Service

POWER SCHEMATIC DIAGRAM (E1: Page CBA-3)

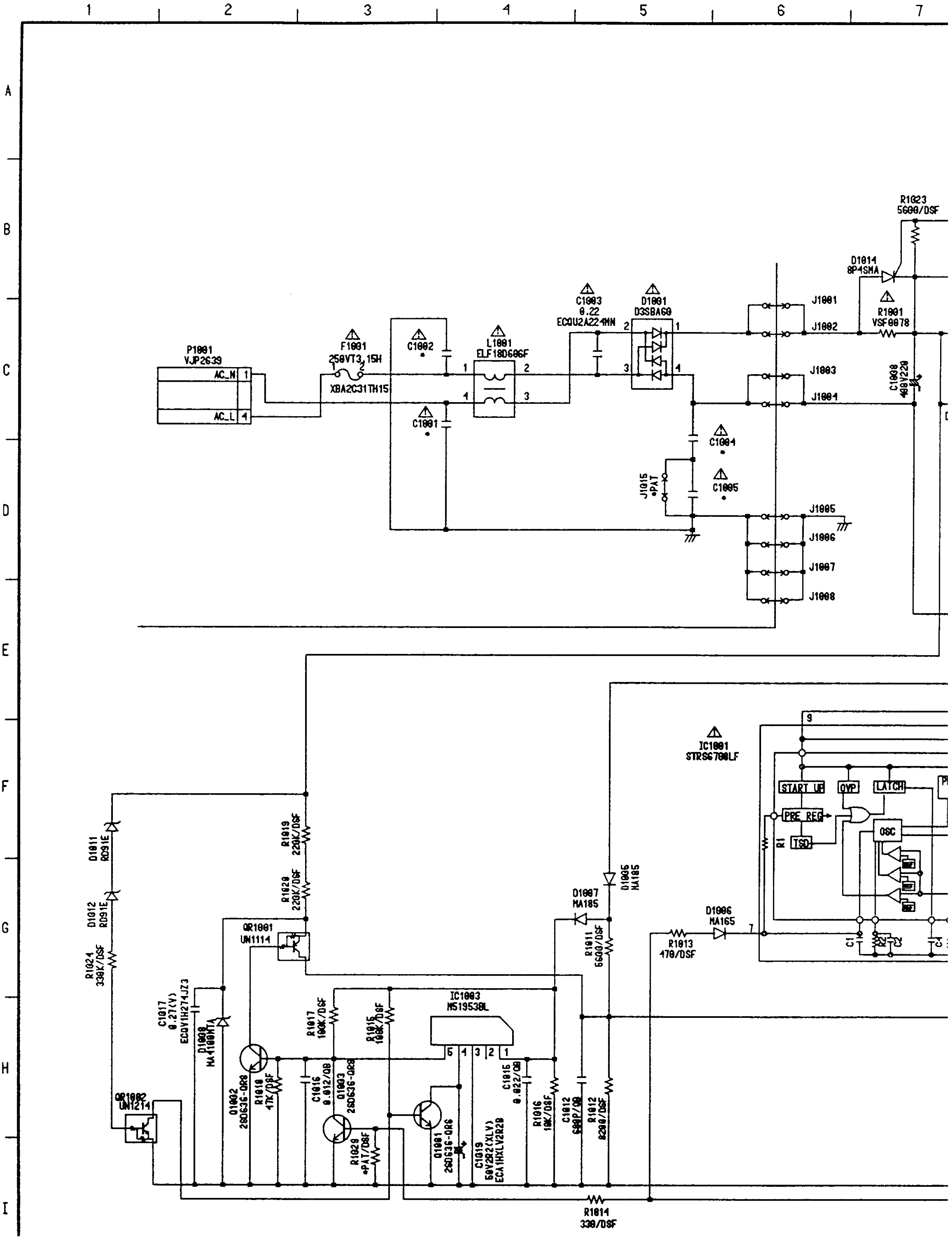

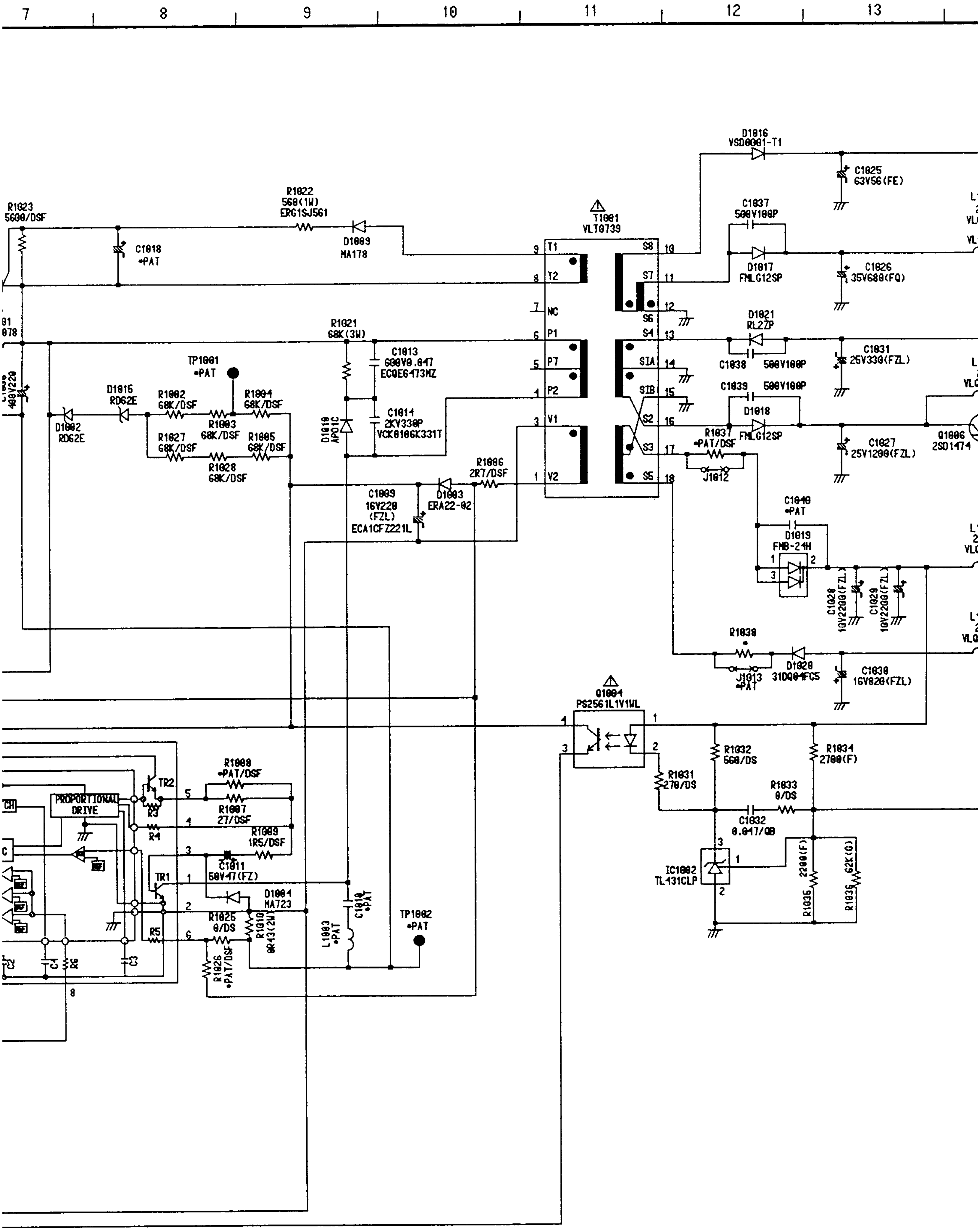
7
8
9
10
11
12
13
R1023
5600/DSF
R1022
560(1W)
ERG1SJ561
D1009
MA178
C1018
*PAT
T1001
VLT0739
D1016
VSD0001-T1
C1025
63V56(FE)
C1037
500V100P
D1017
FMLG12SP
C1026
35V680(FQ)
D1021
RL2ZP
C1038
500V100P
C1031
25V330(FZL)
C1039
500V100P
D1018
FMLG12SP
C1027
25V1200(FZL)
Q1006
2SD1474
R1037
*PAT/DSF
J1012
C1040
*PAT
D1019
FMB-24H
C1028
16V2200(FZL)
C1029
16V2200(FZL)
R1038
J1013
*PAT
D1020
31DQ04FC5
C1030
16V820(FZL)
R1021
68K(3W)
C1013
600V0.047
ECQE6473MZ
C1014
2KV330P
VCK0106K331T
D1010
AP01C
TP1001
*PAT
D1015
RD62E
D1002
RD62E
R1002
68K/DSF
R1003
68K/DSF
R1004
68K/DSF
R1027
68K/DSF
R1005
68K/DSF
R1028
68K/DSF
R1006
2R7/DSF
D1003
ERA22-02
C1009
16V220
(FZL)
ECA1CFZ221L
Q1004
PS2561L1V1WL
R1032
560/DS
R1034
2700(F)
R1031
270/DS
R1033
0/DS
C1032
0.047/QB
IC1002
TL431CLP
R1035
2200(F)
R1036
62K(G)
TR2
PROPORTIONAL
DRIVE
R3
R4
R5
TR1
R1008
*PAT/DSF
R1007
27/DSF
R1009
1R5/DSF
C1011
50V47(FZ)
D1004
MA723
R1025
0/DS
R1010
0R43(2W)
R1026
*PAT/DSF
L1003
*PAT
C1010
*PAT
TP1002
*PAT
T1
T2
NC
P1
P7
P2
V1
V2
S8
S7
S6
S4
SIA
SIB
S2
S3
S5

MC-Service

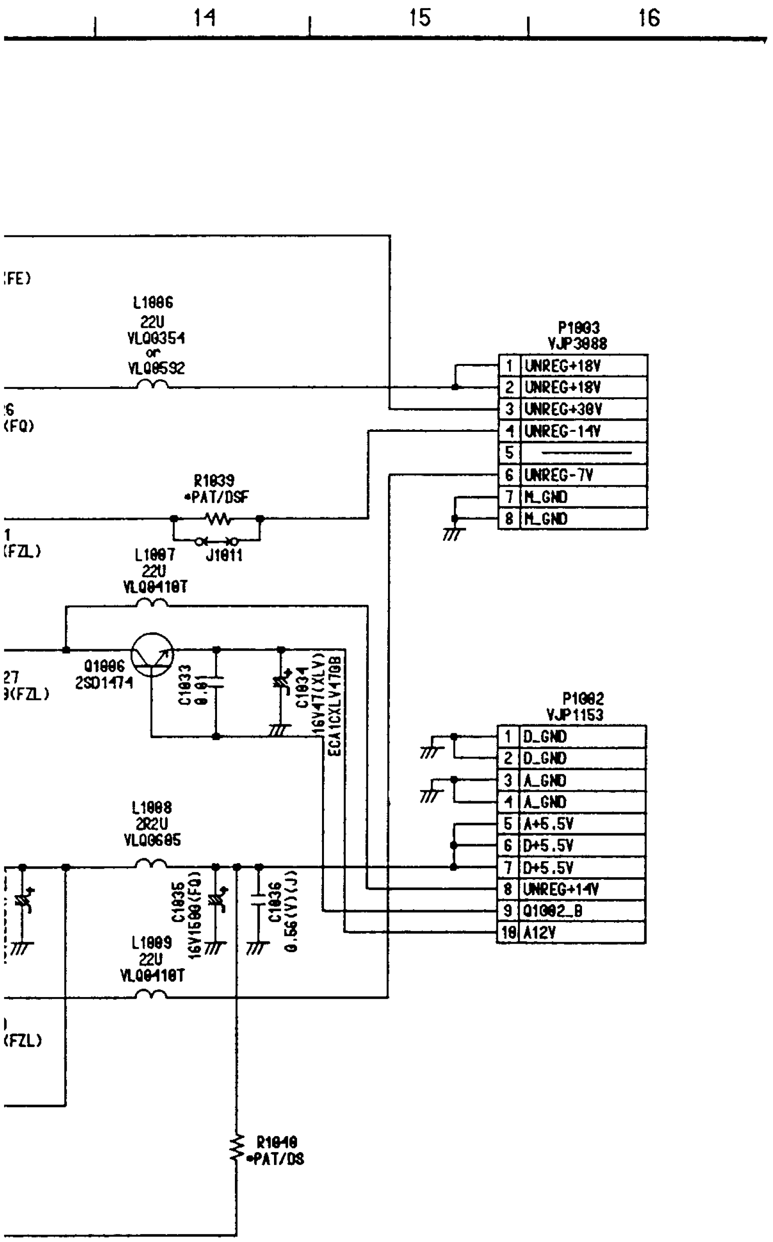

*REFER TO THE COMPARISON CHART

Ref No.1000 Series

REF	AG-8700	AG-8600
C1001	VCK0260M332	VCK0260M332
C1002	VCK0260M332	VCK0260M332
C1004	VCK0260M102	VCK0260M102
C1005	VCK0260M102	VCK0260M102
C1010	*PAT	*PAT
C1018	*PAT	*PAT
C1040	*PAT	*PAT
J1013	*PAT	*PAT
J1015	*PAT	*PAT
L1003	*PAT	*PAT
R1008	*PAT/DSF	*PAT/DSF
R1026	*PAT/DSF	*PAT/DSF
R1029	*PAT/DSF	*PAT/DSF
R1037	*PAT/DSF	*PAT/DSF
R1038	ERX3SJR82P	ERX3SJR82P
R1039	*PAT/DSF	*PAT/DSF
R1040	*PAT/DS	*PAT/DS
TP1001	*PAT	*PAT
TP1002	*PAT	*PAT

POWER DC VOLTAGE CHART

REF. NO.	IC1001									
MODE	1	2	3	4	5	6	7	8	9	
STOP	–	0	0	0.3	0.9	−0.1	0.2	1.3	7.5	
REC	–	0	0	0.3	0.9	−0.1	0.2	1.3	7.5	
REF. NO.	IC1002					IC1003				
MODE	K	A	G			1	2	3	4	5
STOP	4.1	0	2.5			8.0	0	0	1.2	0
REC	4.1	0	2.5			8.2	0	0	1.2	0
REF. NO.	Q1001			Q1002			Q1003			
MODE	E	C	B	E	C	B	E	C	B	
STOP	0	1.2	0	0	–	0	0	0	0.7	
REC	0	1.2	0	0	–	0	0	0	0.7	
REF. NO.	Q1004						Q1006			
MODE	1	2	3	4			E	C	B	
STOP	5.7	4.6	1.2	7.5			11.9	13.5	12.5	
REC	5.7	4.6	1.2	7.5			11.9	13.4	12.5	
REF. NO.	QR1001			QR1002						
MODE	E	C	B	E	C	B				
STOP	10.1	1.3	–	0	0	5.1				
REC	10.1	1.3	–	0	0	5.1				

SUB SYSTEM CONTROL SCHEMATIC DIAGRAM 2/11 (E3: Page CBA-5)

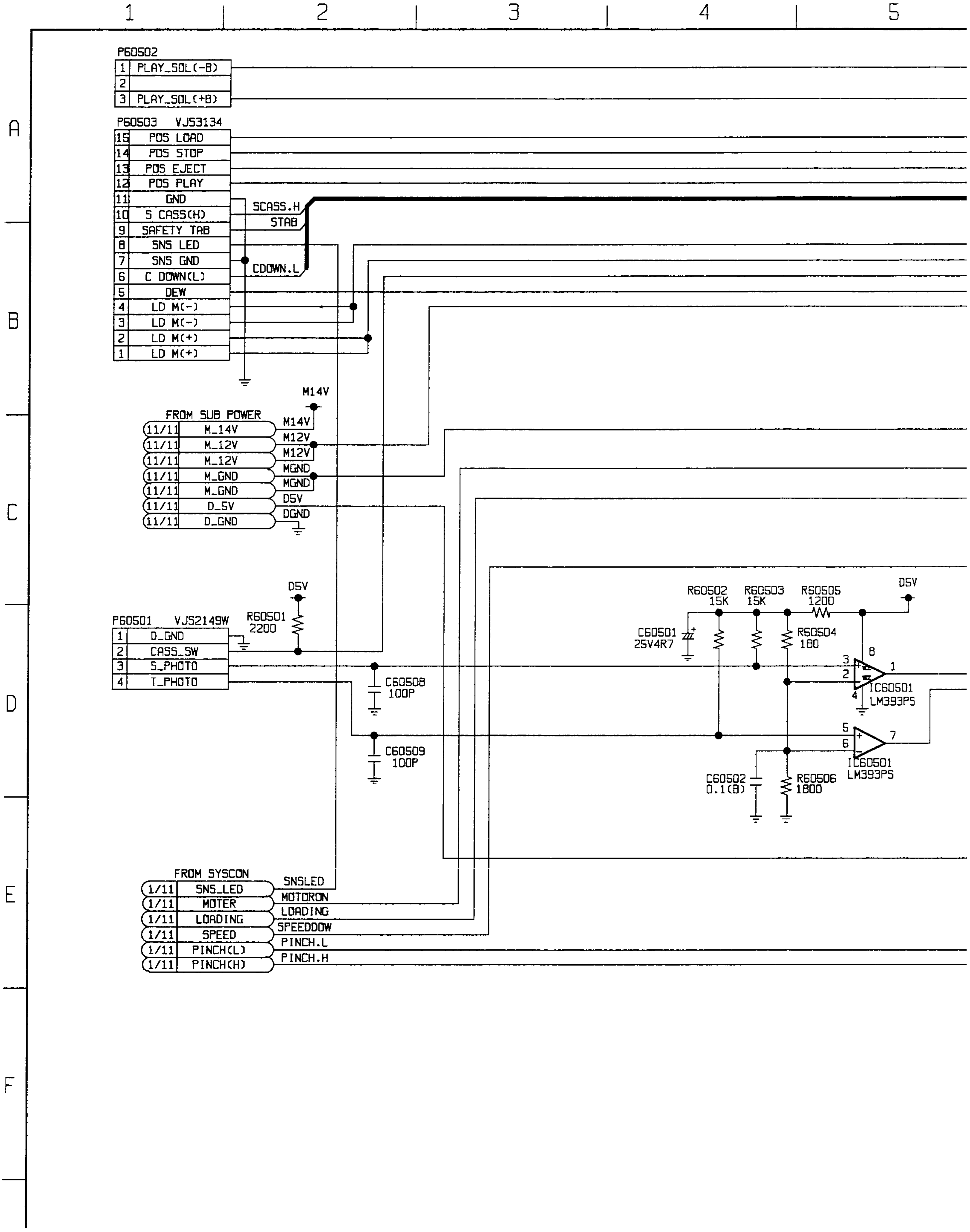

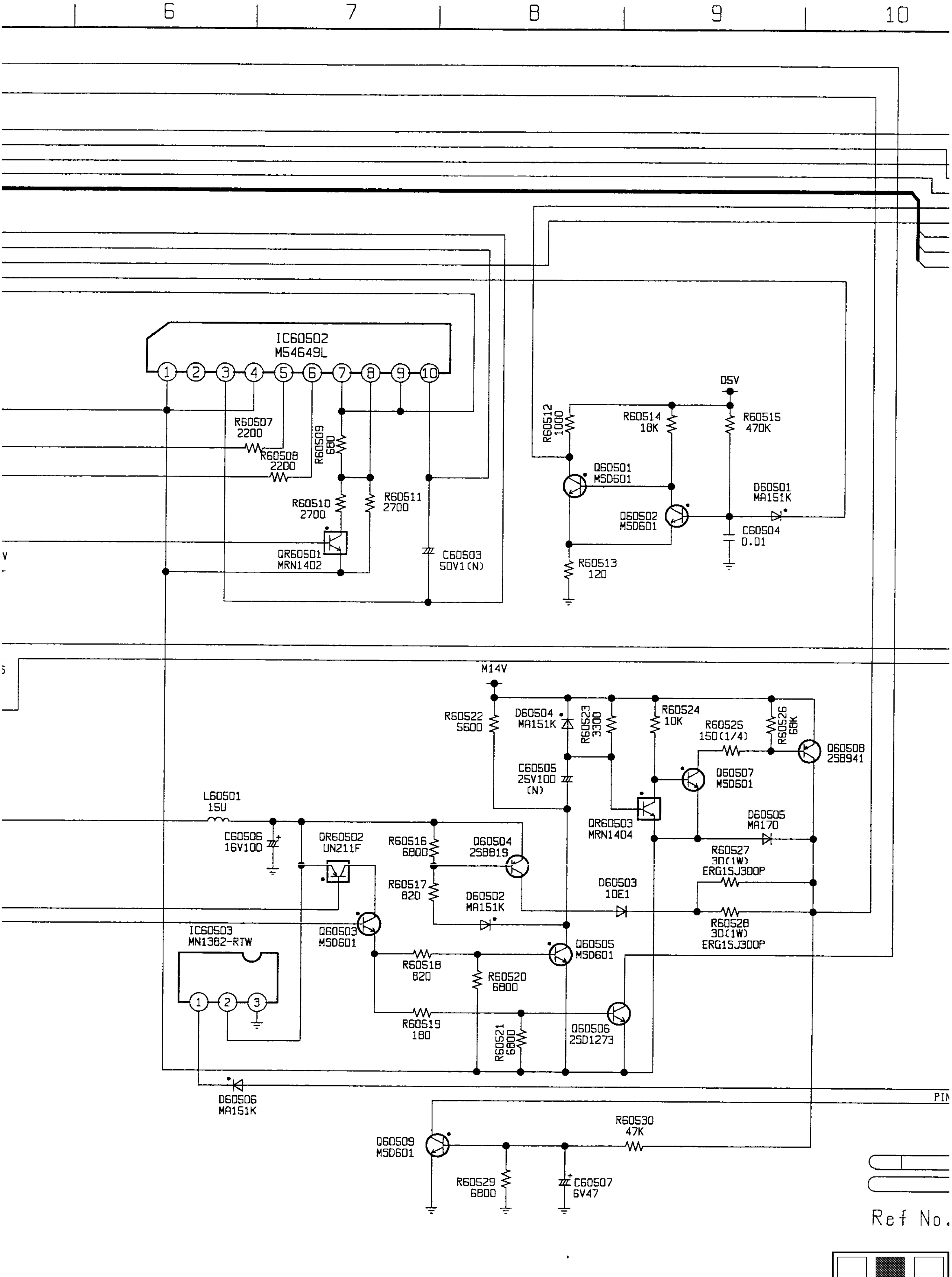
6
7
8
9
10
IC60502
M54649L
R60507
2200
R60508
2200
R60509
680
R60510
2700
R60511
2700
QR60501
MRN1402
C60503
50V1(N)
D5V
R60512
1000
R60514
18K
R60515
470K
Q60501
MSD601
Q60502
MSD601
D60501
MA151K
C60504
0.01
R60513
120
M14V
R60522
5600
D60504
MA151K
R60523
3300
R60524
10K
R60525
150(1/4)
R60526
68K
Q60508
2SB941
C60505
25V100
(N)
Q60507
MSD601
QR60503
MRN1404
D60505
MA170
L60501
15U
C60506
16V100
QR60502
UN211F
R60516
6800
Q60504
2SB819
R60527
30(1W)
ERG1SJ300P
R60517
820
D60502
MA151K
D60503
10E1
R60528
30(1W)
ERG1SJ300P
IC60503
MN1382-RTW
Q60503
MSD601
Q60505
MSD601
R60518
820
R60520
6800
R60519
180
R60521
6800
Q60506
2SD1273
D60506
MA151K
PIN
R60530
47K
Q60509
MSD601
R60529
6800
C60507
6V47
Ref No.

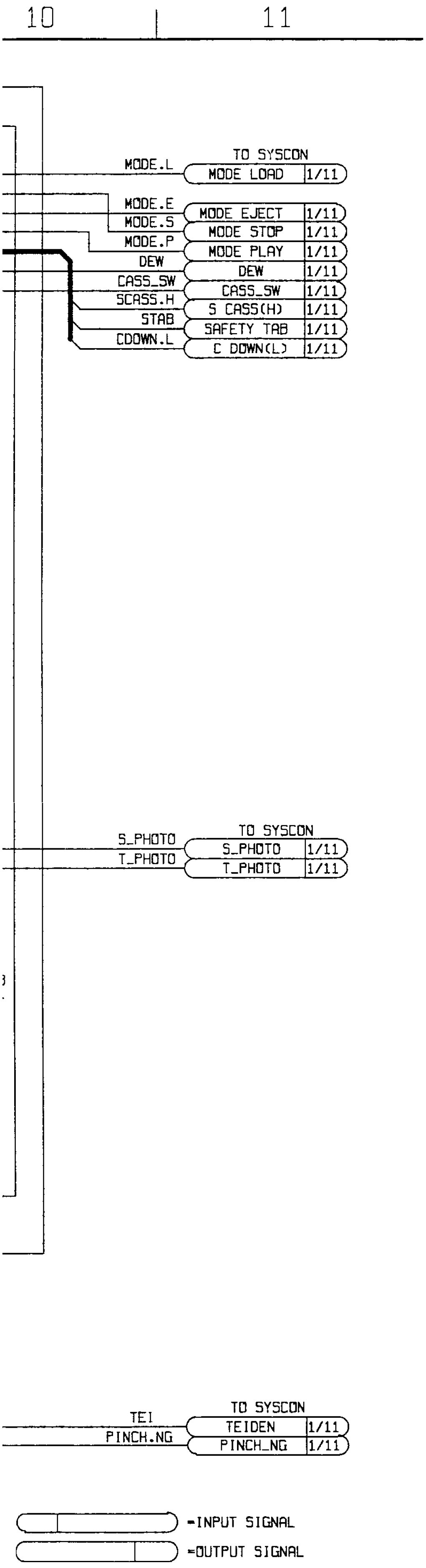

Ref No.60500 Series.

SUB SYSTEM CONTROL DC VOLTAGE CHART

REF. NO.	IC60501									
MODE	1	2	3	4	5	6	7	8		
STOP	4.9	2.9	3.2	0	3.2	2.9	4.9	5.1		
REC	4.8	2.9	3.2	0	3.2	2.9	4.8	5.1		
F.F	4.9	2.9	3.2	0	3.2	2.9	4.9	5.2		
REF. NO.	IC60502									
MODE	1	2	3	4	5	6	7	8	9	10
STOP	0	0.2	0.2	0	0	0	12.9	8.4	12.9	0.2
REC	0	0.2	0.2	0	0	0	12.9	8.4	12.9	0.2
F.F.	0	0.2	0.2	0	0	0	12.9	10.3	12.9	0.2
REF. NO.	IC60503									
MODE	V	G	O							
STOP	5.0	0	5.0							
REC	5.0	0	5.0							
F.F.	5.0	0	5.2							
REF. NO.	Q60501			Q60502			Q60503			
MODE	E	C	B	E	C	B	E	C	B	
STOP	0.6	0.6	1.2	0.6	1.2	0.4	4.2	4.8	4.8	
REC	0.6	0.6	1.2	0.6	1.2	0.4	4.2	4.8	4.8	
F.F.	0.6	0.6	1.2	0.6	1.2	0.4	0	0.1	0	
REF. NO.	Q60504			Q60505			Q60506			
MODE	E	C	B	E	C	B	E	C	B	
STOP	5.0	4.8	4.2	0	0	0.8	0	0	0.7	
REC	5.0	4.8	4.2	0	0	0.8	0	0	0.7	
F.F.	5.2	−0.1	4.2	0	14.9	0	0	0	0	
REF. NO.	Q60507			Q60508			Q60509			
MODE	E	C	B	E	C	B	E	C	B	
STOP	0	14.8	0	14.9	1.4	14.8	0	4.9	0.2	
REC	0	14.8	0	14.9	1.4	14.8	0	4.8	0.2	
F.F.	0	14.8	0	14.9	0	14.8	0	4.9	0	
REF. NO.	QR60501			QR60502			QR60503			
MODE	E	C	B	E	C	B	E	C	B	
STOP	0	10.3	0	4.9	4.8	0	0	0	13.9	
REC	0	10.2	0	4.9	4.8	0	0	0	13.9	
F.F.	0	10.2	0	5.2	0	4.9	0	0	13.9	

IC60503
MN1382-RTW

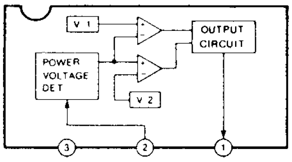

IC60502
M54649L

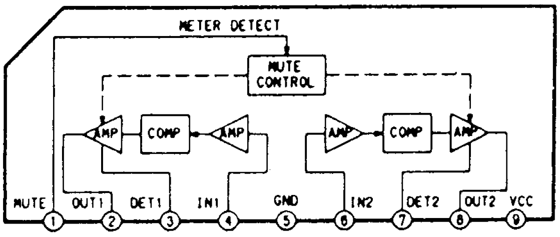

SYSTEM CONTROL SCHEMATIC DIAGRAM 1/11 (E3: Page CBA-5)

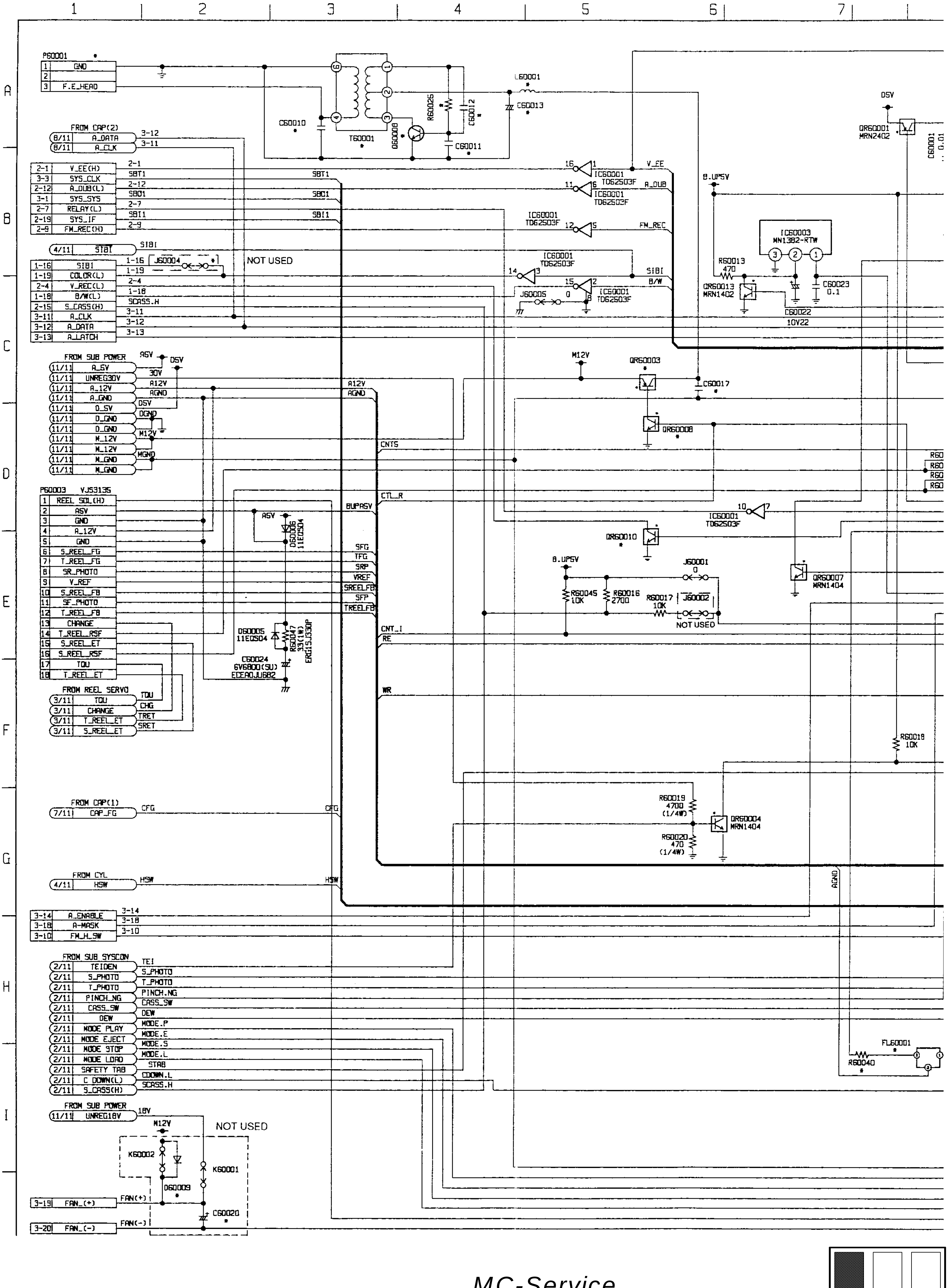

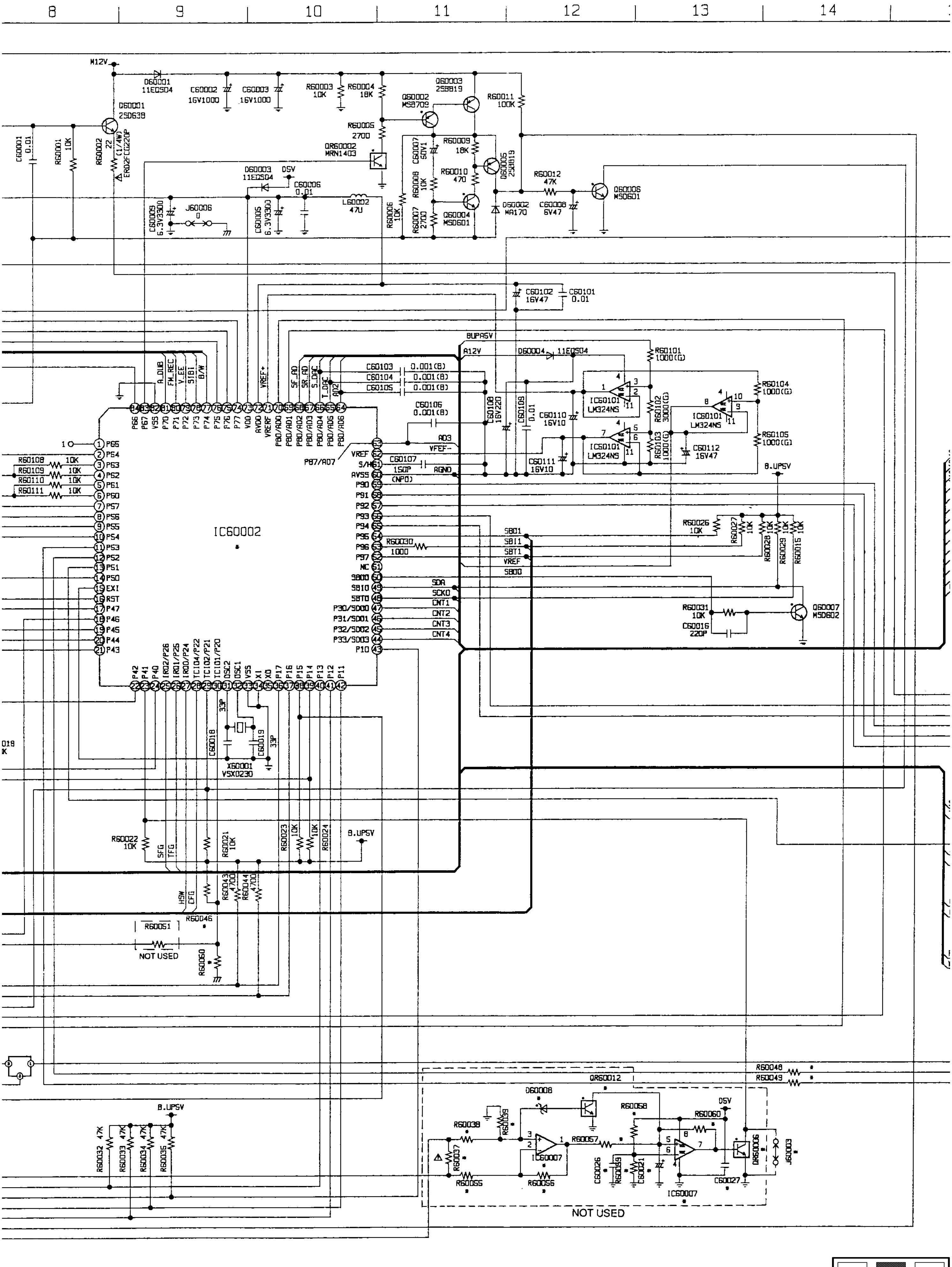

8
9
10
11
12
13
14
M12V
D60001 11EQS04
C60002 16V1000
C60003 16V1000
R60003 10K
R60004 18K
Q60003 2SB819
Q60002 MSB709
R60011 100K
Q60001 2SD638
C60001 0.01
R60001 10K
R60002 22 (1/4W) ERD2FCG220P
R60005 2700
QR60002 MRN1403
C60007 50V1
R60009 18K
R60010 470
Q60005 2SB819
D60003 11EQS04
D5V
C60006 0.01
L60002 47U
R60008 10K
R60012 47K
Q60006 MSD601
C60009 6.3V3300
J60006 0
C60005 6.3V3300
R60006 10K
R60007 2700
Q60004 MSD601
D60002 MA170
C60008 6V47
C60102 16V47
C60101 0.01
BUPASV
A12V
D60004 11EQS04
R60101 1000(G)
C60103 0.001(B)
C60104 0.001(B)
C60105 0.001(B)
C60106 0.001(B)
C60108 16V220
C60109 0.01
C60110 16V10
C60111 16V10
IC60101 LM324NS
R60102 3000(G)
R60103 1000(G)
R60104 1000(G)
R60105 1000(G)
C60112 16V47
C60107 150P
A.DUB
FM_REC
V_EE
SIBI
B/W
VREF+
SF_AD
SR_AD
S_DAC
T_DAC
AD2
AD3
VFEF-
AGND
(NPO)
P87/AD7
IC60002
R60108 10K
R60109 10K
R60110 10K
R60111 10K
B.UPSV
R60026 10K
R60027 10K
R60028 10K
R60029 10K
R60015 10K
R60030 1000
SBO1
SBI1
SBT1
VREF
SBO0
SDA
SCKO
CNT1
CNT2
CNT3
CNT4
R60031 10K
C60016 220P
Q60007 MSD602
C60018 33P
C60019 33P
X60001 VSX0230
R60022 10K
SFG
TFG
R60021 10K
R60023 10K
R60024 10K
HSW
CFG
R60043 4700
R60044 4700
R60046
R60051
NOT USED
R60050
R60032 47K
R60033 47K
R60034 47K
R60035 47K
R60048
R60049
QR60012
D60008
R60058
D5V
R60060
R60038
R60039
R60057
IC60007
R60037
R60055
R60056
C60026
R60059
C60021
C60027
QR60006
J60003
NOT USED

MC-Service

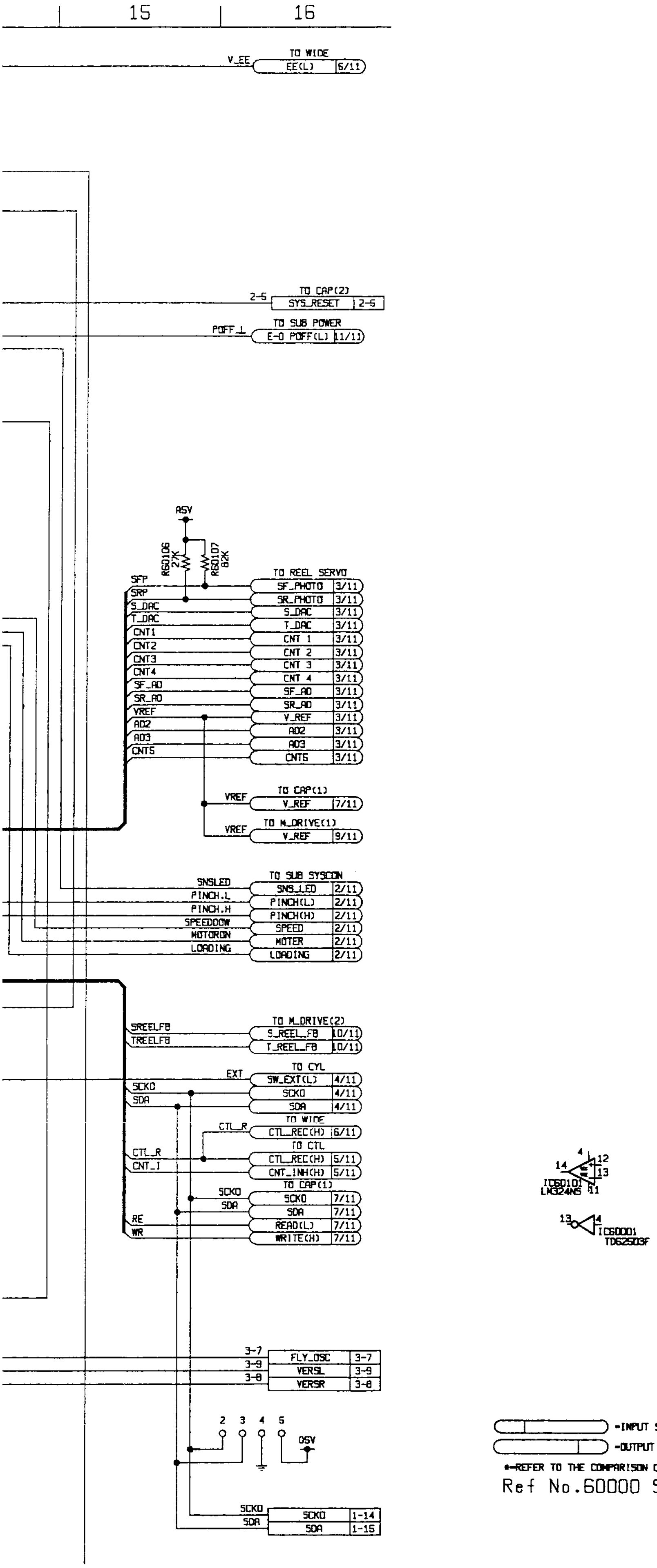

IC60003
MN1382-RTW

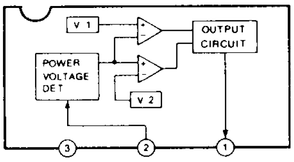

=INPUT SIGNAL

=OUTPUT SIGNAL

*=REFER TO THE COMPARISON CHART

Ref No.60000 Series.

SYSTEM CONTROL DC VOLTAGE CHART

REF. NO.	IC60001															
MODE	1	2	3	4	5	6	7	8	9	10	11	12	13	14	15	16
STOP	0	0	0	0	0	0	0	0	0	11.5	4.6	0	0	5.0	4.5	5.0
REC	0	0	0	0	0	0	4.6	0	0	0	4.6	0	0	5.0	4.5	5.0
F.F	0	0	0	0	0	0	0	0	0	11.5	4.6	0	0	5.0	4.5	5.0

REF. NO.	IC60002																			
MODE	1	2	3	4	5	6	7	8	9	10	11	12	13	14	15	16	17	18	19	20
STOP	0	4.8	0	0	0	0	0	0	0	0	0	0	4.9	0	0	4.9	0	4.7	4.9	0
REC	0	4.8	0	0	0	0	4.8	4.7	4.8	0	3.2	3.2	4.9	0	0	4.9	0	4.7	4.9	0
F.F	0	0	0	0	0	0	0	0	0	0	0	0	4.9	0	0	4.9	0	4.8	4.9	0

REF. NO.	IC60002																			
MODE	21	22	23	24	25	26	27	28	29	30	31	32	33	34	35	36	37	38	39	40
STOP	4.5	0	0	0.1	4.7	0.1	2.5	0	4.9	0	2.2	–	0	0	4.8	4.9	4.9	0	0	0
REC	4.5	0	0	0	2.4	2.3	2.6	2.5	4.9	0	2.4	–	0	0	4.8	4.9	4.9	0	0	0
F.F	4.6	0	0	0.1	2.1	2.2	2.6	5.2	4.9	0	2.4	–	0	0	4.9	4.9	4.9	0	0	4.9

REF. NO.	IC60002																			
MODE	41	42	43	44	45	46	47	48	49	50	51	52	53	54	55	56	57	58	59	60
STOP	4.8	4.8	4.8	4.8	4.8	4.8	4.8	5.0	4.6	0.2	0	4.7	4.5	4.9	4.8	4.8	0	0	0	0
REC	4.8	4.8	4.8	4.8	0	4.8	0	5.0	4.6	0.2	0.2	4.8	4.5	4.9	4.8	0	0	0	0	0
F.F	4.9	0	4.9	4.9	4.9	4.9	4.9	5.0	4.7	0.2	0.6	4.8	4.5	4.9	0	4.9	0	0	0	0

REF. NO.	IC60002																			
MODE	61	62	63	64	65	66	67	68	69	70	71	72	73	74	75	76	77	78	79	80
STOP	1.1	0.9	1.3	2.3	2.3	2.5	4.6	4.7	2.6	0.6	3.8	4.8	4.8	4.7	0.1	4.2	0	0	0	0
REC	1.1	0.9	1.0	2.3	2.3	2.5	4.6	2.4	2.6	0.6	3.8	4.9	4.9	4.8	0.1	4.3	0	0	0	0
F.F	0.7	0.9	1.0	3.7	2.7	2.3	0.6	0.5	2.6	0.6	3.8	4.9	4.9	4.9	0.1	4.3	0	0	0	0

REF. NO.	IC60002			
MODE	81	82	83	84
STOP	0	0	0	4.5
REC	0	0	0	4.5
F.F	0	0	0	4.6

REF. NO.	IC60003		
MODE	V	G	O
STOP	4.9	0	4.9
REC	4.8	0	4.8
F.F	4.9	0	4.9

REF. NO.	IC60101													
MODE	1	2	3	4	5	6	7	8	9	10	11	12	13	14
STOP	3.8	3.8	3.8	11.5	1.0	1.0	1.0	2.4	2.4	2.4	0	0.1	0.1	10.3
REC	3.8	3.8	3.8	11.5	1.0	1.0	1.0	2.4	2.4	2.4	0	0.1	0.1	0.3
F.F	3.8	3.8	3.8	11.5	1.0	1.0	1.0	2.4	2.4	2.4	0	0.1	0.1	0.3

REF. NO.	Q60001			Q60002			Q60003			Q60004			Q60005			Q60006		
MODE	E	C	B	E	C	B	E	C	B	E	C	B	E	C	B	E	C	B
STOP	0.5	12.6	0.4	11.7	0	12.2	12.4	0	11.9	0	0	0	0	0.1	0	0	4.9	0.1
REC	0.5	12.6	0.4	11.7	0	12.2	12.4	0	11.9	0	0	0	0	0	0	0	4.9	0
F.F.	0.5	12.6	0.4	11.7	0	12.2	12.4	0	11.9	0	0	0	0	0	0	0	4.9	0

REF. NO.	Q60007			Q60008		
MODE	E	C	B	E	C	B
STOP	0	4.6	0.1	0	0.1	0.1
REC	0	4.6	0.1	0	11.9	−0.7
F.F.	0	4.6	0.2	0	0.2	0.2

REF. NO.	QR60001			QR60002			QR60003			QR60004			QR60007			QR60008		
MODE	E	C	B	E	C	B	E	C	B	E	C	B	E	C	B	E	C	B
STOP	5.2	0.4	4.5	0	12.2	0	12.5	0.2	12.6	0	0.1	2.9	0	5.3	0	0	13.0	0
REC	5.1	0.4	4.5	0	12.2	0	12.5	12.4	0.1	0	0.1	0	0	5.3	0	0	0.1	4.8
F.F.	5.2	0	4.9	0	12.2	0	12.5	0.3	12.5	0	0.1	2.9	0	5.3	0	0	13.0	0

REF. NO.	QR60010			QR60013		
MODE	E	C	B	E	C	B
STOP	0	3.7	0	0	4.8	0
REC	0	0.1	4.9	0	4.8	0
F.F.	0	3.7	0	0	4.9	0

	AG-8700 AG-8600
C60020	———
C60021	———
C60026	———
C60027	———
D60008	———
D60009	———
IC60007	———
QR60006	———
QR60012	———
R60037	———
R60038	———
R60039	———

	AG-8700 AG-8600
R60055	———
R60056	———
R60057	———
R60058	———
R60059	———
R60060	———
IC60002	MN188166VCTL
J6003	0
J6004	———
R60046	———
R60050	0

	AG-8700	AG-8600
C60010	0.033(B)	———
C60011	0.0047(B)(J)	———
C60012	0.01(B)(J)	———
C60013	16V10	———
C60017	0.01	———
FL60001	VLF0630	———
L60001	470U	———
P60001	VJP1230T	———
Q60008	2SD636	———
QR60003	MRN2402	———
QR60008	MRN1404	———
QR60010	MRN1404	———

	AG-8700	AG-8600
R60025	33K(1/4W)	———
R60040	100	———
R60048	100	———
R60049	100	———
T60001	EIQ7QF002B	———

MC-Service

CYL SERVO SCHEMATIC DIAGRAM 4/11 (E3: Page CBA-5)

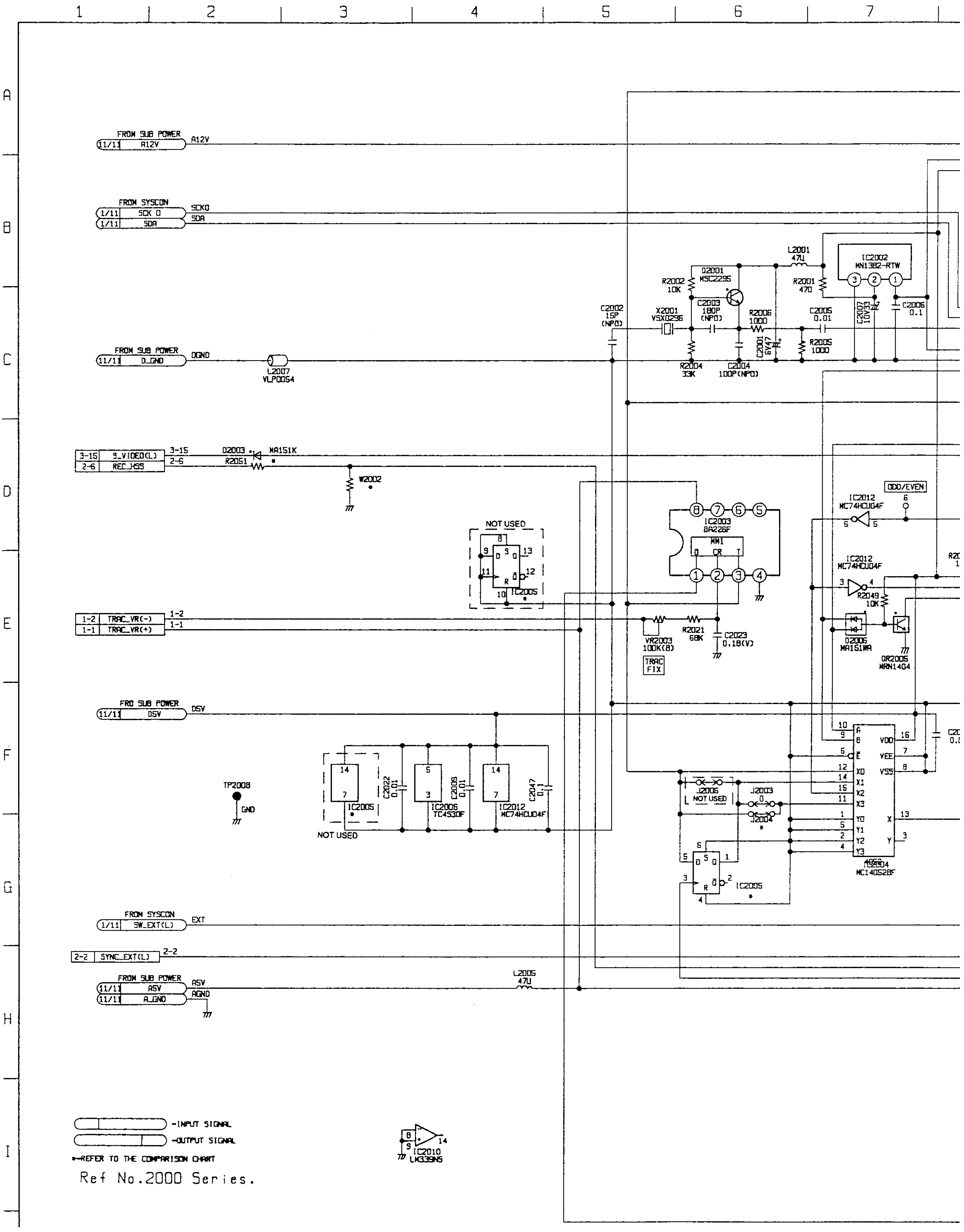

7	8	9	10	11	12	13	14

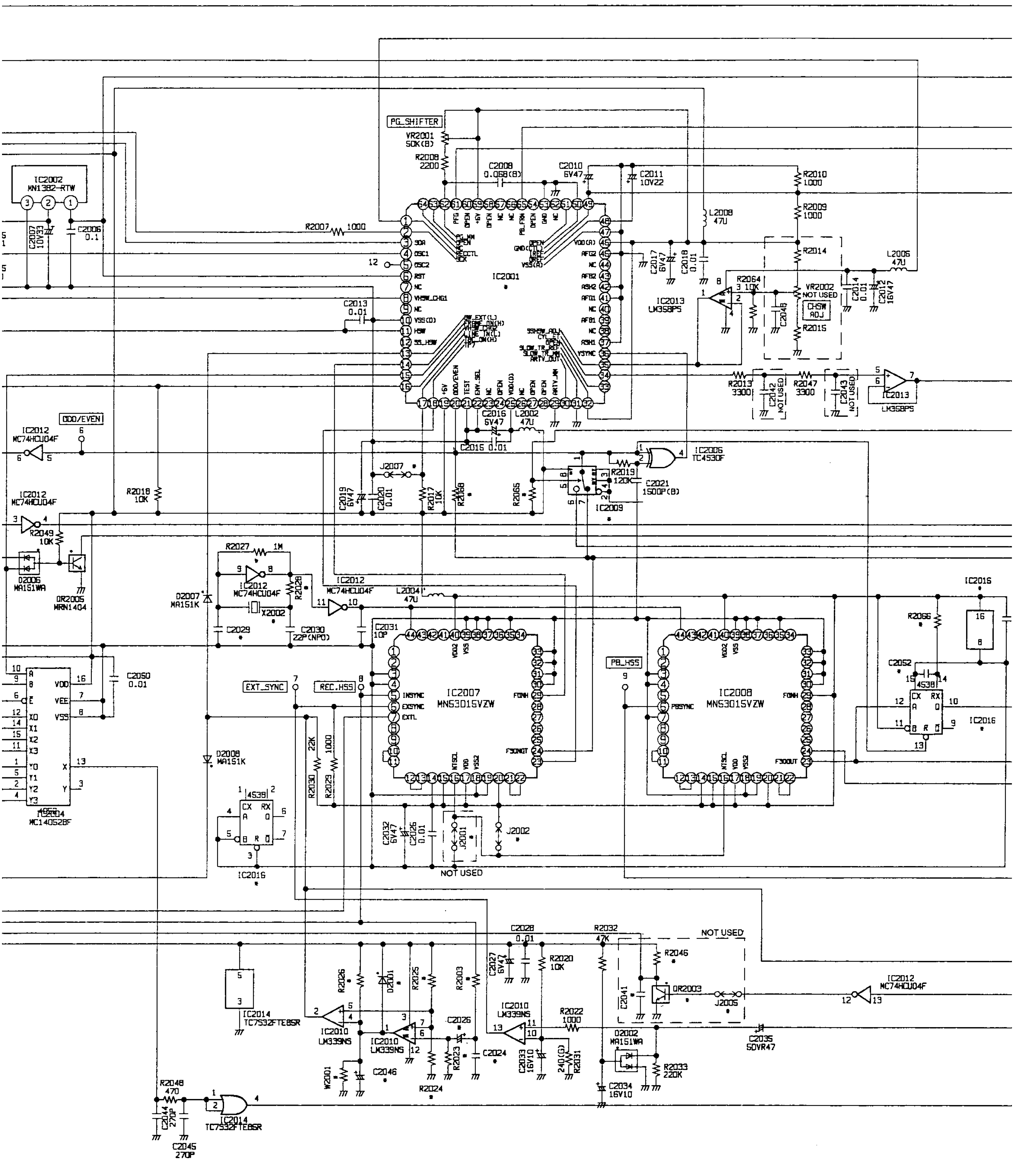

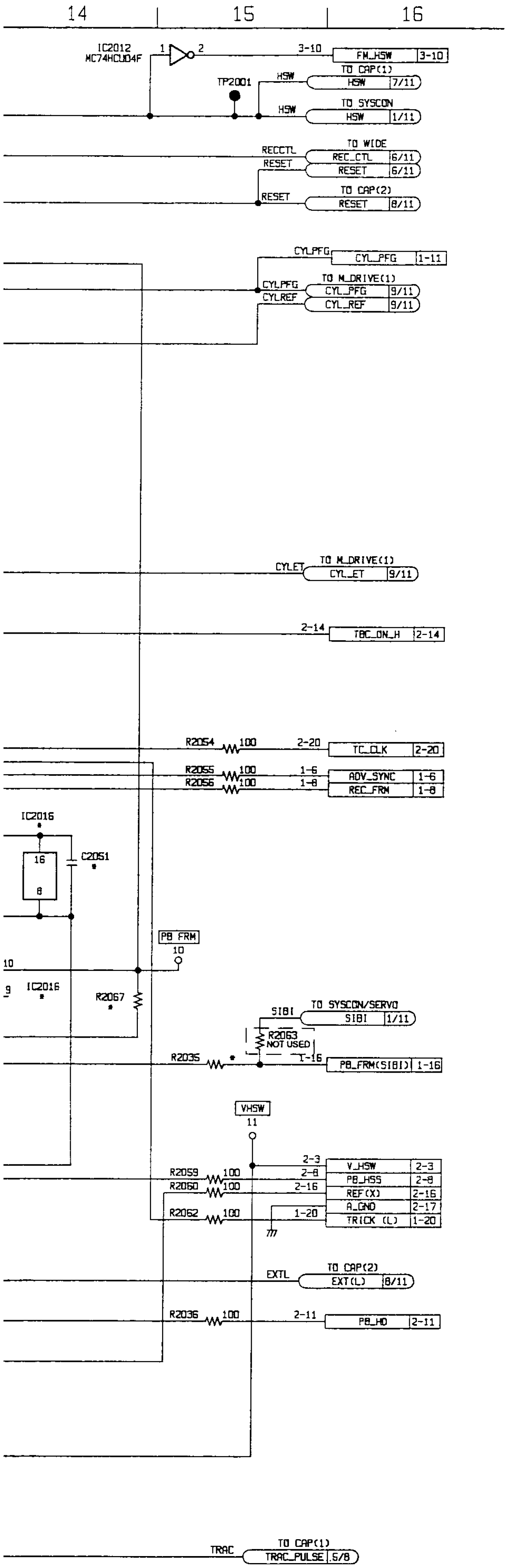

CYL SERVO DC VOLTAGE CHART

REF. NO.									
MODE	1	2	3	4	5	6	7	8	9
STOP	0	5.0	4.6	2.5	2.5	5.1	0	0	0
REC	3.1	5.0	4.6	2.5	2.5	5.1	0	0	0
F.F	0	5.0	4.6	2.5	2.5	5.2	0	5.2	0
REF. NO.									
MODE	21	22	23	24	25	26	27	28	29
STOP	0	0	0	0	5.1	0	2.6	0	0
REC	0	0	0	0	5.1	0	2.6	0	0
F.F	0	0	0	0	5.2	0	2.6	0	0
REF. NO.									
MODE	41	42	43	44	45	46	47	48	49
STOP	0	0	5.1	0	0	5.1	0	2.5	2.5
REC	0	0	5.1	0	0	5.1	0	2.5	2.5
F.F	0	0	5.2	0	0	5.2	0	2.5	2.5
REF. NO.									
MODE	61	62	63	64					
STOP	1.1	3.1	5.1	0					
REC	1.1	3.1	5.1	0					
F.F	1.1	3.1	5.2	0					
REF. NO.	IC2002								
MODE	V	G	O						
STOP	5.1	0	5.1						
REC	5.1	0	5.1						
F.F.	5.2	0	5.2						
REF. NO.									
MODE	1	2	3	4	5	6	7	8	9
STOP	0	0	0	0	0	0	0	0	0
REC	0	0	0	0	0	0	0	0	0
F.F	0	0	0	0	0	0	0	0	5.2
REF. NO.									
MODE	1	2	3	4	5				
STOP	2.6	2.6	0	0	5.1				
REC	2.6	2.6	0	0	5.1				
F.F	2.6	2.6	0	0	5.2				
REF. NO.									
MODE	1	2	3	4	5	6	7	8	9
STOP	0	0	0	0	4.6	5.1	5.1	4.8	5.1
REC	0	0	0	0	4.5	5.1	5.1	4.7	5.1
F.F	0	0	0	0	4.5	5.2	5.1	4.7	5.2
REF. NO.									
MODE	21	22	23	24	25	26	27	28	29
STOP	0	0	2.6	2.6	0	0	0	0	5.1
REC	0	0	2.5	2.6	0	0	0	0	5.1
F.F	0	0	2.5	2.6	0	0	0	0	5.2
REF. NO.									
MODE	41	42	43	44					
STOP	5.1	5.1	0	2.5					
REC	5.1	5.1	0	2.5					
F.F	5.2	5.2	0	2.5					
REF. NO.									
MODE	1	2	3	4	5	6	7	8	9
STOP	0	0	0	0	1.7	4.6	0	4.7	5.1
REC	0	0	0	0	2.2	4.6	0	4.7	5.1
F.F	0	0	0	0	1.9	4.6	0	4.7	5.1
REF. NO.									
MODE	21	22	23	24	25	26	27	28	29
STOP	0	0	2.6	2.6	0	0	0	0	5.1
REC	0	0	2.6	2.6	0	0	0	0	5.1
F.F	0	0	2.6	2.6	0	0	0	0	5.2
REF. NO.									
MODE	41	42	43	44					
STOP	5.1	5.1	0	2.5					
REC	5.1	5.1	0	2.5					
F.F	5.2	5.2	0	2.5					
REF. NO.									
MODE	1	2	3	4	5	6	7	8	9
STOP	0.5	5.1	5.0	0.5	2.5	0.2	2.5	0	0
REC	0.5	5.0	5.0	0.5	2.5	0.2	2.5	0	0
F.F	0.5	5.1	5.0	0.5	2.5	0.2	2.5	0	0
REF. NO.									
MODE	1	2	3	4	5	6	7	8	9
STOP	2.5	2.6	2.6	2.6	2.6	2.6	0	2.4	2.3
REC	2.5	2.6	2.6	2.6	2.6	2.6	0	2.4	2.3
F.F	2.6	2.6	2.6	2.6	2.6	2.6	0	2.4	2.3

IC2001											
9	10	11	12	13	14	15	16	17	18	19	20
0	0	2.5	2.6	5.1	5.1	0	3.7	0	2.5	5.1	2.6
0	0	2.6	0	5.1	5.1	0	3.7	0	2.5	5.1	2.6
0	0	2.6	2.6	5.1	5.2	0	3.7	0	2.5	5.2	2.6
IC2001											
29	30	31	32	33	34	35	36	37	38	39	40
0	0	0	5.1	0.5	2.4	0	0	0	0	5.1	0
0	0	0	5.1	0.5	2.4	0	0	0	0	5.1	0
0	0	0	5.2	0.5	2.4	0	0	0	0	5.2	0
IC2001											
49	50	51	52	53	54	55	56	57	58	59	60
.5	0	0	0	0	0	5.0	0	0	1.9	5.1	0
.5	0	3.1	0	0	0	4.9	0	0	1.9	5.1	0
.5	0	0	0	0	0	4.9	0	0	1.9	5.2	0
IC2001											
		IC2003									
		1	2	3	4	5	6	7	8		
		1.9	0.5	2.5	0	0	0	0	5.0		
		1.9	0.5	2.5	0	0	0	0	5.0		
		1.9	0.5	2.6	0	0	0	0	5.0		
IC2004											
9	10	11	12	13	14	15	16				
0	0	2.6	2.6	2.5	2.6	2.6	5.1				
0	0	2.6	2.6	2.6	2.6	2.6	5.1				
.2	0	2.6	2.6	2.6	2.6	2.6	5.2				
IC2006											
IC2007											
9	10	11	12	13	14	15	16	17	18	19	20
.1	0	0	0	0	5.1	5.1	5.1	5.1	0	0	5.1
.1	0	0	0	0	5.1	5.1	5.1	5.1	0	0	5.1
.2	0	0	0	0	5.2	5.2	5.1	5.2	0	0	5.2
IC2007											
29	30	31	32	33	34	35	36	37	38	39	40
.1	0	0	0	0	0	0	0	0	0	0	5.1
.1	0	0	0	0	0	0	0	0	0	0	5.1
.2	0	0	0	0	5.2	0	0	0	0	0	5.2
IC2007											
IC2008											
9	10	11	12	13	14	15	16	17	18	19	20
.1	0	0	0	0	5.1	5.1	5.1	5.1	0	0	5.1
.1	0	0	0	0	5.1	5.1	5.1	5.1	0	0	5.1
.1	0	0	0	0	5.2	5.2	5.1	5.2	0	0	5.2
IC2008											
29	30	31	32	33	34	35	36	37	38	39	40
.1	0	0	0	0	5.1	0	0	0	0	0	5.1
.1	0	0	0	0	5.1	0	0	0	0	0	5.1
.2	0	0	0	0	5.2	0	0	0	0	0	5.2
IC2008											
IC2010											
9	10	11	12	13	14						
0	0.1	0.3	0	5.1	0						
0	0.1	0.4	0	5.1	0						
0	0.1	0.2	0	5.2	0						
IC2012											
9	10	11	12	13	14						
.3	2.5	2.4	5.1	0	5.1						
.3	2.5	2.4	5.1	0	5.1						
.3	2.5	2.4	4.9	0	5.2						

REF. NO.	IC2013									
MODE	1	2	3	4	5	6	7	8		
STOP	0	0	0	0	2.4	2.4	2.4	11.7		
REC	0	0	0	0	2.4	2.4	2.4	11.7		
F.F.	0	0	0	0	2.4	2.4	2.4	11.7		
REF. NO.	IC2014									
MODE	1	2	3	4	5					
STOP	2.6	2.6	0	2.5	5.0					
REC	2.6	2.6	0	2.5	5.0					
F.F.	2.6	2.6	0	2.5	5.0					
REF. NO.	Q2001									
MODE	E	C	B							
STOP	3.2	5.1	–							
REC	3.2	5.1	–							
F.F.	3.2	5.1	–							
REF. NO.	QR2005									
MODE	E	C	B							
STOP	0	3.5	0.6							
REC	0	3.5	0.6							
F.F.	0	3.5	0.6							

IC2002
MN1382-RTW

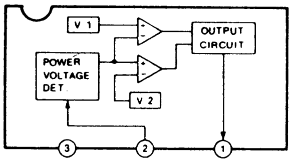

IC2004
MC14052BF

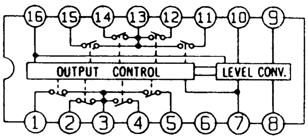

	AG-8700	AG-8600
C2024	1000P	———
C2026	50V1	50V1
C2029	33P(NPO)	33P(NPO)
C2041	———	———
C2046	50VR47	50VR47
C2051	———	———
C2052	———	———
D2001	MA151K	———
IC2001	MN6742VMEP	MN6742VMEP
IC2005	———	———
J2001	———	———
J2002	0	0

	AG-8700	AG-8600
J2004	0	0
J2005	———	———
IC2009	TC4W53F	———
IC2016	———	———
QR2003	———	———
R2003	33K	———
R2023	220K	———
R2024	10K	———
R2025	10K	———
R2026	180K	———
R2028	5600	5600
R2035	100	100

	AG-8700	AG-8600
R2046	———	———
R2051	100	———
R2065	———	———
R2066	0	———
R2057	0	0
R2068	———	0
W2001	———	0
W2002	———	0
X2002	VSX0066-D	VSX0066-D
J2007	———	0

REEL SERVO SCHEMATIC DIAGRAM 3/11 (E3: Page CBA-5)

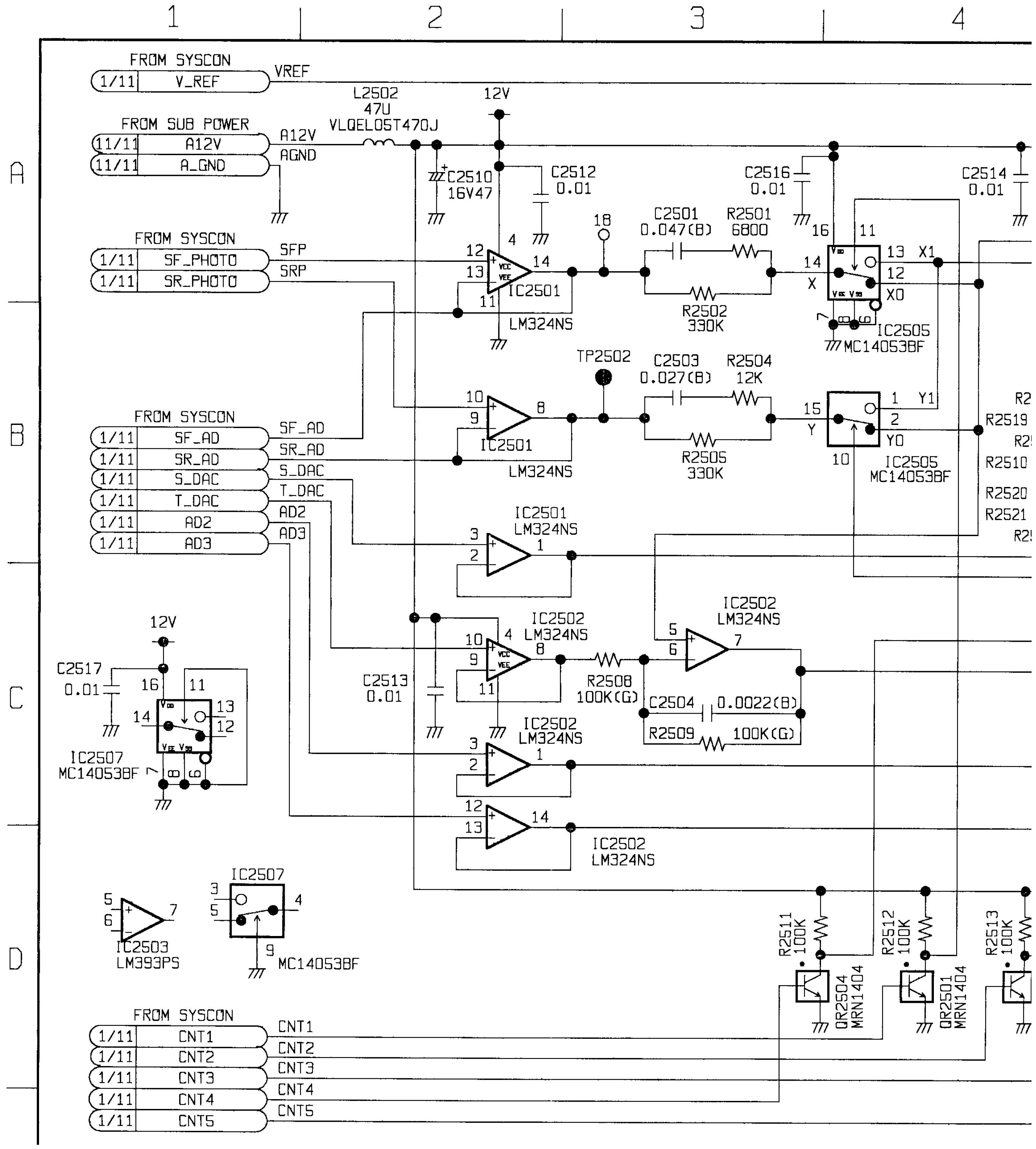

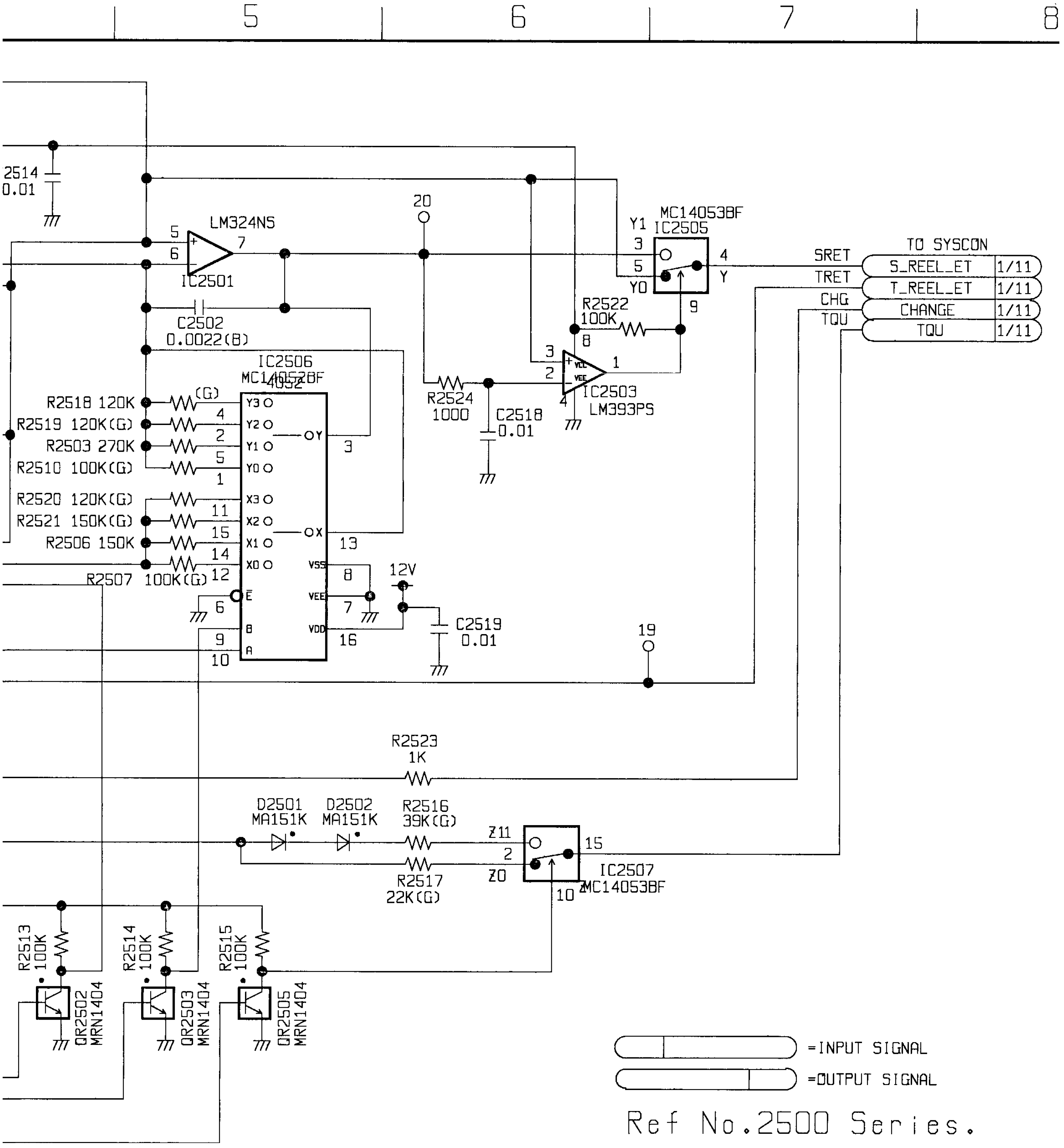

Ref No.2500 Series.

IC2506
MC14052BF

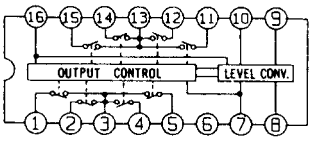

REEL SERVO DC VOLTAGE CHART

REF. NO.	IC2501									
MODE	1	2	3	4	5	6	7	8	9	10
STOP	2.4	2.4	2.3	11.7	2.4	2.4	2.3	4.6	4.6	4.6
REC	2.5	2.5	2.5	11.7	2.4	2.4	2.2	4.6	4.6	4.6
F.F	2.4	2.4	2.3	11.7	2.4	2.4	2.3	0.6	0.6	0.6
REF. NO.	IC2501									
MODE	11	12	13	14						
STOP	0	4.7	4.7	4.7						
REC	0	2.4	2.4	2.4						
F.F	0	0.5	0.5	0.5						
REF. NO.	IC2502									
MODE	1	2	3	4	5	6	7	8	9	10
STOP	1.0	1.0	1.0	11.7	2.4	2.4	2.4	2.4	2.4	2.4
REC	2.4	2.4	2.3	11.7	2.4	2.4	2.4	2.4	2.4	2.4
F.F	3.8	3.8	3.8	11.7	2.4	2.4	2.0	2.8	2.7	2.7
REF. NO.	IC2502									
MODE	11	12	13	14						
STOP	0	0.9	1.0	1.0						
REC	0	1.0	1.0	1.0						
F.F	0	0.9	1.0	1.0						
REF. NO.	IC2503									
MODE	1	2	3	4	5	6	7	8		
STOP	11.6	2.2	2.4	0	0.5	0.5	0	11.7		
REC	11.6	2.2	2.4	0	0.5	0.5	0	11.7		
F.F	11.6	2.3	2.4	0	1.5	1.5	0	11.7		
REF. NO.	IC2505									
MODE	1	2	3	4	5	6	7	8	9	10
STOP	2.4	2.4	2.3	2.3	2.4	0	0	0	11.6	0
REC	2.4	2.4	2.2	2.2	2.4	0	0	0	11.6	0
F.F	2.4	2.4	2.3	2.3	2.4	0	0	0	11.6	0
REF. NO.	IC2505									
MODE	11	12	13	14	15	16				
STOP	0	2.4	2.4	2.4	2.4	11.7				
REC	11.6	2.4	2.4	2.4	2.4	11.7				
F.F	0	2.4	2.4	2.4	2.4	11.7				
REF. NO.	IC2506									
MODE	1	2	3	4	5	6	7	8	9	10
STOP	2.3	2.1	2.1	2.3	2.3	0	0	0	11.6	0
REC	2.3	2.2	2.2	2.3	2.3	0	0	0	11.6	0
F.F	2.3	2.3	2.3	2.3	2.3	0	0	0	0	0
REF. NO.	IC2506									
MODE	11	12	13	14	15	16				
STOP	2.6	2.6	2.4	2.5	2.4	11.7				
REC	2.5	2.5	2.4	2.5	2.4	11.7				
F.F	2.3	2.4	2.4	2.3	2.3	11.7				
REF. NO.	IC2507									
MODE	1	2	3	4	5	6	7	8	9	10
STOP	1.4	1.0	0.1	0.1	0.1	0	0	0	0	11.4
REC	0.8	0.1	0.1	0.1	0.1	0	0	0	0	0
F.F	0	1.2	0.1	0.1	0.1	0	0	0	0	11.6
REF. NO.	IC2507									
MODE	11	12	13	14	15	16				
STOP	0	0.1	0.1	0.1	0.1	11.7				
REC	0	0.1	0.1	0.1	0.1	11.7				
F.F	0	0.1	0.1	0.1	0.1	11.7				
REF. NO.	QR2501			QR2502			QR2503			
MODE	E	C	B	E	C	B	E	C	B	
STOP	0	0	4.9	0	0	4.9	0	0	4.9	
REC	0	11.6	0	0	0	4.9	0	11.6	0	
F.F.	0	0	4.9	0	0	4.9	0	0	4.9	
REF. NO.	QR2504			QR2505						
MODE	E	C	B	E	C	B				
STOP	0	0	4.9	0	11.4	0				
REC	0	0	4.9	0	0	4.9				
F.F.	0	0	4.9	0	11.6	0				

CTL AMP SCHEMATIC DIAGRAM 5/11 (E3: Page CBA-5)

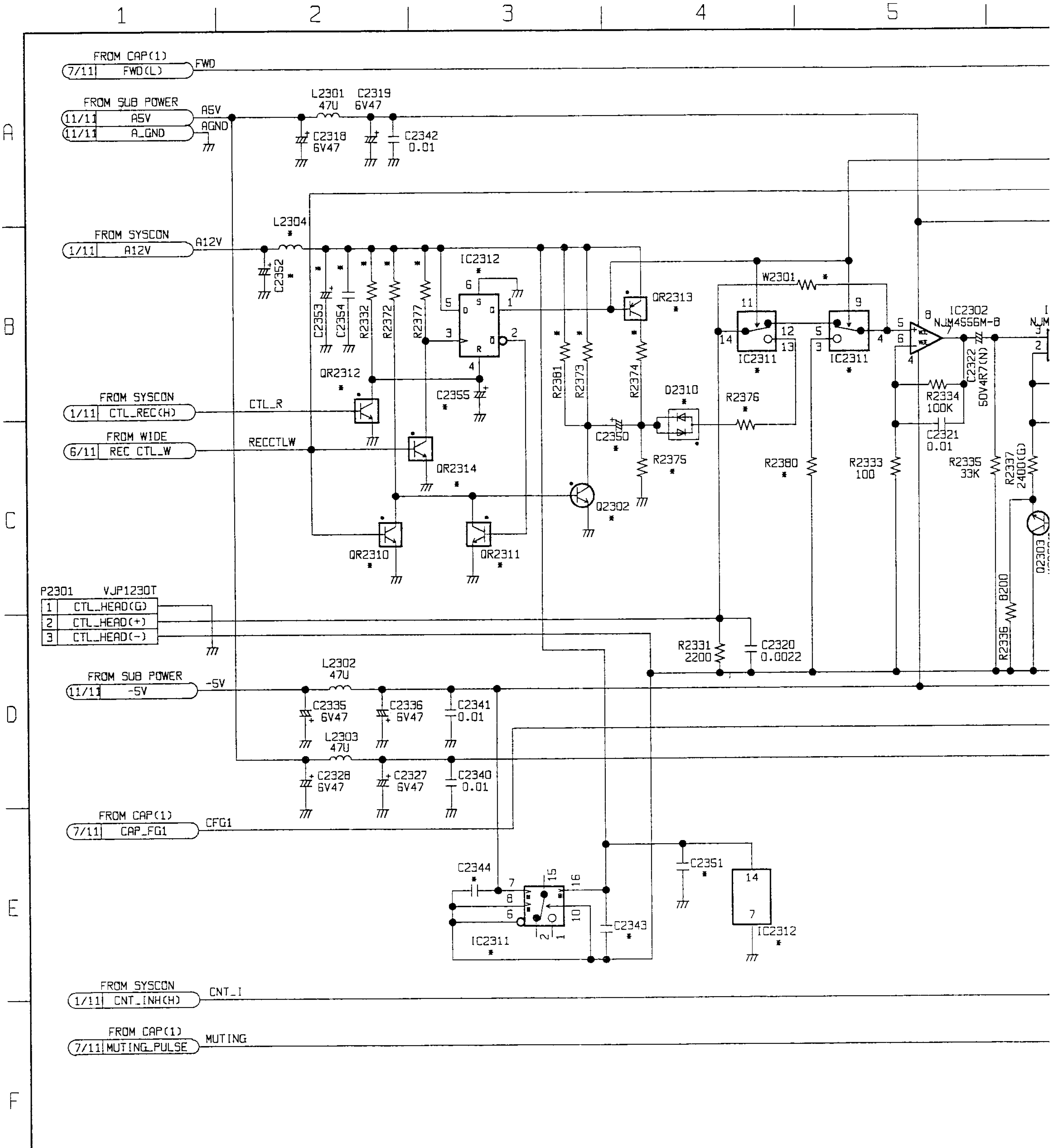

	AG-8700	AG-8600
C2343	0.01	———
C2344	0.01	———
C2350	16V47	———
C2351	0.01	———
C2352	16V47	———
C2353	16V47	———
C2354	0.01	———
C2355	50V1	———
D2310	MA153	———
IC2311	MC14053BF	———
IC2312	MC14013BF	———

	AG-8700	AG-8600
L2304	47U	———
Q2302	MSD601	———
QR2310	MRN1403	———
QR2311	MRN1404	———
QR2312	MRN1404	———
QR2313	MRN2404	———
QR2314	MRN1404	———
R2332	68K	———
R2372	15K	———
R2373	1200(1/4W)	———
R2374	4700	———

	AG-8700	AG-8600
R2375	5600	———
R2376	560	———
R2377	47K	———
R2378	150K	———
R2380	100	———
R2381	1200(1/4W)	———
W2301	———	0

MC-Service

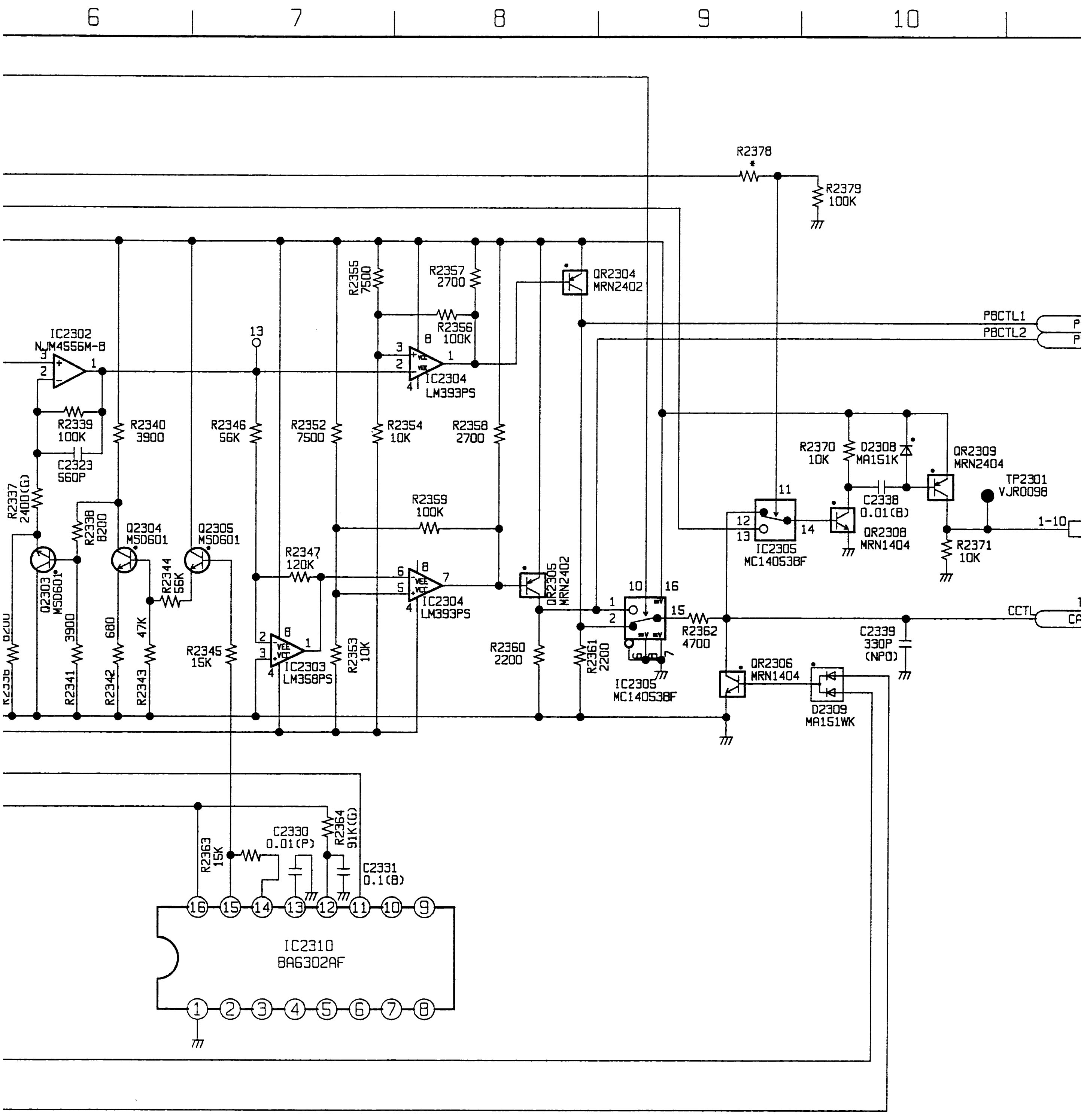

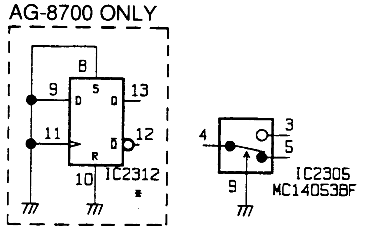

-INPUT SIGNAL

-OUTPUT SIGNAL

*-REFER TO THE COMPARISON CHART

Ref No.2300 Series.

TO WIDE
PBCTL1 6/11
PBCTL2 6/11

J1
38

1-10 CTL_PULSE 1-10

TO CAP(1)
CAP_CTL 7/11

CTL AMP DC VOLTAGE CHART

REF. NO. / MODE																		
REF. NO.	IC2302									IC2303								
MODE	1	2	3	4	5	6	7	8		1	2	3	4	5	6	7	8	
STOP	0.1	0	0	−5.0	0	0	−0.1	5.0		−0.2	0	0	−5.0	0.3	0.2	3.9	5.0	
REC	0	0	0	−5.0	0	0	−0.1	5.0		−0.1	0	0	−5.0	0.3	0.3	3.9	5.0	
F.F.	0.6	0	0	−5.0	0	0	−0.1	5.0		−1.5	−0.1	0	−5.0	0.3	0.3	3.9	5.0	
REF. NO.	IC2304																	
MODE	1	2	3	4	5	6	7	8										
STOP	4.9	0.1	0.9	−5.0	0.9	0	4.9	5.0										
REC	4.9	0	0.9	−5.0	0.9	0	4.9	5.0										
F.F	0	0.5	0.7	−0.5	0.7	−1.4	1.4	5.0										
REF. NO.	IC2305																	
MODE	1	2	3	4	5	6	7	8	9	10	11	12	13	14	15	16		
STOP	0	0	0	0	0	0	0	0	0	0	0	0	0	0	0	5.0		
REC	0	0	0.4	0.4	0.4	0	0	0	0	0	4.6	0	3.1	3.0	0	5.0		
F.F	1.9	2.7	0	0	0	0	0	0	0	0	0	2.4	0	2.4	2.6	5.0		
REF. NO.	IC2310																	
MODE	1	2	3	4	5	6	7	8	9	10	11	12	13	14	15	16		
STOP	0	1.3	1.3	0	1.5	4.7	0	0	0.7	0.5	0	5.0	3.4	2.6	1.7	5.1		
REC	0	1.3	0.2	0	0.9	4.4	0	0	1.3	2.0	2.5	0.3	0.6	2.6	3.8	5.1		
F.F	0	1.3	0.2	0	0.9	4.4	0	0	0	0	5.1	5.0	3.4	2.6	1.7	5.0		
REF. NO.	IC2311																	
MODE	1	2	3	4	5	6	7	8	9	10	11	12	13	14	15	16		
STOP	0	0	0	0	0	0	−5.0	0	0	0	0	0	5.9	0	0	11.7		
REC	0	0	0	0	0	0	−5.0	0	11.7	0	11.7	0	0	0	0	11.7		
F.F	0	0	0	0	0	0	−5.0	0	0	0	0	0	5.9	0	0	11.7		
REF. NO.	IC2312																	
MODE	1	2	3	4	5	6	7	8	9	10	11	12	13	14				
STOP	0	11.6	11.6	11.6	11.7	0	0	0	0	0	0	0	11.7	11.7				
REC	11.7	0	4.6	0	11.7	0	0	0	0	0	0	0	11.7	11.7				
F.F	0	11.6	11.6	11.6	11.7	0	0	0	0	0	0	0	11.7	11.7				
REF. NO.	Q2302			Q2303			Q2304			Q2305								
MODE	E	C	B	E	C	B	E	C	B	E	C	B						
STOP	0	11.7	0	0	0	0.6	0	3.5	0.5	1.2	5.0	1.7						
REC	0	5.6	0.3	0	0	0.3	0.7	0.8	1.3	3.2	5.0	3.7						
F.F.	0	11.7	0	0	0	0.6	0	3.5	0.5	1.2	5.0	1.7						
REF. NO.	QR2304			QR2305			QR2306			QR2308			QR2309			QR2310		
MODE	E	C	B	E	C	B	E	C	B	E	C	B	E	C	B	E	C	B
STOP	5.0	0	4.9	5.0	0	4.9	0	0	4.7	0	5.0	0	5.0	0	5.0	0	0	0
REC	5.0	0	4.9	5.0	0	4.9	0	0	0	0	2.0	3.0	5.0	0.1	4.9	0	0.3	3.1
F.F.	5.0	2.7	−0.2	5.0	1.9	1.4	0	2.6	0	0	1.8	2.4	5.0	2.9	3.7	0	0	0
REF. NO.	QR2311			QR2312			QR2313			QR2314								
MODE	E	C	B	E	C	B	E	C	B	E	C	B						
STOP	0	0	11.6	0	11.6	0	11.7	11.7	0	0	11.6	0						
REC	0	0.3	0	0	0	4.8	11.7	0.1	11.7	0	4.6	3.1						
F.F.	0	0	11.6	0	11.6	0	11.7	11.7	0	0	11.6	0						

IC2310
BA6302AF

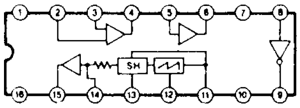

WIDE SCHEMATIC DIAGRAM 6/11 (E3: Page CBA-5)

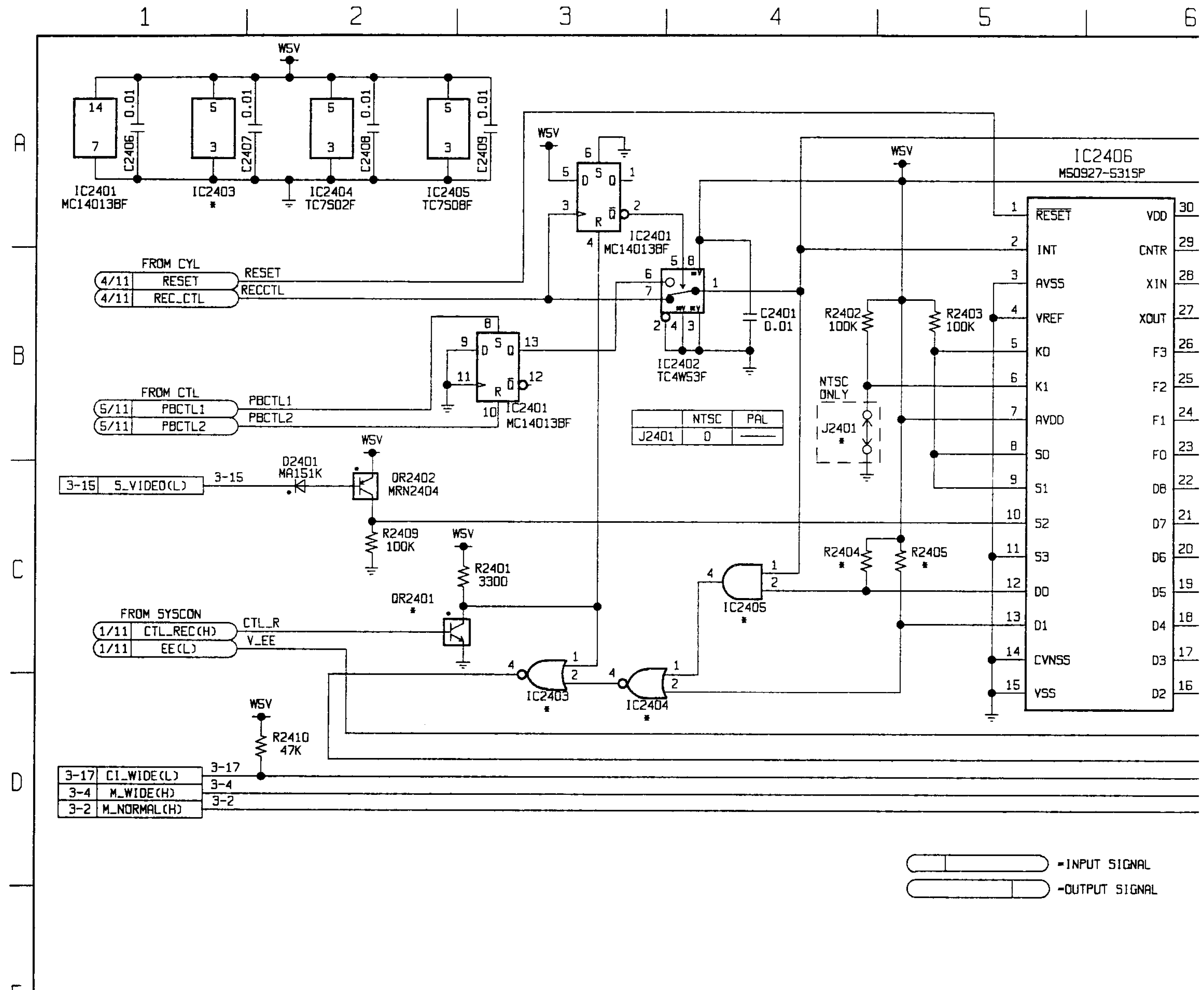

	NTSC	PAL
J2401	0	———

	AG-8700	AG-8600
J2401	———	———
IC2403	TC7S02F	———
IC2404	TC7S02F	———
IC2405	TC7S02F	———
QR2401	MRN1404	———
R2404	47K	———
R2405	47K	———

MC-Service

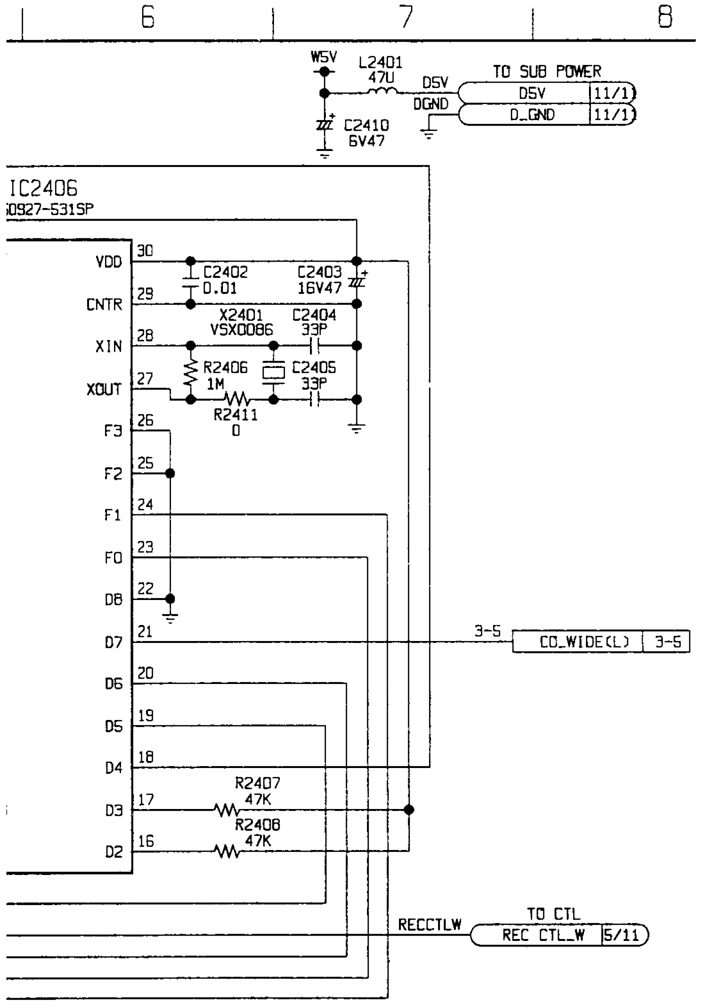

INPUT SIGNAL
OUTPUT SIGNAL

*-REFER TO THE COMPARISON CHART

Ref No.2400 Series.

WIDE DC VOLTAGE CHART

REF. NO.	IC2401									
MODE	1	2	3	4	5	6	7	8	9	10
STOP	0	5.1	0	5.1	5.1	0	0	0	0	0
REC	5.1	0	3.1	0.1	5.1	0	0	0	0	0
F.F	0	5.1	0	5.2	5.2	0	0	2.7	0	1.9
REF. NO.	IC2401									
MODE	11	12	13	14						
STOP	0	0	5.1	5.1						
REC	0	5.1	0	5.1						
F.F	0	2.0	3.1	5.1						
REF. NO.	IC2402									
MODE	1	2	3	4	5	6	7	8		
STOP	5.1	0	0	0	5.1	5.1	0	5.1		
REC	3.1	0	0	0	0	0	3.1	5.1		
F.F	3.1	0	0	0	5.2	3.2	0	5.2		
REF. NO.	IC2403									
MODE	1	2	3	4	5					
STOP	5.1	0	0	0	5.1					
REC	0.1	2.1	0	3.1	5.1					
F.F	5.2	0	0	0	5.2					
REF. NO.	IC2404									
MODE	1	2	3	4	5					
STOP	5.1	0	0	0	5.1					
REC	0.4	3.1	0	2.1	5.1					
F.F	0	5.2	0	0	5.2					
REF. NO.	IC2405									
MODE	1	2	3	4	5					
STOP	5.1	5.1	0	5.1	5.1					
REC	3.1	1.8	0	0.4	5.1					
F.F	3.2	0	0	0	5.2					
REF. NO.	IC2406									
MODE	1	2	3	4	5	6	7	8	9	10
STOP	5.1	5.1	0	0	5.1	0	5.1	5.1	5.1	5.1
REC	5.1	3.1	0	0	5.1	5.0	5.1	5.1	5.1	5.1
F.F	5.2	3.1	0	0	5.1	5.1	5.2	5.1	5.1	5.1
REF. NO.	IC2406									
MODE	11	12	13	14	15	16	17	18	19	20
STOP	0	5.1	0	0	0	5.1	5.1	5.1	0	5.1
REC	0	1.8	3.1	0	0	5.1	5.1	3.1	0	5.1
F.F	0	5.1	5.2	0	0	5.2	5.2	3.2	0	5.1
REF. NO.	IC2406									
MODE	21	22	23	24	25	26	27	28	29	30
STOP	4.8	0	0	0	0	0	2.5	2.5	0	5.1
REC	4.8	0	0	0	0	0	2.5	2.5	0	5.1
F.F	4.8	0	0	0	0	0	2.5	2.5	0	5.2
REF. NO.	QR2401			QR2402						
MODE	E	C	B	E	C	B				
STOP	0	5.1	0	5.1	5.1	3.7				
REC	0	0.1	4.8	5.1	5.1	3.7				
F.F.	0	5.2	0	5.1	5.1	3.7				

CAPSTAN SERVO-1 SCHEMATIC DIAGRAM 7/11 (E3: Page CBA-5)

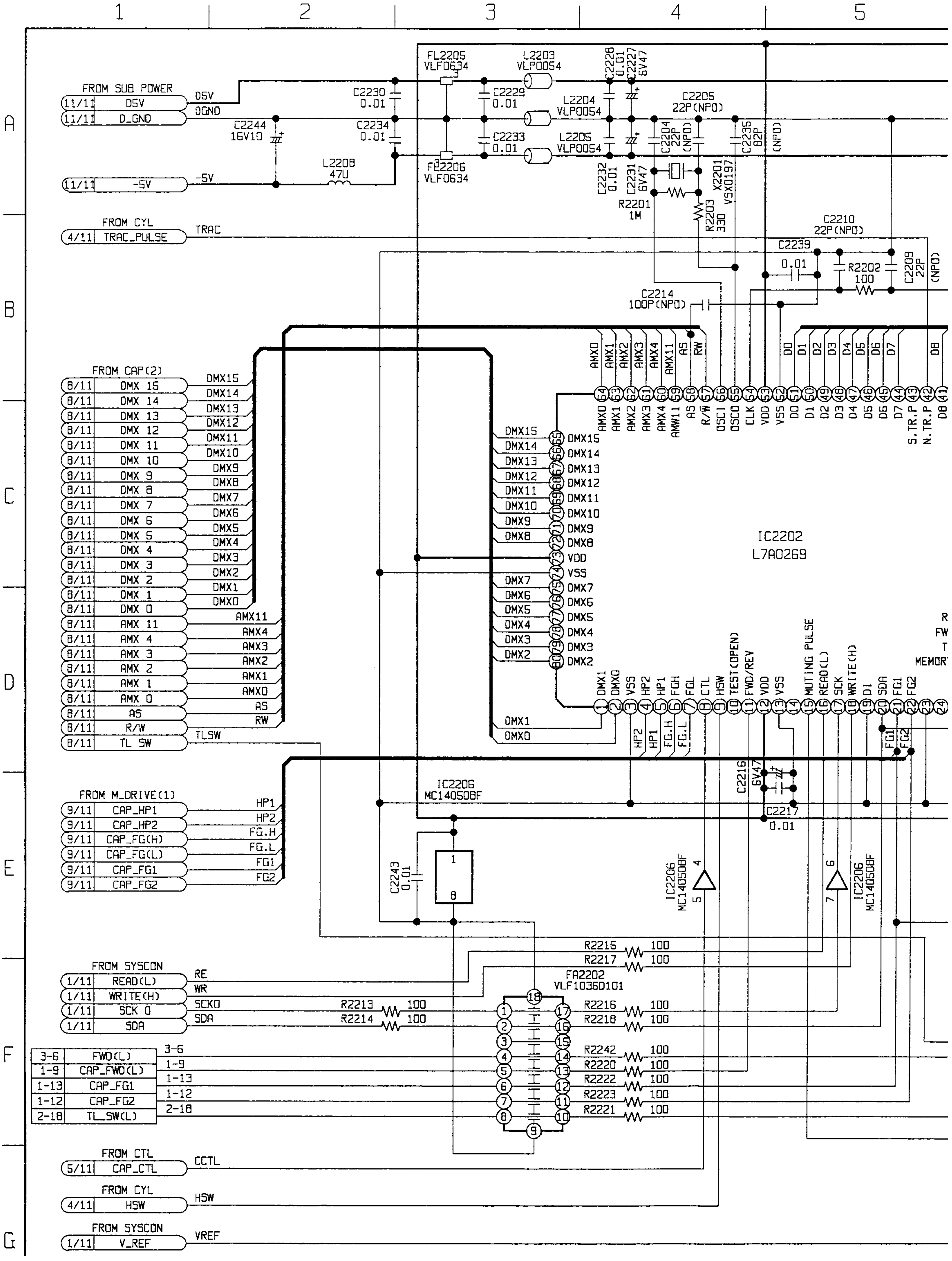

-5)

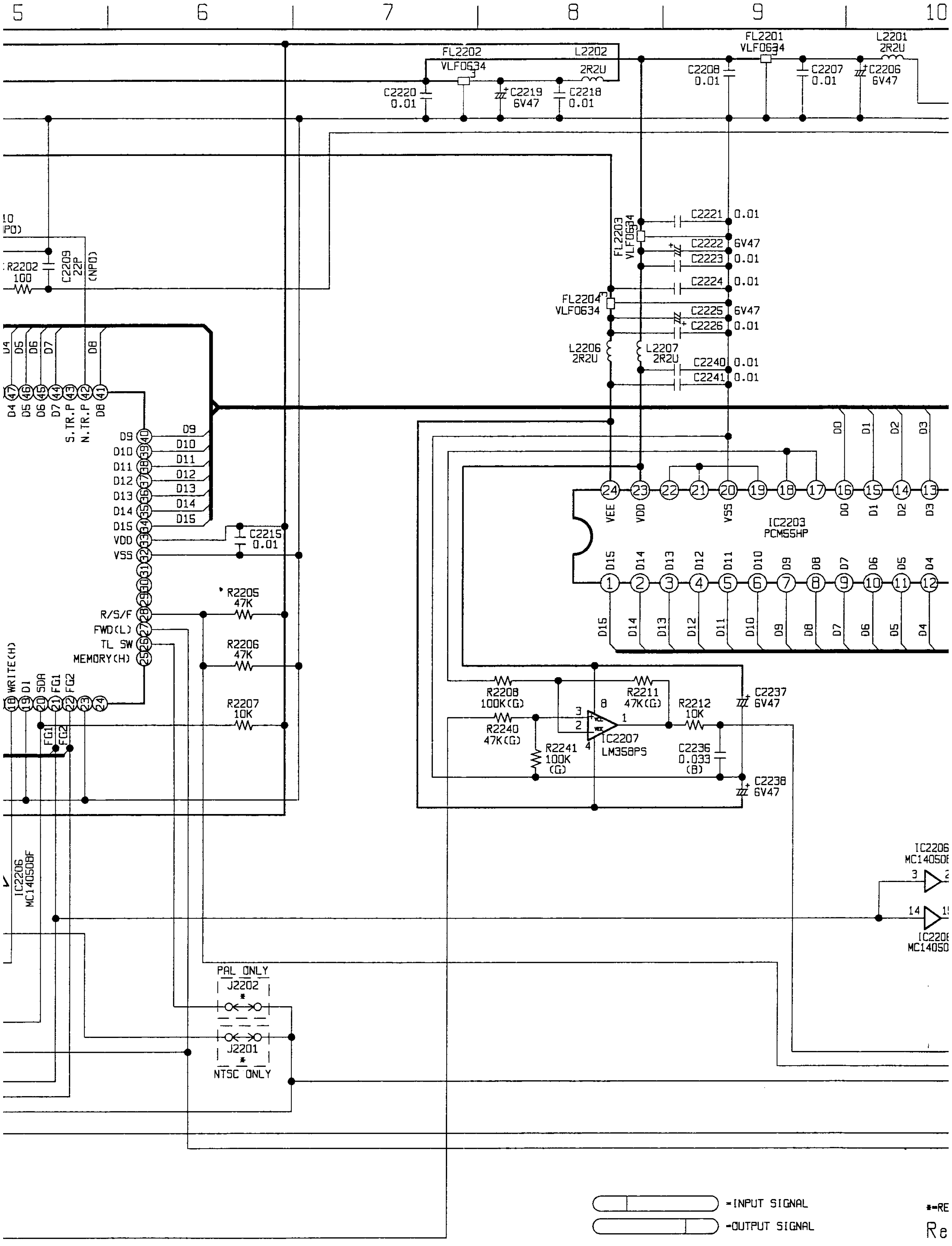
5
6
7
8
9
10
FL2202
VLF0634
L2202
2R2U
C2220
0.01
C2219
6V47
C2218
0.01
FL2201
VLF0634
C2208
0.01
C2207
0.01
L2201
2R2U
C2206
6V47
R2202
100
C2209
22P
(NPO)
FL2203
VLF0634
C2221 0.01
C2222 6V47
C2223 0.01
C2224 0.01
FL2204
VLF0634
C2225 6V47
C2226 0.01
L2206
2R2U
L2207
2R2U
C2240 0.01
C2241 0.01
D4 D5 D6 D7 D8
S.TR.P
N.TR.P
D9
D10
D11
D12
D13
D14
D15
VDD
VSS
C2215
0.01
R/S/F
FWD(L)
TL SW
MEMORY(H)
R2205
47K
R2206
47K
R2207
10K
WRITE(H)
D1
SDA
FG1
FG2
VEE
VDD
VSS
D0 D1 D2 D3
IC2203
PCM55HP
R2208
100K(G)
R2211
47K(G)
R2212
10K
C2237
6V47
R2240
47K(G)
R2241
100K
(G)
IC2207
LM358PS
C2236
0.033
(B)
C2238
6V47
IC2206
MC14050BF
PAL ONLY
J2202
J2201
NTSC ONLY
=INPUT SIGNAL
=OUTPUT SIGNAL
*=RE
Re

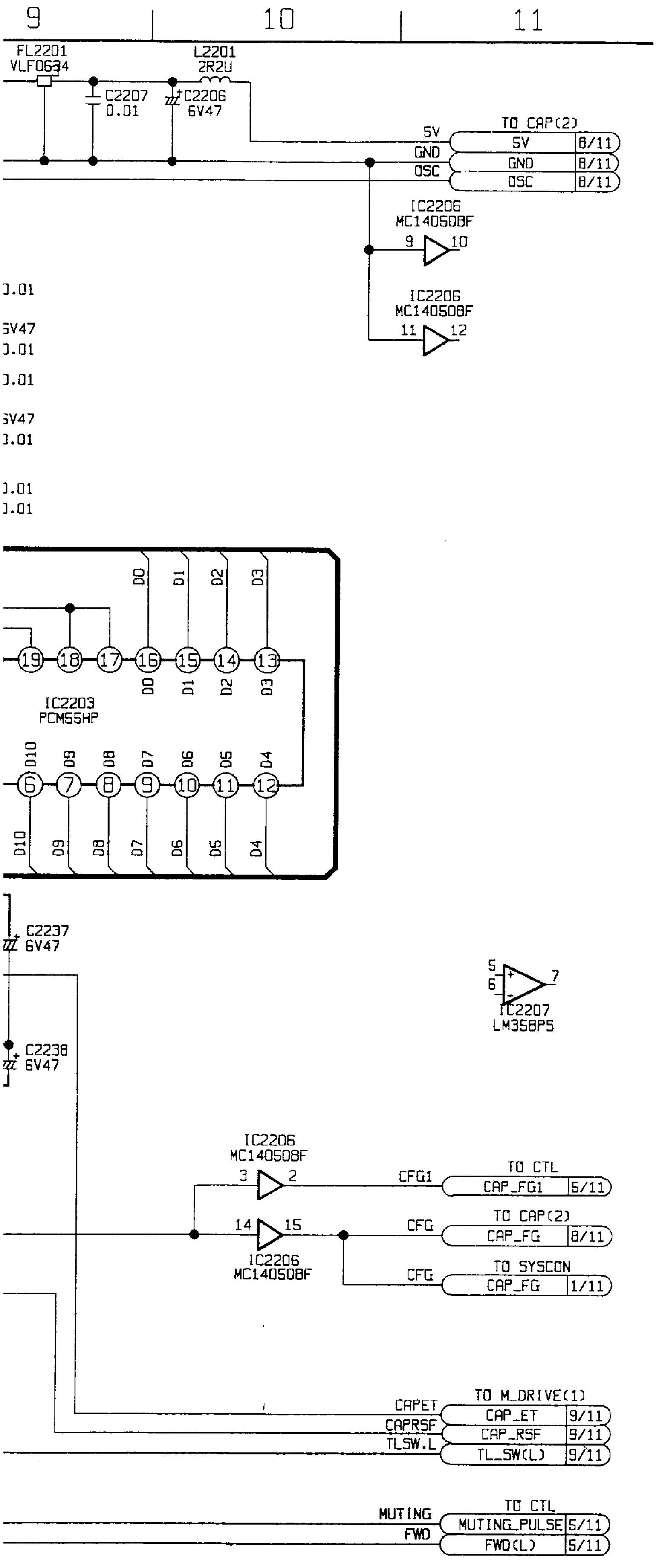

NPUT SIGNAL

JTPUT SIGNAL

*-REFER TO THE COMPARISON CHART

Ref No. 2200 Serise.

CAPSTAN SERVO-1 DC VOLTAGE CHART

REF. NO.	IC2202									
MODE	1	2	3	4	5	6	7	8	9	10
STOP	4.8	2.2	0	5.0	5.0	0	2.0	0	2.6	5.1
REC	4.2	3.0	0	2.6	2.6	2.5	2.5	0	2.5	5.1
F.F	2.6	2.1	0	2.6	0	5.0	2.4	2.6	2.6	5.1
REF. NO.	IC2202									
MODE	11	12	13	14	15	16	17	18	19	20
STOP	5.1	5.1	0	0	5.1	4.5	5.0	0	0	4.6
REC	0	5.1	0	0	0	4.5	5.0	0	0	4.6
F.F	0	5.2	0	0	0	4.6	5.0	0	0	4.6
REF. NO.	IC2202									
MODE	21	22	23	24	25	26	27	28	29	30
STOP	0	4.5	0	5.1	0	5.1	0	0	0	0
REC	2.3	2.3	0	5.1	0	0	0	0	0	0
F.F	5.0	4.5	0	5.2	0	5.1	0	0	0	0
REF. NO.	IC2202									
MODE	31	32	33	34	35	36	37	38	39	40
STOP	0	0	5.1	5.1	0	0	5.1	5.1	5.1	0
REC	0	0	5.1	0	5.1	5.1	0	0	5.1	0
F.F	0	0	5.2	5.2	0	0	0	0	0	0
REF. NO.	IC2202									
MODE	41	42	43	44	45	46	47	48	49	50
STOP	5.1	1.9	5.1	0	5.1	5.1	0	5.1	5.1	5.1
REC	2.9	1.9	5.1	2.7	2.7	2.6	2.7	2.6	2.7	2.6
F.F	0	1.9	5.2	0	0	0	0	0	0	0
REF. NO.	IC2202									
MODE	51	52	53	54	55	56	57	58	59	60
STOP	0	0	5.1	1.5	2.1	2.2	5.0	3.2	0.5	4.1
REC	2.7	0	5.1	1.9	1.9	2.2	5.0	2.8	0.3	1.9
F.F	0	0	5.2	1.6	2.1	2.2	5.0	3.2	0.5	4.5
REF. NO.	IC2202									
MODE	61	62	63	64	65	66	67	68	69	70
STOP	0.9	0.8	0.9	0.9	3.4	2.4	2.2	2.3	3.4	3.6
REC	2.1	3.6	2.8	2.4	4.2	4.4	3.7	3.5	3.6	3.0
F.F	0.8	1.0	0.5	0.3	2.4	3.7	3.7	3.7	3.7	3.3
REF. NO.	IC2202									
MODE	71	72	73	74	75	76	77	78	79	80
STOP	4.0	2.2	5.1	0	2.9	2.8	2.8	4.3	2.8	4.3
REC	4.1	2.9	5.1	0	3.6	3.7	3.6	3.6	4.1	3.7
F.F	3.1	3.1	5.2	0	2.9	2.9	3.0	2.9	2.9	2.2
REF. NO.	IC2203									
MODE	1	2	3	4	5	6	7	8	9	10
STOP	0	5.1	0	0	5.1	0	0	5.1	0	5.1
REC	0	5.1	5.1	0	5.1	5.1	3.8	2.2	2.6	2.7
F.F	5.2	0	0	0	0	0	0	0	0	0
REF. NO.	IC2203									
MODE	11	12	13	14	15	16	17	18	19	20
STOP	5.1	0	0	5.1	0	0	0	0	0	0
REC	2.7	2.7	2.7	2.7	2.7	2.7	0.6	0.6	0	0
F.F	0	0	0	0	0	0	0	0	0	0
REF. NO.	IC2203									
MODE	21	22	23	24						
STOP	0	0	5.1	−5.0						
REC	0	0	5.1	−5.0						
F.F	0	0	5.1	−5.0						
REF. NO.	IC2206									
MODE	1	2	3	4	5	6	7	8	9	10
STOP	5.1	5.1	0	0	0	5.0	4.7	0	0	0
REC	5.1	2.5	2.3	0	0	5.0	4.7	0	0	0
F.F	5.2	5.1	0.1	2.8	2.4	5.1	4.7	0	0	0
REF. NO.	IC2206									
MODE	11	12	13	14	15	16				
STOP	0	0	0	0	5.1	0				
REC	0	0	0	2.6	2.6	0				
F.F	0	0	0	2.6	5.1	0				
REF. NO.	IC2207									
MODE	1	2	3	4	5	6	7	8		
STOP	2.0	1.6	1.6	−5.0	0.3	0.3	4.0	5.1		
REC	2.1	1.6	1.6	−5.0	0.3	0.3	4.0	5.1		
F.F	2.4	1.6	1.6	−5.0	0.3	0.3	4.0	5.2		

CAPSTAN SERVO-2 SCHEMATIC DIAGRAM 8/11 (E3: Page CBA-5)

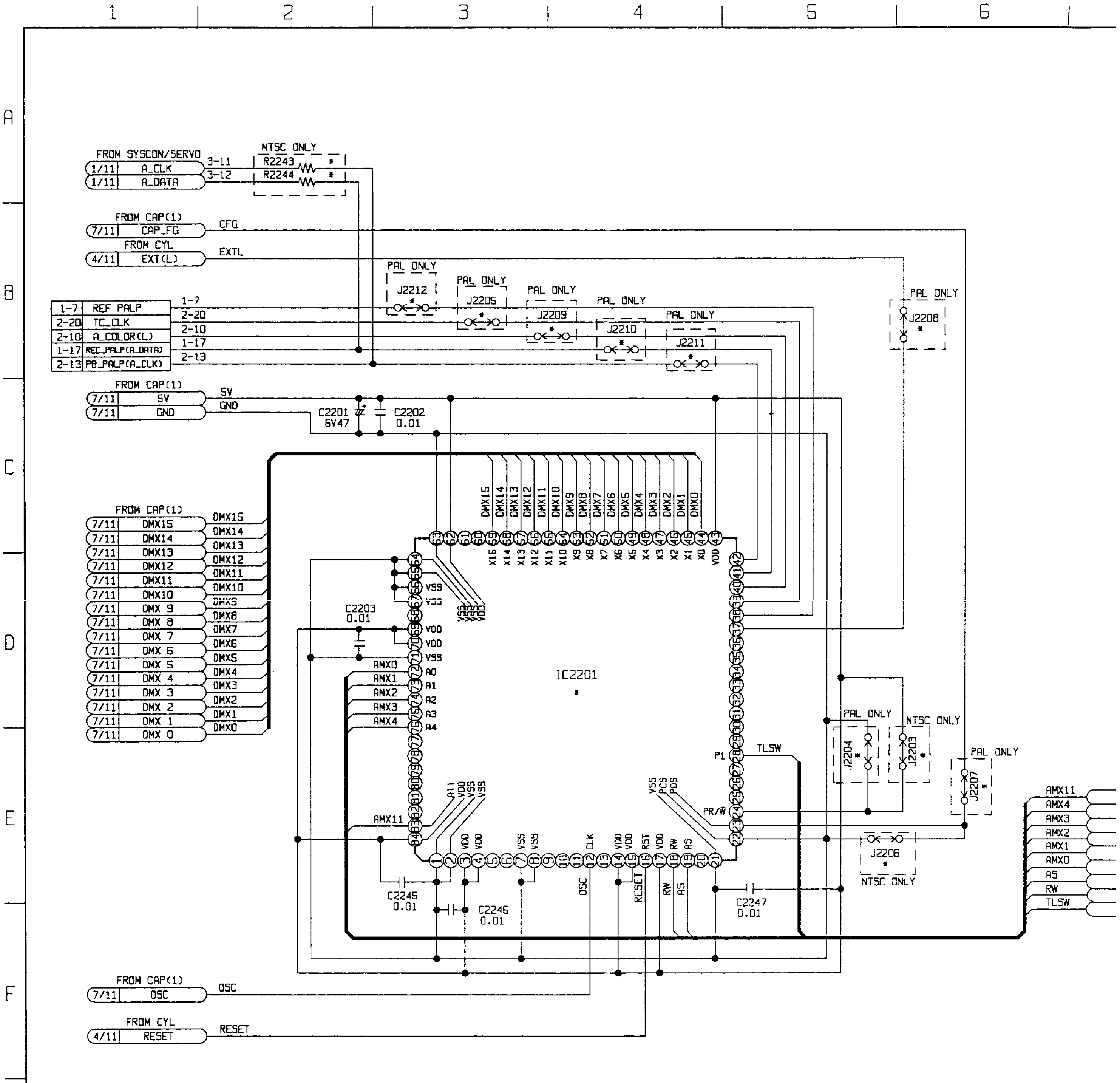

	AG-8700	AG-8600
IC2201	MN19041VMCX	MN19041VMCX
J2203	———	———
J2204	0	0
J2205	0	0
J2206	———	———
J2207	0	0
J2208	0	0
J2209	0	0
J2210	0	0
J2211	0	0
J2212	0	0
R2243	———	———
R2244	———	———

age CBA-5)

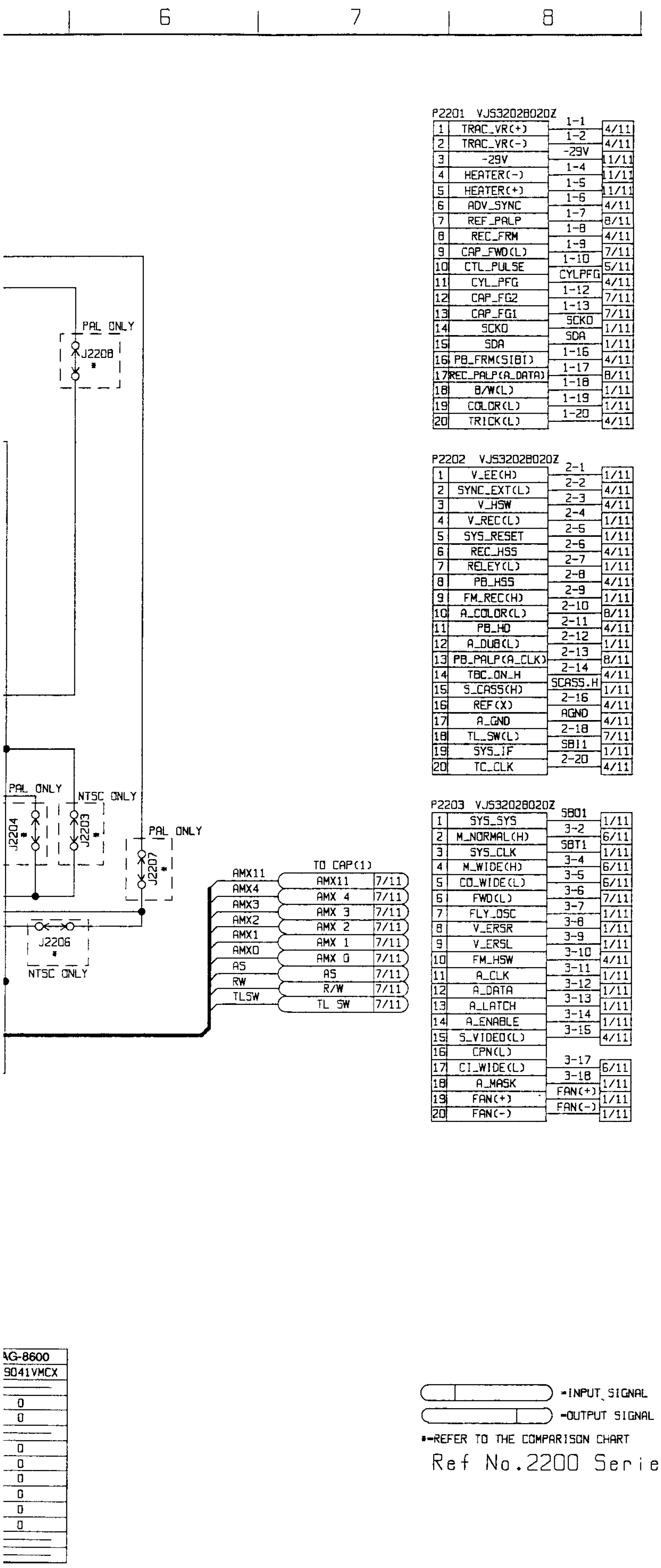

CAPSTAN SERVO-2 DC VOLTAGE CHART

REF. NO.	IC2201									
MODE	1	2	3	4	5	6	7	8	9	10
STOP	0	0	5.1	5.1	0	0	0	0	3.1	2.4
REC	0	0	5.1	5.1	0	0	0	0	3.1	2.4
F.F	0	0	5.2	5.2	0	0	0	0	3.1	2.2
REF. NO.	IC2201									
MODE	11	12	13	14	15	16	17	18	19	20
STOP	2.6	2.1	2.4	5.1	5.1	5.1	5.1	4.9	3.1	4.2
REC	2.6	2.1	2.4	5.1	5.1	5.1	5.1	4.9	2.8	4.2
F.F	2.7	2.1	2.4	5.2	5.2	5.2	5.2	5.0	3.2	4.3
REF. NO.	IC2201									
MODE	21	22	23	24	25	26	27	28	29	30
STOP	0	0	0	0	0	0	0.1	0.1	0.1	0.1
REC	0	0	2.5	0	5.1	0	0.1	0.1	0.1	0.1
F.F	0	0	5.1	0	0	0	0.2	0.2	0.2	0.2
REF. NO.	IC2201									
MODE	31	32	33	34	35	36	37	38	39	40
STOP	0.1	0.1	0.1	0.1	0.1	0.1	0.5	0.1	2.6	0.1
REC	0.1	0.1	0.1	0.1	0.1	0.1	5.0	0.1	2.6	0.1
F.F	0.1	0.1	0.1	0.1	0.1	0.1	5.1	0.2	2.6	0.1
REF. NO.	IC2201									
MODE	41	42	43	44	45	46	47	48	49	50
STOP	2.4	0	5.1	2.5	4.7	4.3	3.0	4.3	3.0	3.0
REC	2.5	0	5.1	3.0	4.3	3.6	4.0	3.6	3.7	3.7
F.F	2.4	0	5.2	3.7	2.9	2.9	2.9	2.9	2.9	2.9
REF. NO.	IC2201									
MODE	51	52	53	54	55	56	57	58	59	60
STOP	3.0	2.5	4.0	3.8	3.6	2.6	2.5	2.7	3.6	5.1
REC	3.5	2.9	4.0	3.0	3.7	3.5	3.7	4.2	4.2	5.1
F.F	2.9	3.1	3.1	3.3	3.7	2.2	4.0	3.7	3.9	5.2
REF. NO.	IC2201									
MODE	61	62	63	64	65	66	67	68	69	70
STOP	5.1	5.1	0	0	0	0	0	5.1	5.1	5.1
REC	5.1	5.1	0	0	0	0	0	5.1	5.1	5.1
F.F	5.2	5.2	0	0	0	0	0	5.2	5.2	5.2
REF. NO.	IC2201									
MODE	71	72	73	74	75	76	77	78	79	80
STOP	0	0.9	0.9	0.8	0.9	4.1	4.6	3.8	4.7	4.7
REC	0	2.4	2.8	3.7	2.1	1.9	1.2	4.3	4.6	4.6
F.F	0	0.3	0.4	1.0	0.8	4.5	4.7	3.9	4.7	4.7
REF. NO.	IC2201									
MODE	81	82	83	84						
STOP	0	0	0.5	5.1						
REC	0	0	0.5	5.1						
F.F	0	0	0.5	5.2						

MOTOR DRIVE-1 SCHEMATIC DIAGRAM 9/11 (E3: Page CBA-5)

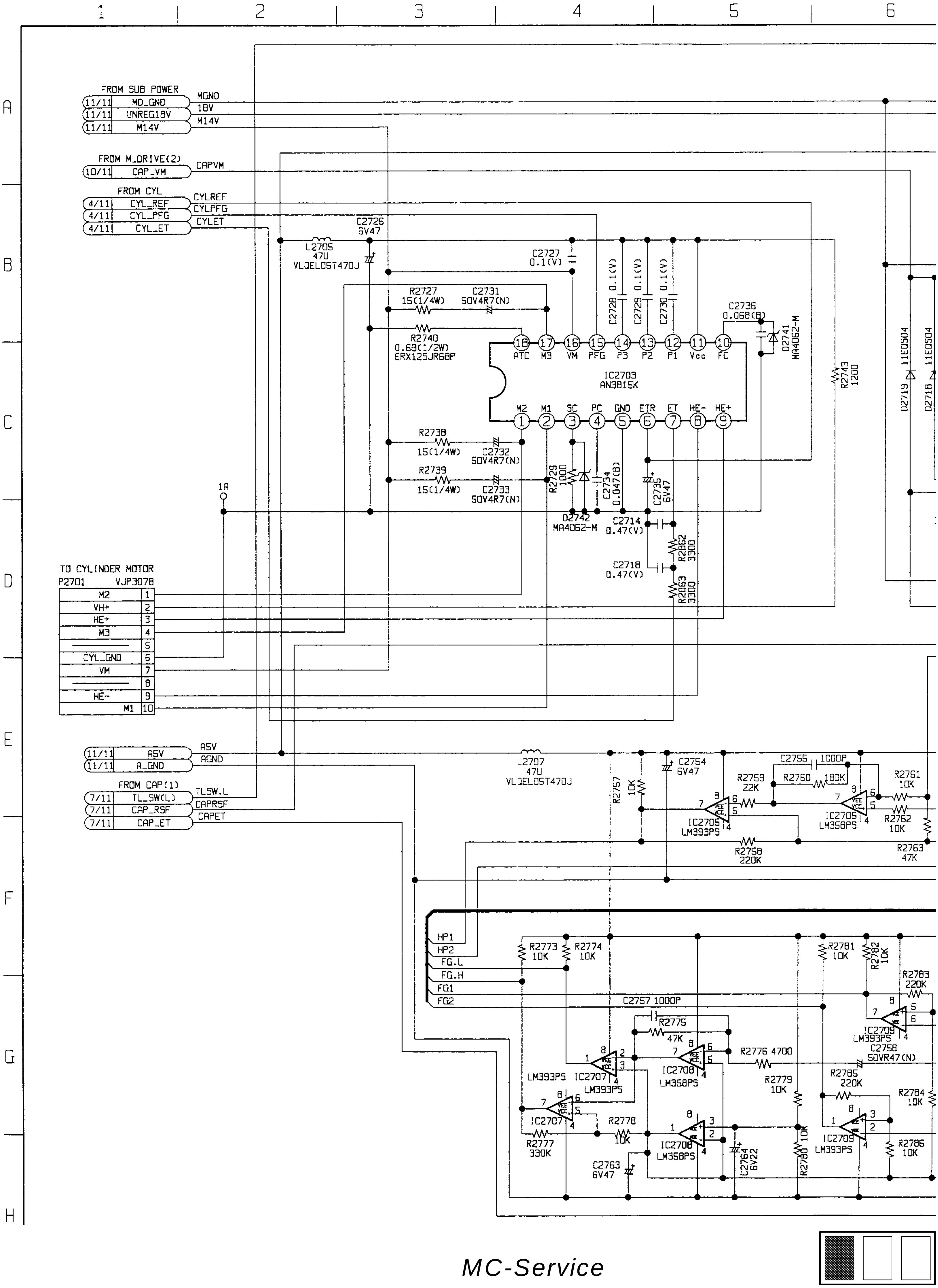

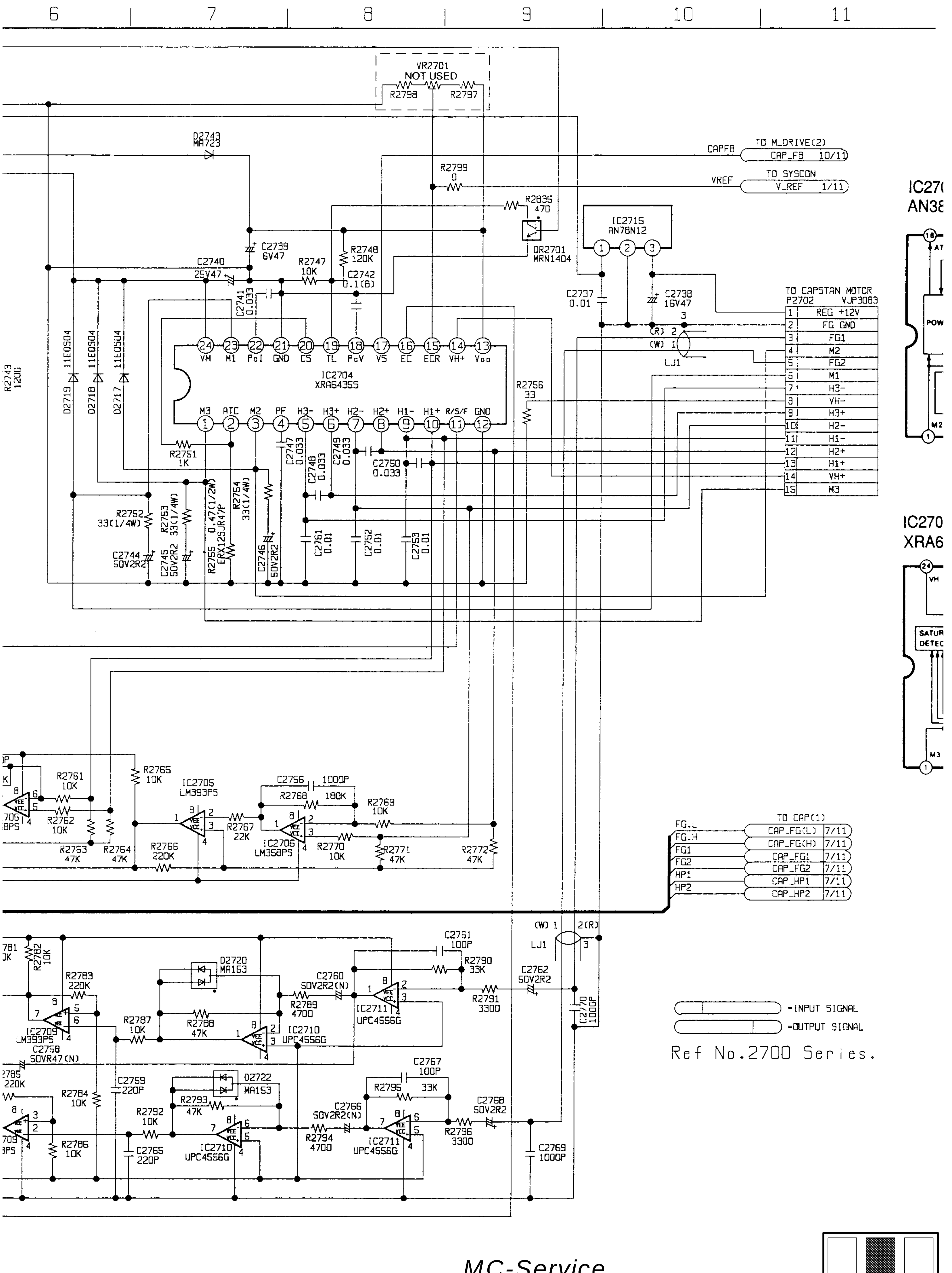
6 7 8 9 10 11
VR2701
NOT USED
R2798 R2797
D2743
MA723
CAPFB
TO M_DRIVE(2)
CAP_FB 10/11
R2799
0
VREF
TO SYSCON
V_REF 1/11
R2835
470
QR2701
MRN1404
IC2715
AN78N12
C2739
6V47
R2748
120K
C2740
25V47
R2747
10K
C2742
0.1(B)
C2741
0.033
C2737
0.01
C2738
16V47
TO CAPSTAN MOTOR
P2702 VJP3083
REG +12V
FG GND
FG1
M2
FG2
M1
H3-
VH-
H3+
H2-
H1-
H2+
H1+
VH+
M3
LJ1
VM M1 PoI GND CS TL PcV VS EC ECR VH+ Vcc
IC2704
XRA6435S
M3 ATC M2 PF H3- H3+ H2- H2+ H1- H1+ R/S/F GND
R2756
33
R2743
1200
D2719 11EQS04
D2718 11EQS04
D2717 11EQS04
R2751
1K
C2747
0.033
C2748
0.033
C2749
0.033
C2750
0.033
R2752
33(1/4W)
R2753
33(1/4W)
R2754
33(1/4W)
R2755
0.47(1/2W)
ERX125JR47P
C2744
50V2R2
C2745
50V2R2
C2746
50V2R2
C2751
0.01
C2752
0.01
C2753
0.01
IC270
AN38
IC270
XRA6
R2761
10K
R2762
10K
R2763
47K
R2764
47K
R2765
10K
IC2705
LM393PS
R2766
220K
R2767
22K
C2756 1000P
R2768 180K
R2769
10K
IC2706
LM358PS
R2770
10K
R2771
47K
R2772
47K
TO CAP(1)
FG.L CAP_FG(L) 7/11
FG.H CAP_FG(H) 7/11
FG1 CAP_FG1 7/11
FG2 CAP_FG2 7/11
HP1 CAP_HP1 7/11
HP2 CAP_HP2 7/11
R2782
10K
R2783
220K
D2720
MA153
C2761
100P
R2790
33K
C2760
50V2R2(N)
R2789
4700
C2762
50V2R2
R2791
3300
IC2711
UPC4556G
IC2709
LM393PS
R2787
10K
R2788
47K
IC2710
UPC4556G
C2758
50VR47(N)
C2770
1000P
=INPUT SIGNAL
=OUTPUT SIGNAL
Ref No.2700 Series.
C2759
220P
D2722
MA153
C2767
100P
R2795 33K
R2784
10K
R2793
47K
C2766
50V2R2(N)
C2768
50V2R2
R2792
10K
R2794
4700
R2796
3300
R2786
10K
C2765
220P
C2769
1000P

IC2703
AN3815K

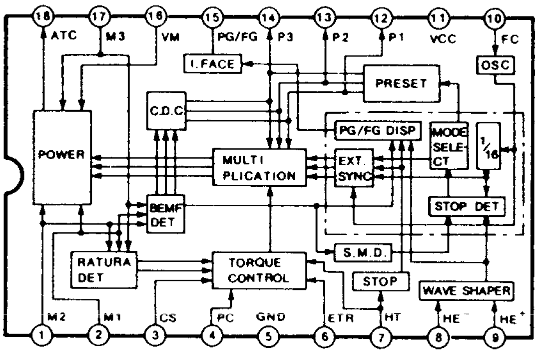

IC2704
XRA6435S

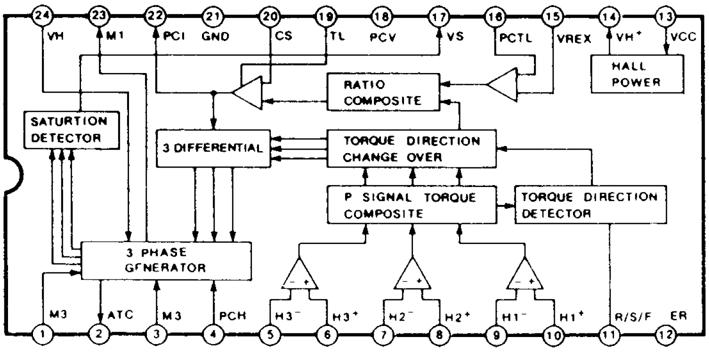

MOTOR DRIVE-1 DC VOLTAGE CHART

REF. NO.	IC2703									
MODE	1	2	3	4	5	6	7	8	9	10
STOP	14.7	14.7	0.4	1.1	0	2.5	2.4	0.6	0.5	2.6
REC	14.7	14.7	0.4	1.1	0	2.5	2.4	0.6	0.5	2.6
F.F	14.7	14.8	0.4	1.1	0	2.5	2.4	0.6	0.5	2.6
REF. NO.	IC2703									
MODE	11	12	13	14	15	16	17	18		
STOP	5.0	3.6	3.6	3.6	1.1	14.9	14.7	0.1		
REC	5.0	3.6	3.6	3.6	1.1	15.0	14.7	0.1		
F.F	5.0	3.6	3.6	3.6	1.1	14.9	14.7	0.1		
REF. NO.	IC2704									
MODE	1	2	3	4	5	6	7	8	9	10
STOP	2.0	0	2.0	1.4	1.9	1.9	1.9	1.9	1.9	1.9
REC	0.9	0	0.9	1.4	1.9	1.9	1.9	1.9	1.9	1.9
F.F	1.9	0	2.0	1.4	1.9	1.9	1.9	1.9	1.9	1.9
REF. NO.	IC2704									
MODE	11	12	13	14	15	16	17	18	19	20
STOP	5.1	0	4.7	3.4	2.4	2.4	2.7	0	0	0
REC	0	0	4.7	3.4	2.4	2.1	2.8	0.6	0.4	0.1
F.F	0	0	4.7	3.4	2.4	2.4	2.7	0	0	0
REF. NO.	IC2704									
MODE	21	22	23	24						
STOP	0	0	1.8	4.0						
REC	0	0.7	0.7	4.0						
F.F	0	0	1.8	4.0						
REF. NO.	IC2705									
MODE	1	2	3	4	5	6	7	8		
STOP	0	3.2	1.7	0	1.7	2.0	0	5.0		
REC	2.6	2.0	2.0	0	2.0	2.0	2.6	5.0		
F.F	5.0	0.6	2.2	0	1.7	3.5	0	5.0		
REF. NO.	IC2706									
MODE	1	2	3	4	5	6	7	8		
STOP	3.2	1.9	1.9	0	1.9	1.9	2.0	5.0		
REC	2.0	1.9	1.9	0	1.9	1.9	2.0	5.0		
F.F	0.6	1.9	1.9	0	1.9	1.9	3.5	5.0		
REF. NO.	IC2707									
MODE	1	2	3	4	5	6	7	8		
STOP	2.1	2.5	2.5	0	2.4	2.5	0	5.0		
REC	2.5	2.5	2.5	0	2.5	2.5	2.5	5.0		
F.F	2.1	2.5	2.5	0	2.5	2.5	0	5.0		
REF. NO.	IC2708									
MODE	1	2	3	4	5	6	7	8		
STOP	2.5	2.5	2.5	0	2.5	2.5	2.5	5.0		
REC	2.5	2.5	2.5	0	2.5	2.5	2.5	5.0		
F.F	2.5	2.5	2.5	0	2.5	2.5	2.5	5.0		
REF. NO.	IC2709									
MODE	1	2	3	4	5	6	7	8		
STOP	5.0	2.5	2.4	0	2.4	2.5	4.5	5.0		
REC	2.3	2.5	2.5	0	2.5	2.5	2.3	5.0		
F.F	0.1	2.5	2.4	0	2.4	2.5	4.5	5.0		
REF. NO.	IC2710									
MODE	1	2	3	4	5	6	7	8		
STOP	2.5	2.5	2.5	0	2.5	2.5	2.5	5.0		
REC	2.5	2.5	2.5	0	2.5	2.5	2.5	5.0		
F.F	2.5	2.5	2.5	0	2.5	2.5	2.5	5.0		
REF. NO.	IC2711									
MODE	1	2	3	4	5	6	7	8		
STOP	2.5	2.5	2.5	0	2.5	2.5	2.5	5.0		
REC	2.5	2.5	2.5	0	2.5	2.5	2.5	5.0		
F.F	2.5	2.5	2.5	0	2.5	2.5	2.5	5.0		
REF. NO.	IC2715									
MODE	I	G	O							
STOP	18.4	0	12.0							
REC	18.4	0	12.0							
F.F	18.3	0	12.0							
REF. NO.	QR2701									
MODE	E	C	B							
STOP	0	0	5.1							
REC	0	0.4	0							
F.F.	0	0	5.2							

MOTOR DRIVE-2 SCHEMATIC DIAGRAM 10/11 (E3: Page CBA-5)

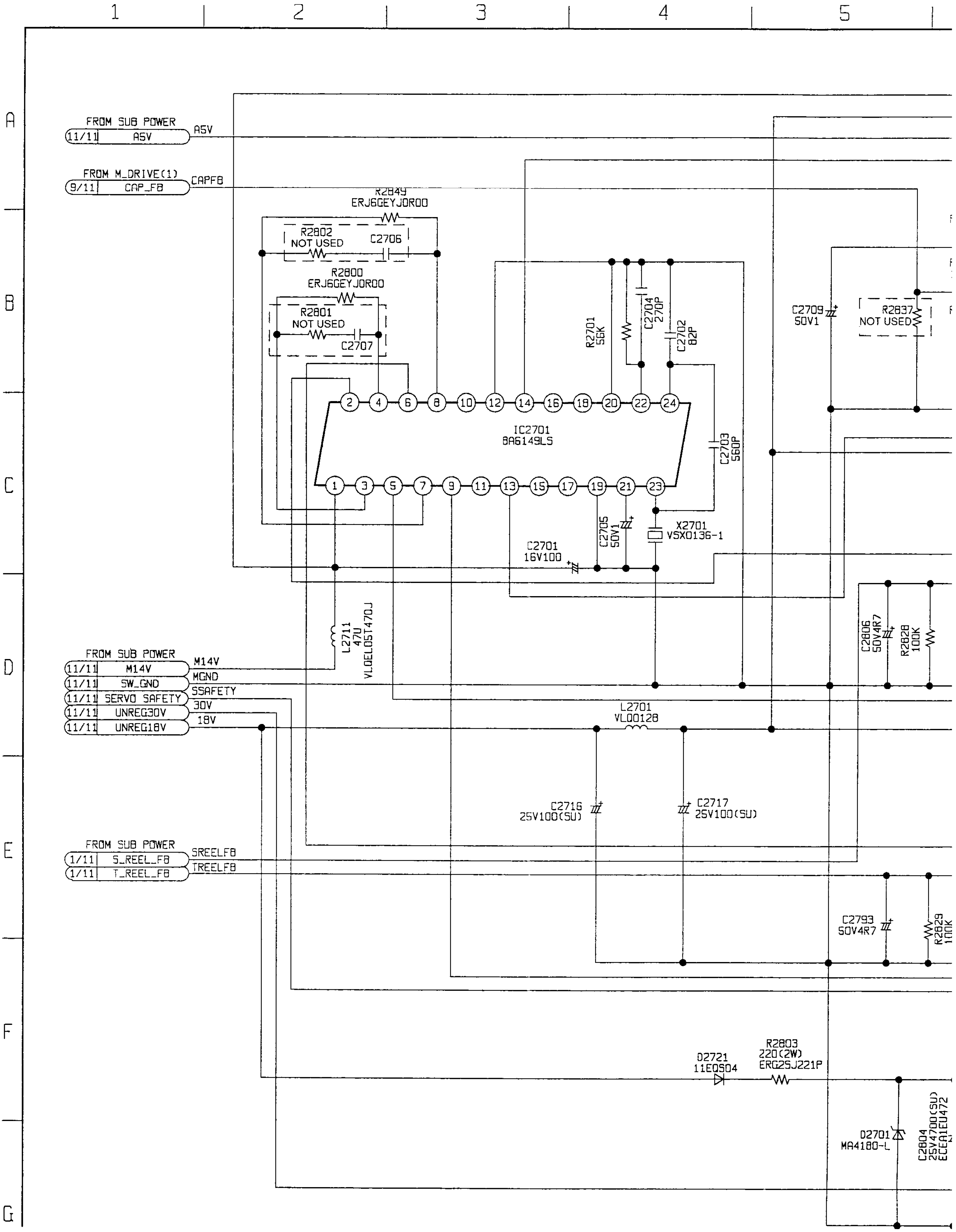

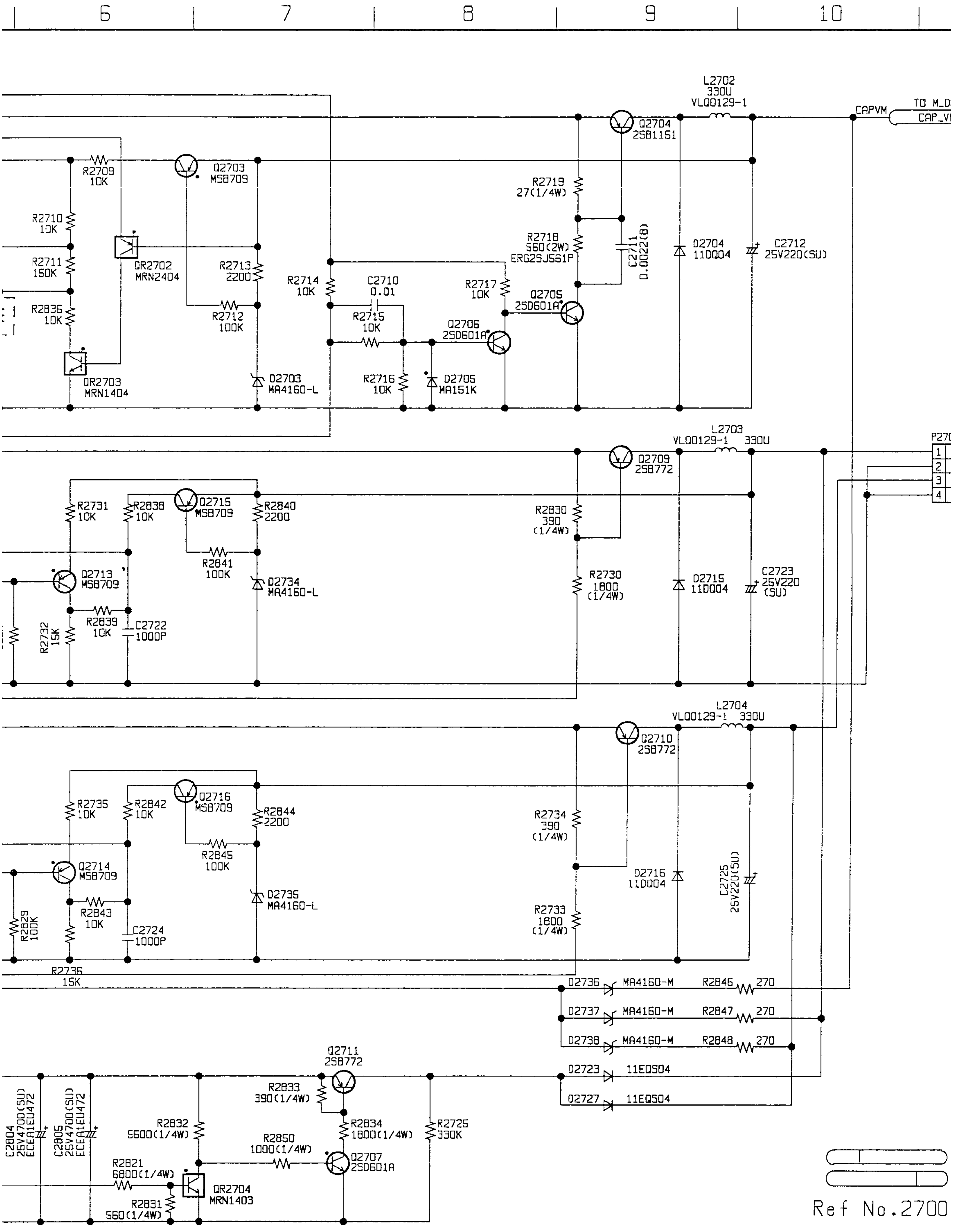
6
7
8
9
10
L2702
330U
VLQ0129-1
CAPVM
TO M_D
CAP_V
Q2704
2SB1151
R2709
10K
Q2703
MSB709
R2719
27(1/4W)
R2710
10K
R2718
560(2W)
ERG2SJ561P
C2711
0.0022(B)
D2704
11DQ04
C2712
25V220(SU)
R2711
150K
QR2702
MRN2404
R2713
2200
R2714
10K
C2710
0.01
R2717
10K
Q2705
2SD601A
R2836
10K
R2712
100K
R2715
10K
Q2706
2SD601A
QR2703
MRN1404
D2703
MA4160-L
R2716
10K
D2705
MA151K
L2703
VLQ0129-1
330U
Q2709
2SB772
R2731
10K
R2838
10K
Q2715
MSB709
R2840
2200
R2830
390
(1/4W)
R2841
100K
Q2713
MSB709
D2734
MA4160-L
R2730
1800
(1/4W)
D2715
11DQ04
C2723
25V220
(SU)
R2839
10K
C2722
1000P
R2732
15K
L2704
VLQ0129-1
330U
Q2710
2SB772
R2735
10K
R2842
10K
Q2716
MSB709
R2844
2200
R2734
390
(1/4W)
R2845
100K
Q2714
MSB709
D2716
11DQ04
C2725
25V220(SU)
D2735
MA4160-L
R2843
10K
R2829
100K
C2724
1000P
R2733
1800
(1/4W)
R2736
15K
D2736
MA4160-M
R2846
270
D2737
MA4160-M
R2847
270
D2738
MA4160-M
R2848
270
Q2711
2SB772
D2723
11EQS04
R2833
390(1/4W)
D2727
11EQS04
C2804
25V4700(SU)
ECEA1EU472
C2805
25V4700(SU)
ECEA1EU472
R2832
5600(1/4W)
R2834
1800(1/4W)
R2725
330K
R2850
1000(1/4W)
Q2707
2SD601A
R2821
6800(1/4W)
QR2704
MRN1403
R2831
560(1/4W)
Ref No.2700

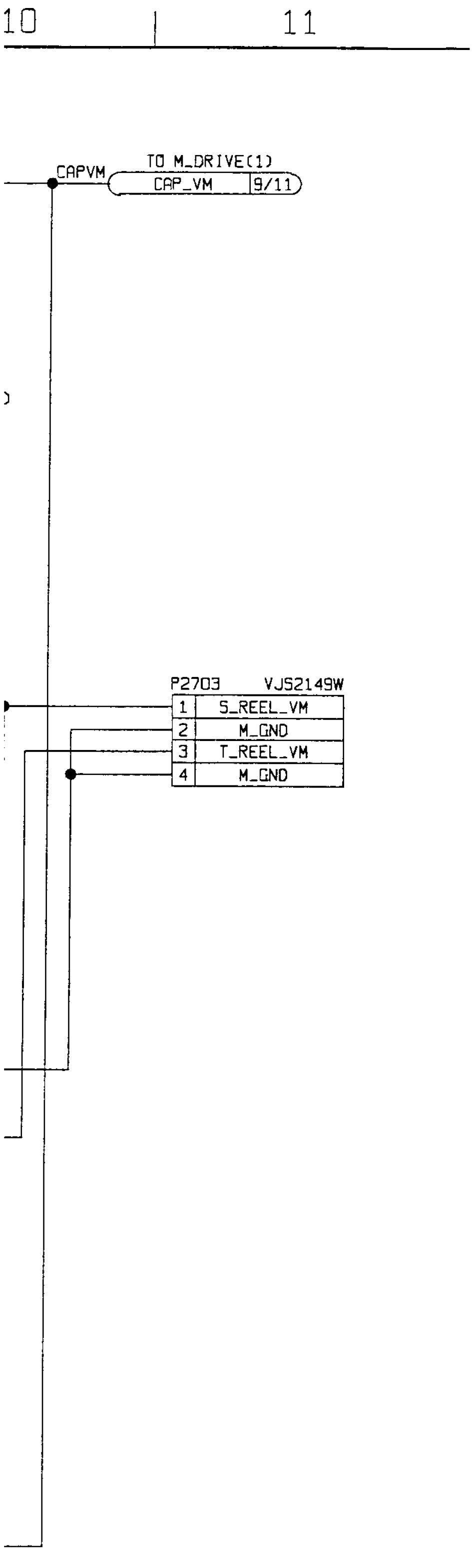

MOTOR DRIVE-2 DC VOLTAGE CHART

REF. NO.	IC2701									
MODE	1	2	3	4	5	6	7	8	9	10
STOP	14.9	2.9	3.3	3.0	18.9	2.9	3.2	3.2	18.0	0
REC	14.9	2.9	3.3	3.0	18.1	2.9	2.9	2.9	17.8	0.1
F.F	14.9	2.8	2.9	2.9	17.8	2.7	2.7	2.7	12.3	0.1
REF. NO.	IC2701									
MODE	11	12	13	14	15	16	17	18	19	20
STOP	0	0	6.1	2.7	0.5	0	0.5	0	0	0
REC	0.1	0	2.1	2.8	0.5	0.1	0.5	0.1	0	0
F.F	0.1	0	6.1	2.7	0.5	0.1	0.5	0.1	0	0
REF. NO.	IC2701									
MODE	21	22	23	24						
STOP	2.6	2.5	2.9	2.7						
REC	2.6	2.5	2.9	2.7						
F.F	2.6	2.5	2.9	2.8						
REF. NO.	Q2703			Q2704			Q2705			
MODE	E	C	B	E	C	B	E	C	B	
STOP	4.0	2.8	4.0	17.9	4.0	17.7	0	17.4	0	
REC	4.0	2.8	4.0	17.9	12.4	17.7	0	16.8	0.1	
F.F.	4.0	2.8	4.0	17.9	4.0	17.7	0	17.1	0	
REF. NO.	Q2706			Q2707			Q2709			
MODE	E	C	B	E	C	B	E	C	B	
STOP	0	0.2	0.7	0	17.0	0.1	17.8	5.5	17.3	
REC	0	0.1	0.5	0	17.0	0.1	17.9	11.8	17.7	
F.F.	0	0	0.7	0	16.7	0.1	17.8	17.0	17.3	
REF. NO.	Q2710			Q2711			Q2713			
MODE	E	C	B	E	C	B	E	C	B	
STOP	17.8	5.6	17.4	17.5	1.2	17.5	2.9	2.9	2.4	
REC	17.9	11.9	17.7	17.0	2.9	17.0	3.0	3.0	2.4	
F.F.	17.8	7.1	17.4	17.0	2.0	17.0	3.6	2.8	3.3	
REF. NO.	Q2714			Q2715			Q2716			
MODE	E	C	B	E	C	B	E	C	B	
STOP	2.9	2.9	2.4	5.2	2.9	4.9	5.1	2.9	4.9	
REC	3.7	2.9	3.1	4.9	2.9	4.8	4.9	2.8	4.8	
F.F.	5.3	2.7	4.5	15.3	2.9	15.9	13.0	2.7	11.0	
REF. NO.	QR2702			QR2703			QR2704			
MODE	E	C	B	E	C	B	E	C	B	
STOP	5.0	1.4	4.0	0	1.6	1.2	0	0.1	2.4	
REC	5.0	1.4	4.0	0	1.6	1.4	0	0.1	2.5	
F.F.	5.0	1.2	4.0	0	1.8	1.2	0	0.1	2.4	

IC2701
BA6149LS

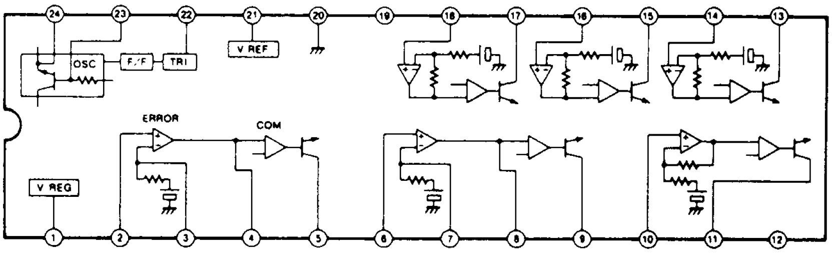

=INPUT SIGNAL
=OUTPUT SIGNAL

ef No.2700 Series.

SUB POWER SCHEMATIC DIAGRAM 11/11 (E3: Page CBA-5)

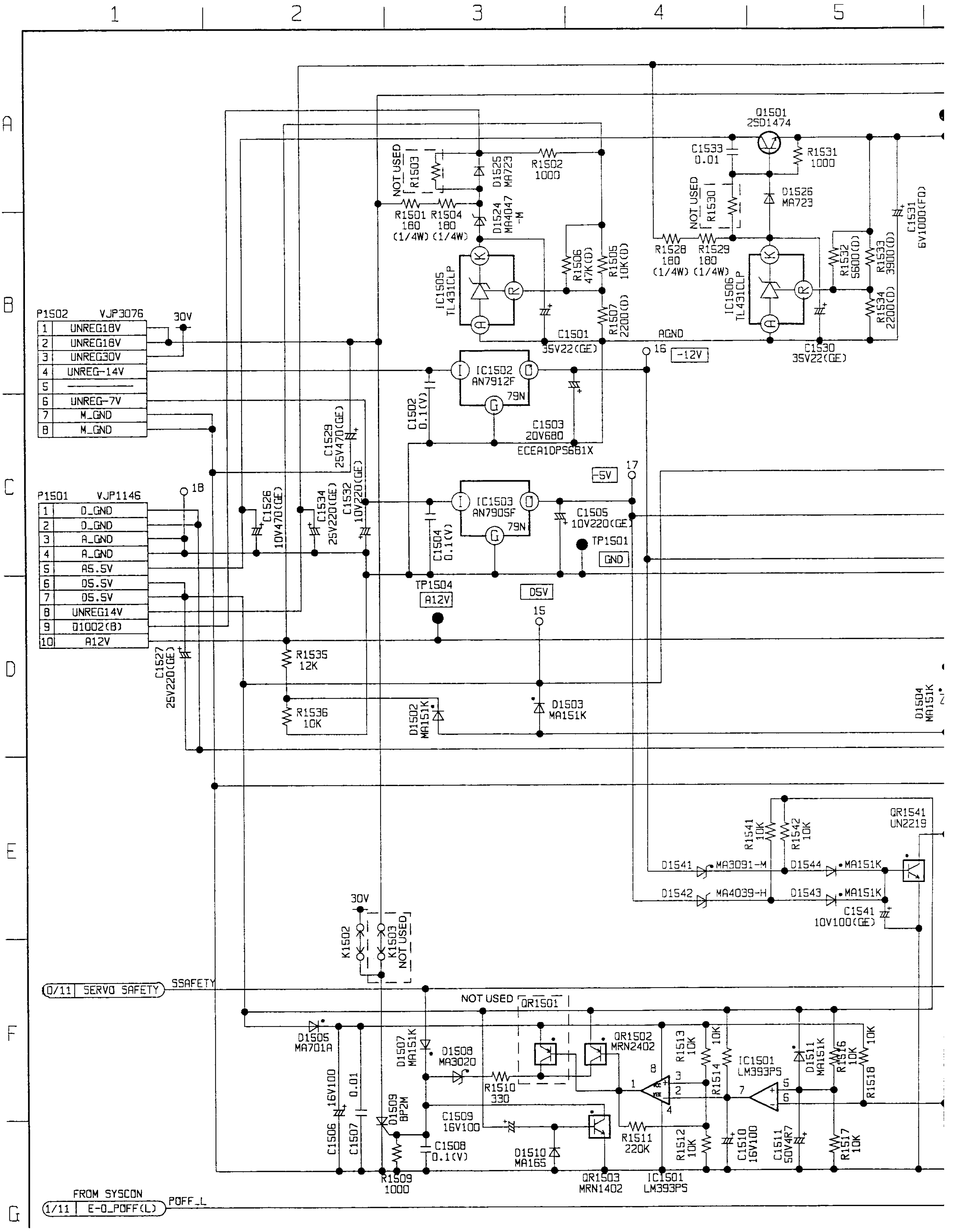

MC-Service

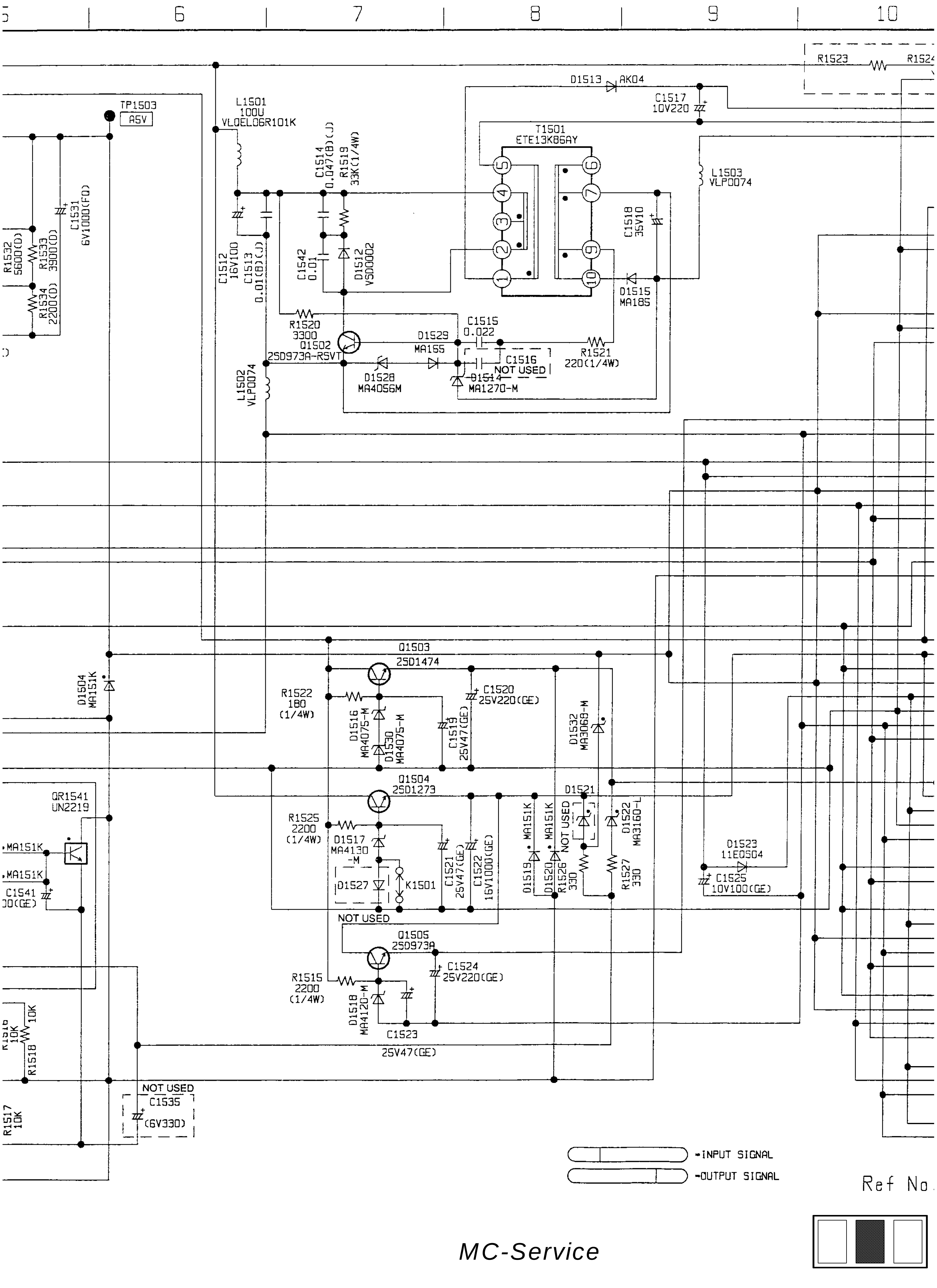

6
7
8
9
10
R1523
TP1503
A5V
L1501
100U
VLQEL06R101K
D1513 AK04
C1517
10V220
T1501
ETE13K86AY
L1503
VLP0074
C1514
0.047(B)(J)
R1519
33K(1/4W)
C1531
6V1000(FD)
R1532
5600(D)
R1533
3900(D)
R1534
2200(D)
C1512
16V100
C1513
0.01(B)(J)
C1542
0.01
D1512
VSD0002
C1518
35V10
D1515
MA185
R1520
3300
Q1502
2SD973A-RSVT
D1529
MA165
C1515
0.022
C1516
NOT USED
R1521
220(1/4W)
L1502
VLP0074
D1528
MA4056M
D1514
MA1270-M
Q1503
2SD1474
R1522
180
(1/4W)
C1520
25V220(GE)
D1504
MA151K
D1516
MA4075-M
D1530
MA4075-M
C1519
25V47(GE)
D1532
MA3068-M
Q1504
2SD1273
D1521
QR1541
UN2219
R1525
2200
(1/4W)
D1517
MA4130
-M
D1527
K1501
C1521
25V47(GE)
C1522
16V1000(GE)
D1519
MA151K
D1520
MA151K
NOT USED
R1526
330
R1527
330
D1522
MA3160-L
D1523
11EQS04
C1525
10V100(GE)
MA151K
MA151K
C1541
NOT USED
Q1505
2SD973A
C1524
25V220(GE)
R1515
2200
(1/4W)
D1518
MA4120-M
C1523
25V47(GE)
R1516
10K
R1518
10K
NOT USED
C1535
(6V330)
R1517
10K
=INPUT SIGNAL
=OUTPUT SIGNAL
Ref No.

MC-Service

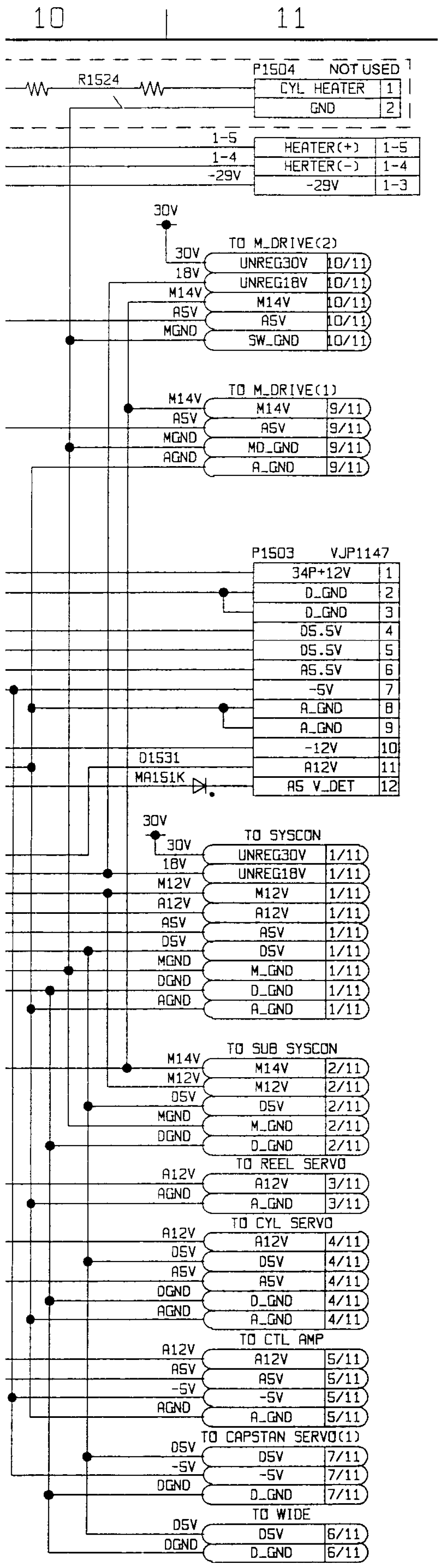

Ref No.1500 Serise.

SUB POWER DC VOLTAGE CHART

REF. NO.	IC1501									
MODE	1	2	3	4	5	6	7	8		
STOP	5.3	0.1	2.7	0	2.7	5.3	0.1	5.3		
REC	5.2	0.1	2.7	0	2.7	5.3	0.1	5.3		
F.F	5.3	0.1	2.7	0	2.7	5.3	0.1	5.3		
REF. NO.	IC1502					IC1503				
MODE	G	I	O			G	I	O		
STOP	0	−13.7	−12.2			0	−7.0	−5.0		
REC	0	−13.7	−12.2			0	−7.0	−5.0		
F.F	0	−13.7	−12.2			0	−6.9	−5.0		
REF. NO.	IC1505					IC1506				
MODE	K	A	R			K	A	R		
STOP	7.7	0	2.5			5.9	0	2.5		
REC	7.7	0	2.5			5.9	0	2.5		
F.F	7.7	0	2.5			5.9	0	2.5		
REF. NO.	Q1501			Q1502			Q1503			
MODE	E	C	B	E	C	B	E	C	B	
STOP	5.1	5.4	5.7	0	1.6	−3.0	14.8	18.3	15.4	
REC	5.1	5.4	5.7	0	1.5	−3.0	15.0	18.5	15.5	
F.F.	5.1	5.4	5.7	0	1.5	−2.8	15.0	18.1	15.4	
REF. NO.	Q1504			Q1505						
MODE	E	C	B	E	C	B				
STOP	13.0	13.6	13.5	12.0	13.0	12.3				
REC	13.0	13.4	13.5	12.0	12.9	12.3				
F.F.	13.0	13.5	13.5	12.0	12.9	12.3				
REF. NO.	QR1502			QR1503			QR1541			
MODE	E	C	B	E	C	B	E	C	B	
STOP	5.5	0	5.2	0	0	0	0	5.3	0	
REC	5.5	0	5.2	0	0	0	0	5.3	0	
F.F.	5.5	0	5.2	0	0	0	0	5.3	0	

VIDEO I/O-1 SCHEMATIC DIAGRAM 1/7 (E5: Page CBA-8)

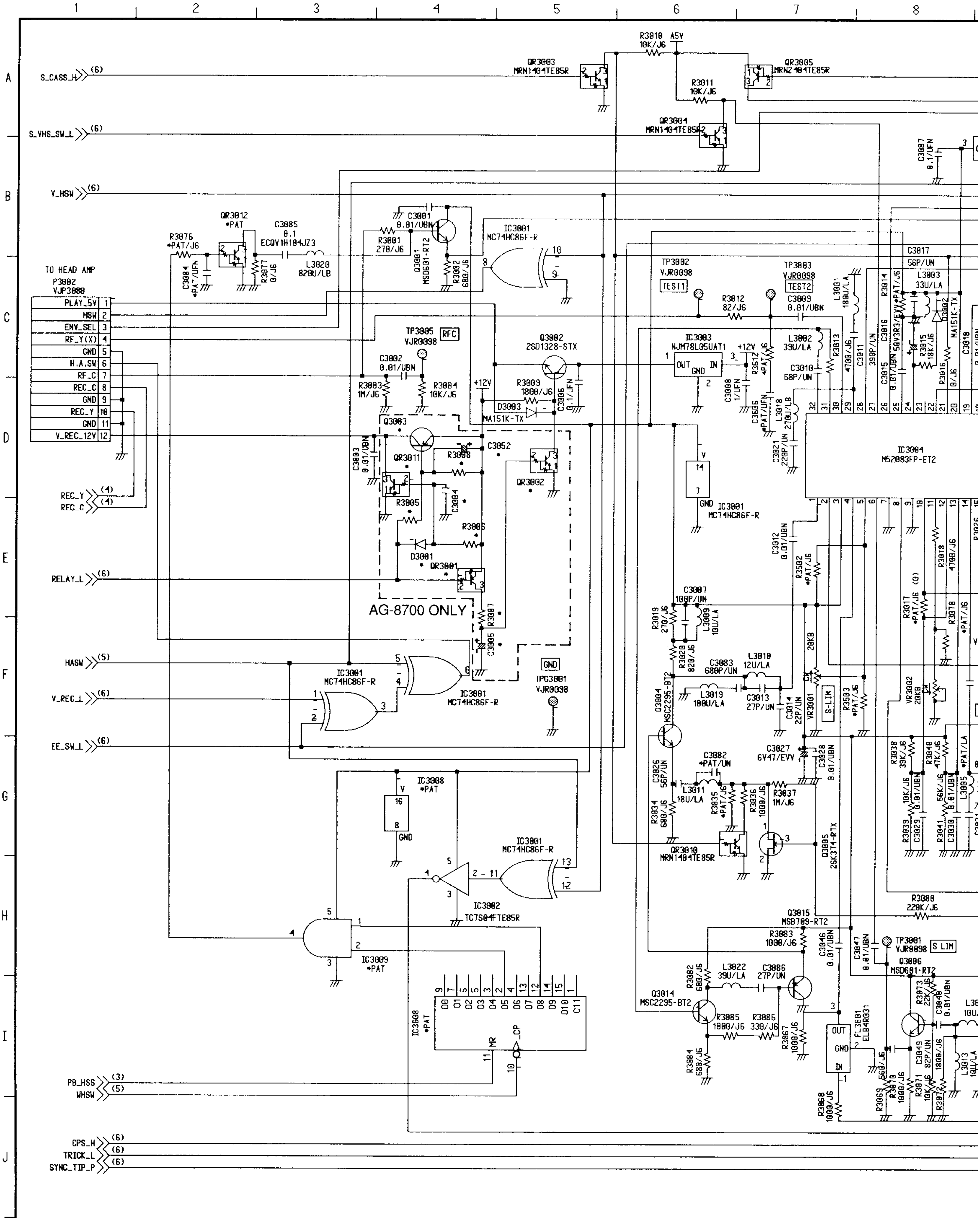

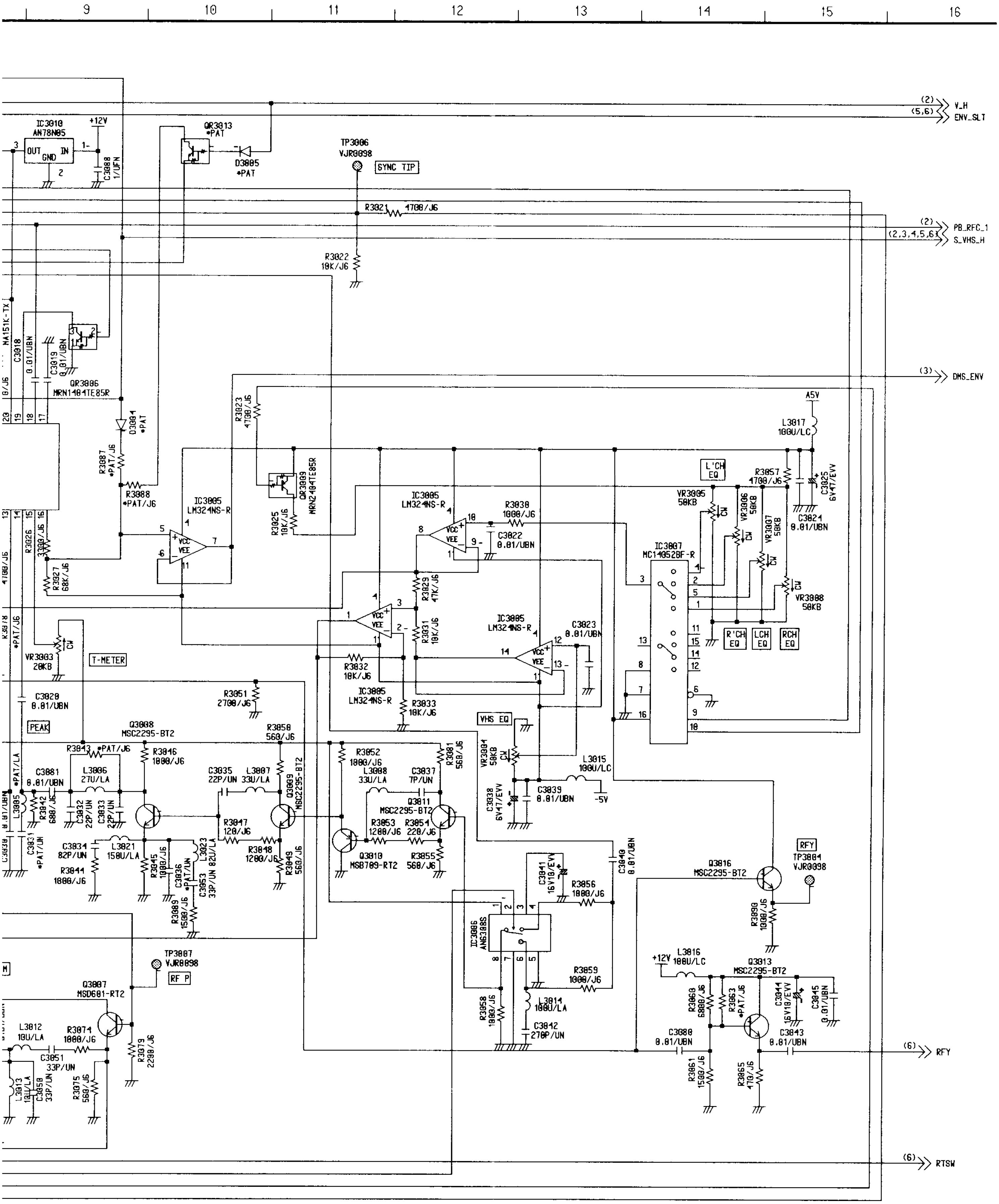

*PAT=PATTERN ONLY
*=REFER TO THE COMPARISON CHART
Ref No.3000 Series.

(2) V_H
(5,6) ENV_SLT

(2) PB_RFC_1
(2,3,4,5,6) S_VHS_H

(3) DMS_ENV

VIDEO I/O-1 DC VOLTAGE CHART

REF. NO.																				
REF. NO.	IC3001																			
MODE	1	2	3	4	5	6	7	8	9	10	11	12	13	14						
STOP	3.7	0	5.0	5.0	0	5.0	0	2.5	0	2.5	2.5	2.5	0	5.0						
REC	0.1	0	0	0	0	0	0	2.5	0	2.5	2.5	2.5	0	5.0						
REF. NO.	IC3002										IC3003									
MODE	1	2	3	4	5						I	G	O							
STOP	0	2.5	0	2.5	5.0						11.5	0	5.1							
REC	0	2.5	0	2.5	5.0						11.5	0	5.1							
REF. NO.	IC3004																			
MODE	1	2	3	4	5	6	7	8	9	10	11	12	13	14	15	16	17	18	19	20
STOP	3.7	2.2	5.0	3.1	2.4	2.8	0	2.2	0	1.4	2.9	1.1	2.7	3.9	2.2	0.6	3.3	3.0	2.5	5.0
REC	3.7	2.2	5.0	3.1	2.4	2.8	0	2.2	0	1.4	2.9	1.1	2.7	3.9	2.2	0.3	3.2	3.0	2.5	5.0
REF. NO.	IC3004																			
MODE	21	22	23	24	25	26	27	28	29	30	31	32								
STOP	0	4.9	0.2	2.8	3.9	0.2	4.9	2.7	2.8	3.6	0	5.0								
REC	0.1	4.9	0.2	2.7	3.9	0.2	4.9	2.7	2.8	3.6	0	5.0								
REF. NO.	IC3005																			
MODE	1	2	3	4	5	6	7	8	9	10	11	12	13	14						
STOP	−0.9	−0.4	−0.4	4.9	0.2	0.2	0.2	1.4	1.4	1.4	−5.0	−0.8	−0.8	−0.8						
REC	−0.9	−0.4	−0.4	4.9	0	0	0	1.4	1.4	1.4	−5.0	−0.8	−0.8	−0.8						
REF. NO.	IC3006																			
MODE	1	2	3	4	5	6	7	8												
STOP	5.0	4.2	2.5	2.6	0	2.6	0	2.5												
REC	5.0	4.2	2.5	2.6	0	2.6	0	2.5												
REF. NO.	IC3007																			
MODE	1	2	3	4	5	6	7	8	9	10	11	12	13	14	15	16				
STOP	1.4	1.0	1.4	1.3	1.4	0	0	0	0	2.5	0.2	0.2	0.2	0.2	0.5	4.9				
REC	1.4	1.0	1.4	1.3	1.4	0	0	0	0	2.5	0	0	0	0	0	4.9				
REF. NO.	IC3010																			
MODE	I	G	O																	
STOP	11.5	0	5.0																	
REC	11.5	0	5.0																	
REF. NO.	Q3001			Q3002			Q3003			Q3004			Q3005			Q3006				
MODE	E	C	B	E	C	B	E	C	B	E	C	B	S	G	D	E	C	B		
STOP	1.6	5.0	2.3	5.1	5.1	5.6	11.5	0	11.5	0.1	5.0	0.7	0	−0.7	0	0.9	5.0	1.5		
REC	0	5.0	0	0.3	5.1	0	11.5	11.3	10.7	0.1	5.0	0.7	0	−0.7	0	0.9	5.0	1.5		
REF. NO.	Q3007			Q3008			Q3009			Q3010			Q3011			Q3013				
MODE	E	C	B	E	C	B	E	C	B	E	C	B	E	C	B	E	C	B		
STOP	1.6	5.0	2.3	1.0	4.0	1.7	1.7	3.3	2.4	2.4	0	1.8	1.8	3.2	2.5	1.5	11.5	2.1		
REC	1.6	5.0	2.3	1.0	4.0	1.7	1.7	3.3	2.4	2.4	0	1.8	1.8	3.2	2.5	1.4	11.5	2.1		
REF. NO.	Q3014			Q3015																
MODE	E	C	B	E	C	B														
STOP	0	5.0	0	0.7	0	0														
REC	0	5.0	0	0.7	0	0														
REF. NO.	QR3001			QR3002			QR3003			QR3004			QR3005			QR3006				
MODE	E	C	B	E	C	B	E	C	B	E	C	B	E	C	B	E	C	B		
STOP	11.5	0	11.5	0	5.8	0	0	0.1	3.0	0	4.9	0	4.9	0	4.9	0	2.5	0		
REC	11.5	11.5	0	0	0	7.7	0	0.1	3.0	0	4.9	0	4.9	0	4.9	0	2.5	0		
REF. NO.	QR3009			QR3010			QR3011													
MODE	E	C	B	E	C	B	E	C	B											
STOP	4.9	4.9	3.5	0	0	0.1	0	0	7.8											
REC	4.9	4.9	3.5	0	0	0.1	0	11.3	0.5											

IC3004
M52083FP

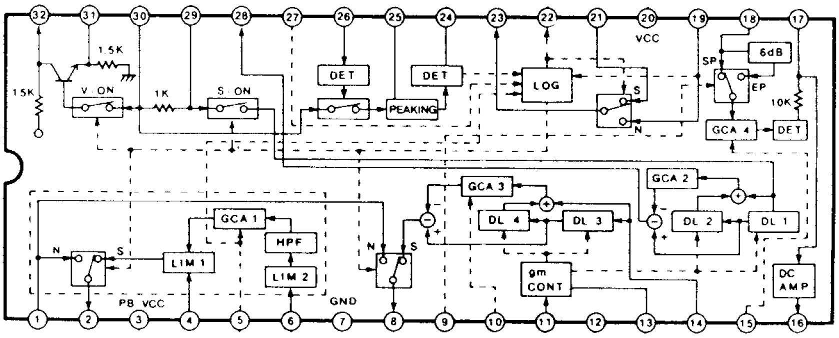

IC3007
MC14052BF

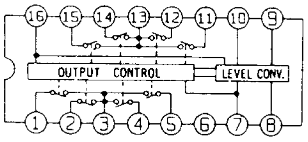

(6) RFY

(6) RTSW

VIDEO I/O-3 SCHEMATIC DIAGRAM 3/7 (E5: Page CBA-8)

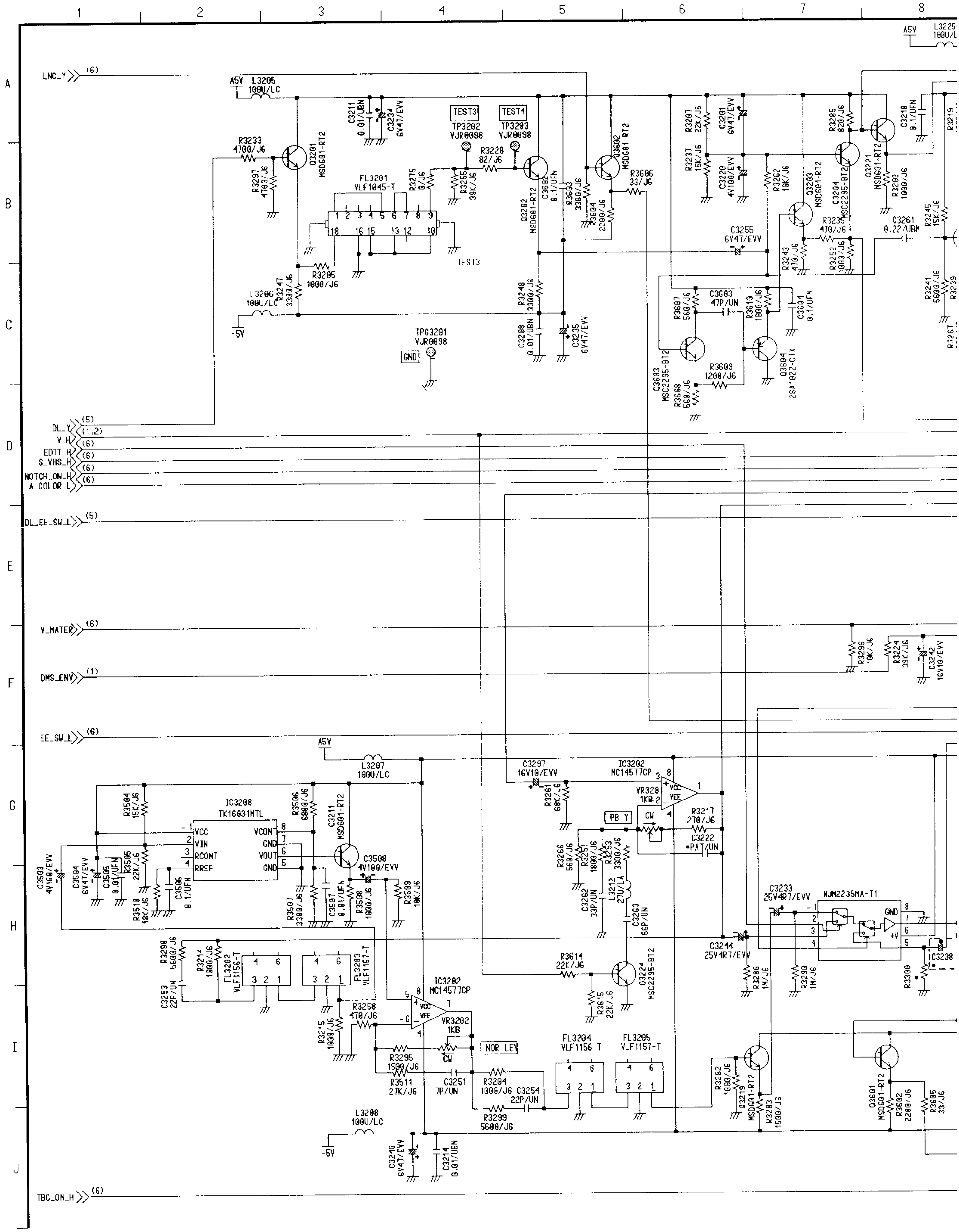

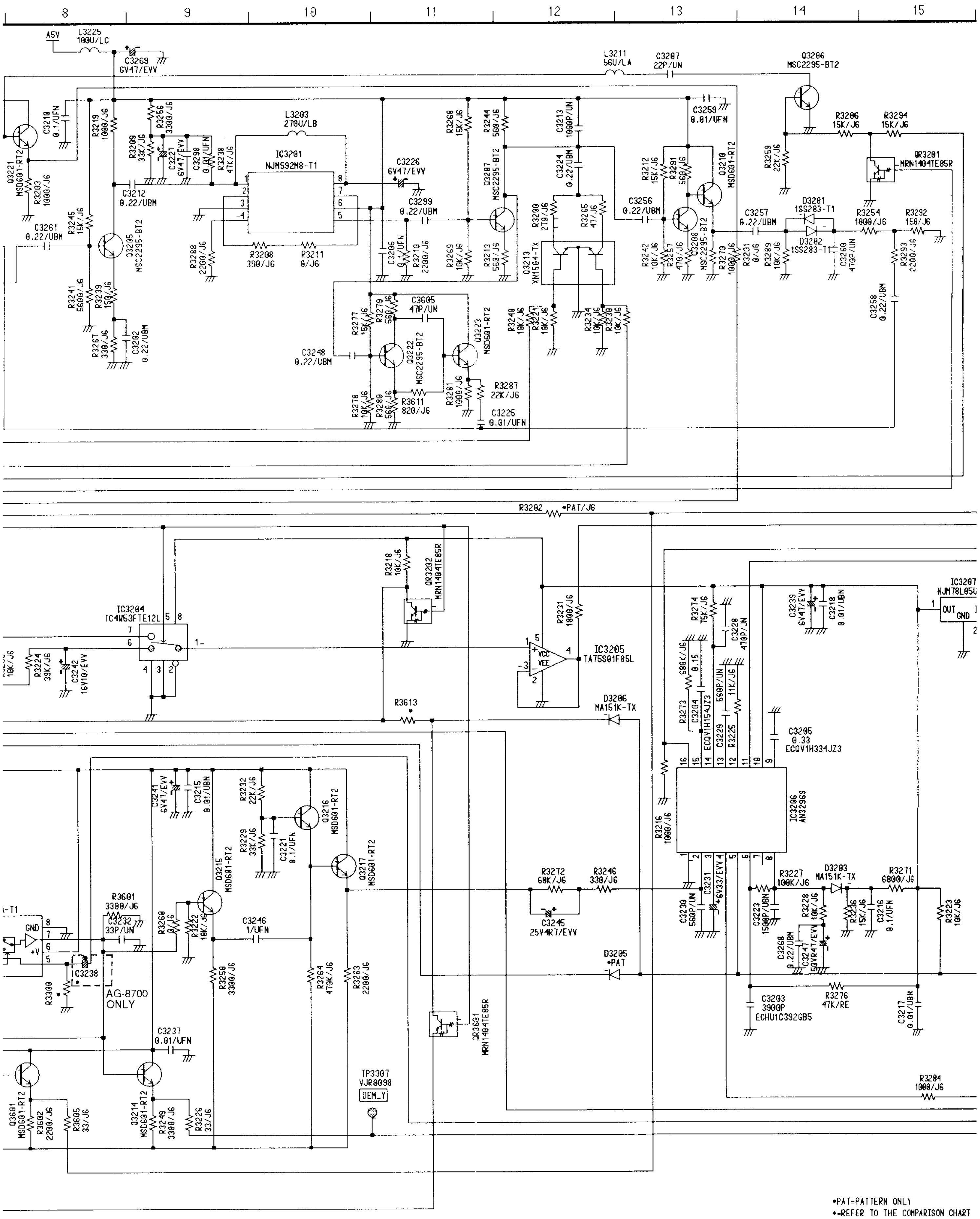

*PAT=PATTERN ONLY
*=REFER TO THE COMPARISON CHART

Ref No 3200 Seri

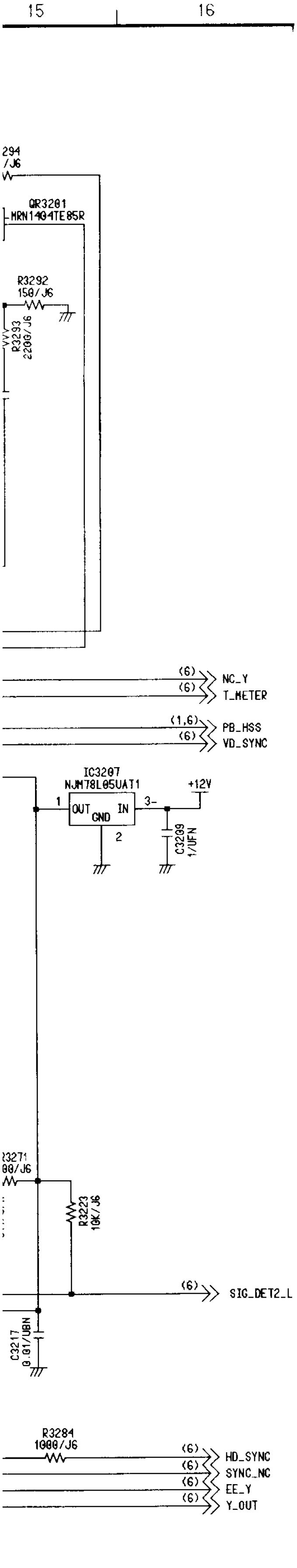

ONLY
IE COMPARISON CHART
3200 Series.

VIDEO I/O-3 DC VOLTAGE CHART

REF. NO.	IC3201									
MODE	1	2	3	4	5	6	7	8		
STOP	3.4	2.7	0	3.3	3.3	4.7	2.7	3.4		
REC	3.4	2.7	0	3.3	3.3	4.7	2.7	3.4		
REF. NO.	IC3202									
MODE	1	2	3	4	5	6	7	8		
STOP	0	0	0	−4.8	0	0	0.1	4.7		
REC	0	0	0	−4.8	0	0	0.1	4.7		
REF. NO.	IC3203									
MODE	1	2	3	4	5	6	7	8		
STOP	1.9	4.9	1.9	3.5	2.3	4.7	1.5	0		
REC	1.9	4.9	1.9	3.5	2.3	4.7	1.5	0		
REF. NO.	IC3205									
MODE	1	2	3	4	5					
STOP	0.9	0	0	0	5.0					
REC	0.9	0	0	0	5.0					
REF. NO.	IC3206									
MODE	1	2	3	4	5	6	7	8	9	10
STOP	0	3.3	4.1	3.4	0.2	2.9	0	3.0	2.2	5.0
REC	0	3.3	4.1	3.5	0.2	2.9	0	3.0	2.2	5.0
REF. NO.	IC3206									
MODE	11	12	13	14	15	16				
STOP	4.8	0.7	0.1	1.2	3.8	3.5				
REC	4.8	0.7	0.1	1.2	3.8	3.6				
REF. NO.	Q3201			Q3202			Q3203			
MODE	E	C	B	E	C	B	E	C	B	
STOP	1.3	4.8	1.9	0.7	4.9	1.3	1.0	4.9	1.7	
REC	1.3	4.8	1.9	0.7	4.9	1.3	1.0	4.9	1.7	
REF. NO.	Q3204			Q3205			Q3206			
MODE	E	C	B	E	C	B	E	C	B	
STOP	1.0	4.0	1.8	0.5	3.6	1.3	0	0	0	
REC	1.0	4.0	1.8	0.5	3.6	1.3	0	0	0	
REF. NO.	Q3207			Q3208			Q3210			
MODE	E	C	B	E	C	B	E	C	B	
STOP	1.0	3.7	1.8	1.0	3.5	1.7	2.9	4.7	3.5	
REC	1.0	3.7	1.8	1.0	3.5	1.7	2.9	4.7	3.5	
REF. NO.	Q3213						Q3214			
MODE	1	2	3	4	5		E	C	B	
STOP	0	0	0.7	0	0.7		0.9	4.7	1.5	
REC	0	0	0.7	0	0.7		0.9	4.7	1.5	
REF. NO.	Q3216			Q3217			Q3219			
MODE	E	C	B	E	C	B	E	C	B	
STOP	2.7	4.7	2.8	2.1	4.7	2.7	−0.6	4.7	0	
REC	2.7	4.7	2.8	2.1	4.7	2.7	−0.6	4.7	0	
REF. NO.	Q3221			Q3222			Q3223			
MODE	E	C	B	E	C	B	E	C	B	
STOP	3.3	4.8	4.0	1.0	3.5	1.7	0.4	4.7	1.0	
REC	3.3	4.8	4.0	1.0	3.5	1.7	0.4	4.7	1.0	
REF. NO.	QR3201			QR3202						
MODE	E	C	B	E	C	B				
STOP	0	0	0.1	0	3.5	0.1				
REC	0	0	0.1	0	3.5	0.1				

IC3201
NJM592MB

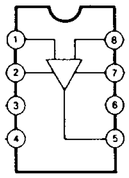

IC3206
AN3296S

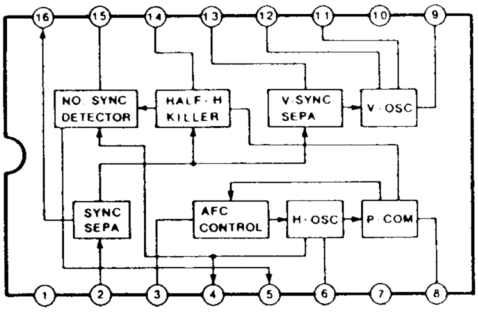

IC3208
TK16031MTL

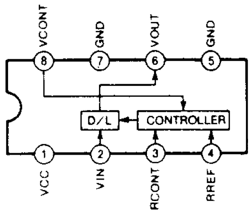

VIDEO I/O-2 SCHEMATIC DIAGRAM 2/7 (E5: Page CBA-8)

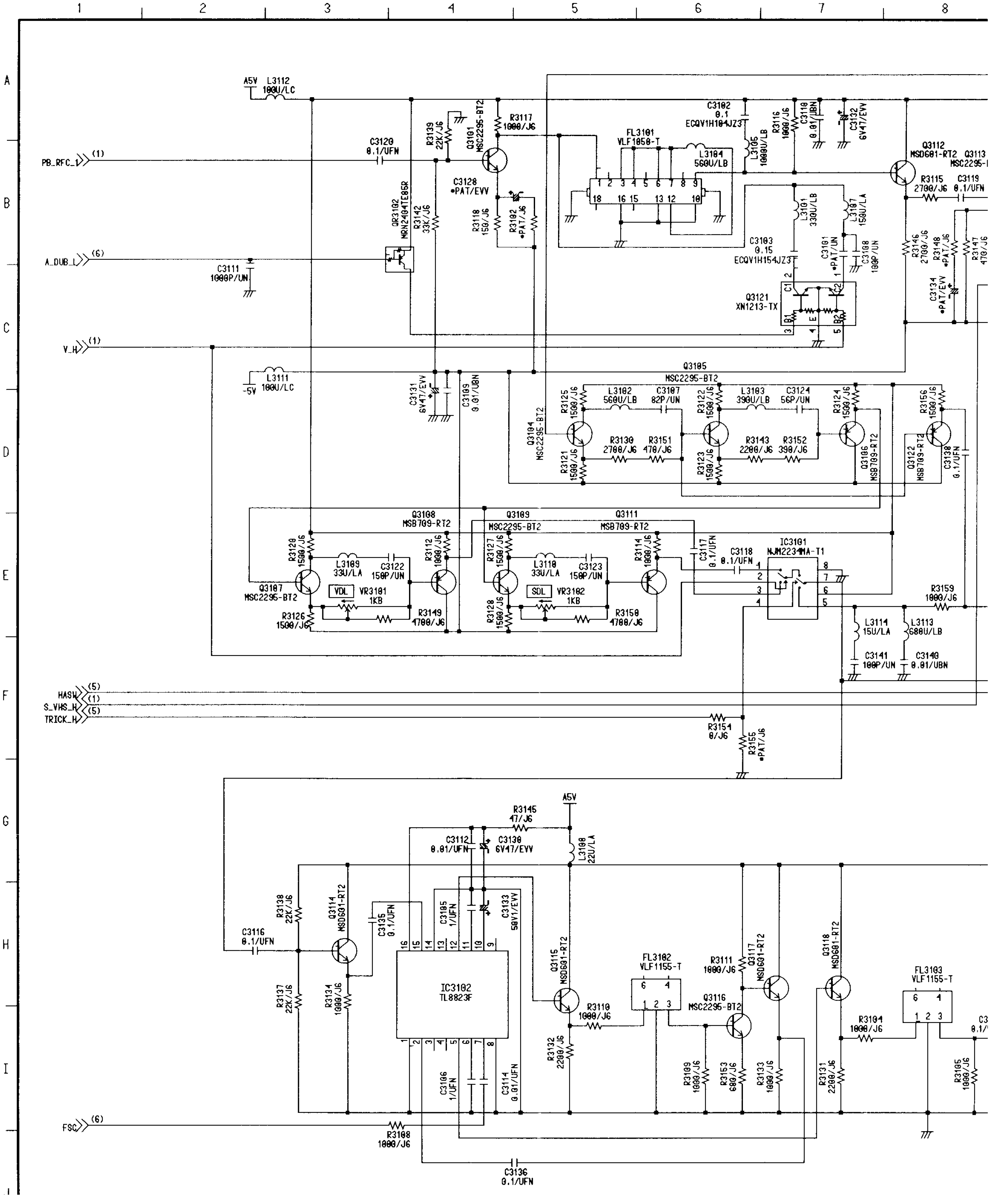

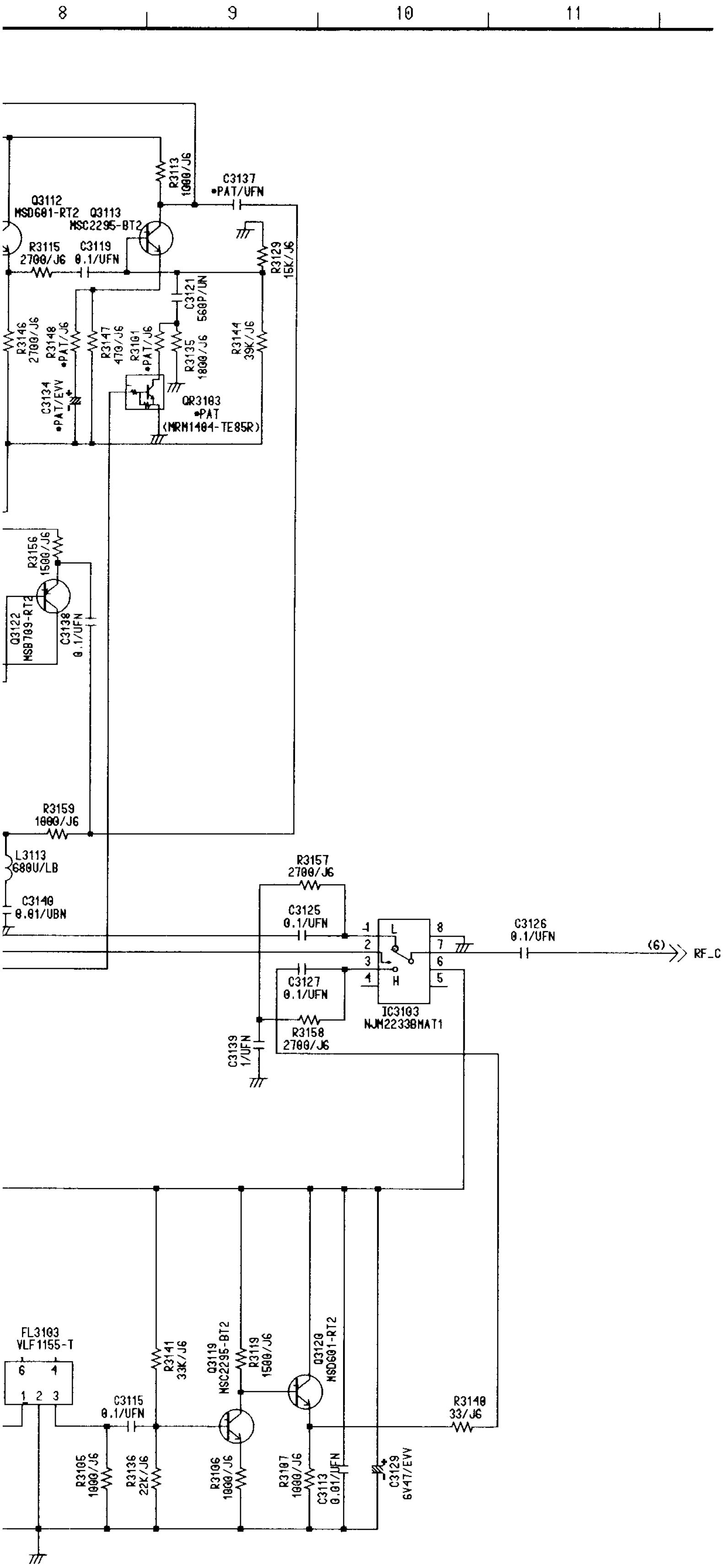

VIDEO I/O-2 DC VOLTAGE CHART

REF. NO.	IC3101									
MODE	1	2	3	4	5	6	7	8		
STOP	2.8	0	2.8	0	2.8	4.7	2.1	0		
REC	2.8	0	2.8	0	2.8	4.7	2.1	0		
REF. NO.	IC3102									
MODE	1	2	3	4	5	6	7	8	9	10
STOP	0	2.1	0	0	2.7	1.3	2.2	0	0	9.4
REC	0	2.1	0	0	2.7	1.3	2.2	0	0	9.4
REF. NO.	IC3102									
MODE	11	12	13	14	15	16				
STOP	1.3	2.8	0	0	2.1	4.5				
REC	1.3	2.8	0	0	2.1	4.5				
REF. NO.	IC3103									
MODE	1	2	3	4	5	6	7	8		
STOP	2.9	0	2.9	0	0	4.9	2.2	0		
REC	2.9	0	2.9	0	0	4.9	2.2	0		
REF. NO.	Q3101			Q3104			Q3105			
MODE	E	C	B	E	C	B	E	C	B	
STOP	−3.7	0.9	−2.8	−0.8	0.8	−0.1	−1.6	1.5	−0.9	
REC	−3.7	1.0	−2.9	−0.8	0.8	−0.1	−1.6	1.5	−0.9	
REF. NO.	Q3106			Q3107			Q3108			
MODE	E	C	B	E	C	B	E	C	B	
STOP	−0.9	−4.8	−1.6	−1.7	1.6	−0.9	−1.0	−4.8	−1.7	
REC	−0.9	−4.8	−1.6	−1.7	1.6	−0.9	−1.0	−4.8	−1.7	
REF. NO.	Q3109			Q3111			Q3112			
MODE	E	C	B	E	C	B	E	C	B	
STOP	−1.7	1.6	−0.9	−1.0	−4.8	−1.7	0.3	4.7	0.9	
REC	−1.7	1.6	−0.9	−1.0	−4.8	−1.6	0.3	4.7	0.9	
REF. NO.	Q3113			Q3114			Q3115			
MODE	E	C	B	E	C	B	E	C	B	
STOP	−2.6	−0.1	−1.8	1.8	4.9	2.4	2.2	4.9	2.8	
REC	−2.6	−0.1	−1.8	1.8	4.9	2.4	2.2	4.9	2.8	
REF. NO.	Q3116			Q3117			Q3118			
MODE	E	C	B	E	C	B	E	C	B	
STOP	0.4	4.3	1.1	3.7	4.9	4.3	2.2	4.9	2.8	
REC	0.4	4.3	1.1	3.7	4.9	4.3	2.2	4.9	2.8	
REF. NO.	Q3119			Q3120						
MODE	E	C	B	E	C	B				
STOP	1.1	3.2	1.8	2.6	4.9	3.2				
REC	1.1	3.2	1.8	2.6	4.9	3.2				
REF. NO.	Q3121						Q3122			
MODE	1	2	3	4	5		E	C	B	
STOP	0	0	0	0	0		−0.2	−4.8	−0.9	
REC	0	0	0	0	0		−0.2	−4.8	−0.9	
REF. NO.	QR3102									
MODE	E	C	B							
STOP	4.7	0	4.7							
REC	4.7	0	4.7							

•=REFER TO THE COMPARISON CHART

Ref No.3100 Series.

VIDEO I/O-4 SCHEMATIC DIAGRAM 4/7 (E5: Page CBA-8)

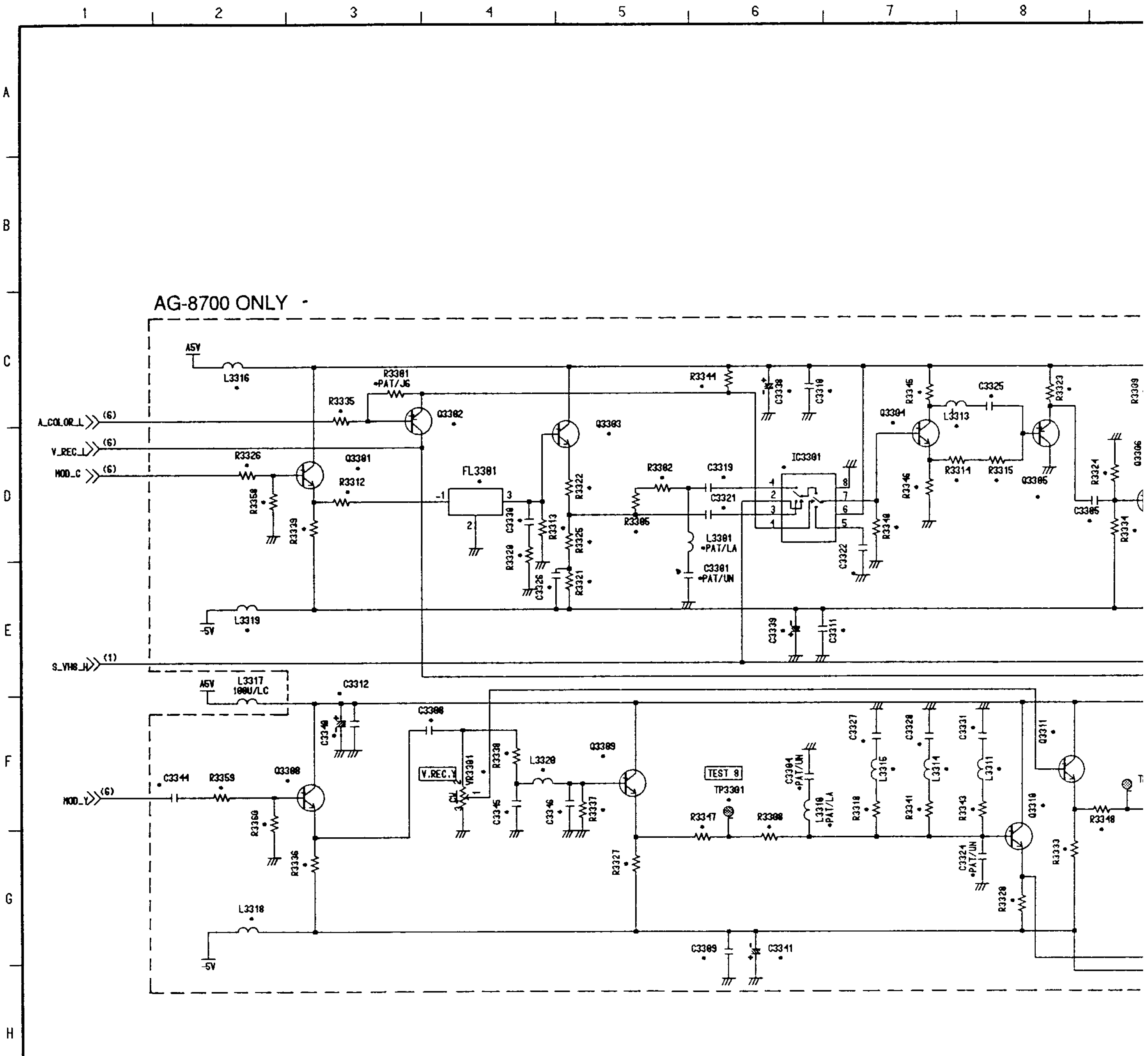

VIDEO I/O-4 DC VOLTAGE CHART

REF. NO.	IC3301										IC3302									
MODE	1	2	3	4	5	6	7	8			1	2	3	4	5	6	7	8		
STOP	2.9	4.9	2.9	3.7	2.9	4.8	2.2	0			4.9	4.9	2.4	2.5	0	2.5	0	2.5		
REC	2.9	4.9	2.9	0.7	2.9	4.8	2.2	0			4.9	4.9	2.4	2.5	0	2.5	0	2.5		
REF. NO.	IC3303																			
MODE	1	2	3	4	5	6	7	8												
STOP	4.9	3.7	2.4	2.5	0	2.5	0	2.5												
REC	4.9	0.1	2.4	2.5	0	2.5	0	2.5												
REF. NO.	Q3301			Q3302			Q3303			Q3304			Q3305			Q3306				
MODE	E	C	B	E	C	B	E	C	B	E	C	B	E	C	B	E	C	B		
STOP	−0.7	4.8	−0.1	3.7	3.7	3.1	−1.0	4.8	−0.4	1.4	3.4	2.2	2.1	0	1.4	−2.7	2.6	−2.1		
REC	−0.7	4.8	−0.1	0.7	0.1	0.1	−1.0	4.8	−0.4	1.4	3.4	2.2	2.1	0	1.4	−2.7	2.6	−2.1		
REF. NO.	Q3307			Q3308			Q3309			Q3310			Q3311			Q3312				
MODE	E	C	B	E	C	B	E	C	B	E	C	B	E	C	B	E	C	B		
STOP	2.0	4.8	2.6	−0.5	4.9	−0.1	−0.6	4.9	0	−1.2	4.9	−0.6	−0.5	4.9	0	−0.8	1.5	0		
REC	2.0	4.8	2.6	−0.5	4.9	−0.1	−0.6	4.8	0	−1.2	4.9	−0.6	−0.5	4.9	0	−0.8	1.5	0		

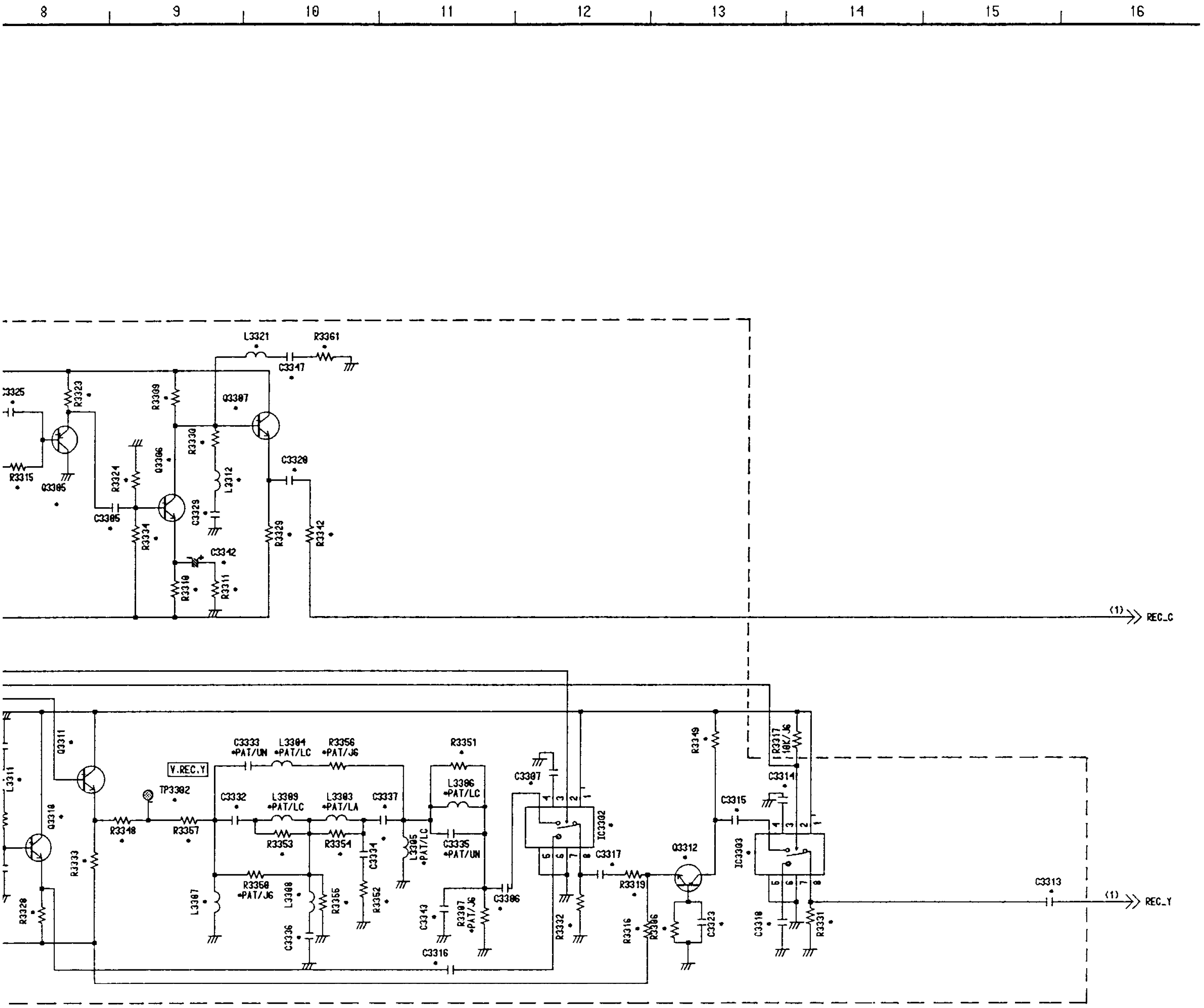

8		
2.5		
2.5		
B		
-2.1		
-2.1		
B		
0		
0		

*PAT=PATTERN ONLY
**REFER TO THE COMPARISON CHART
Ref No.3300 Series.

VIDEO I/O-5 SCHEMATIC DIAGRAM 5/7 (E5: Page CBA-8)

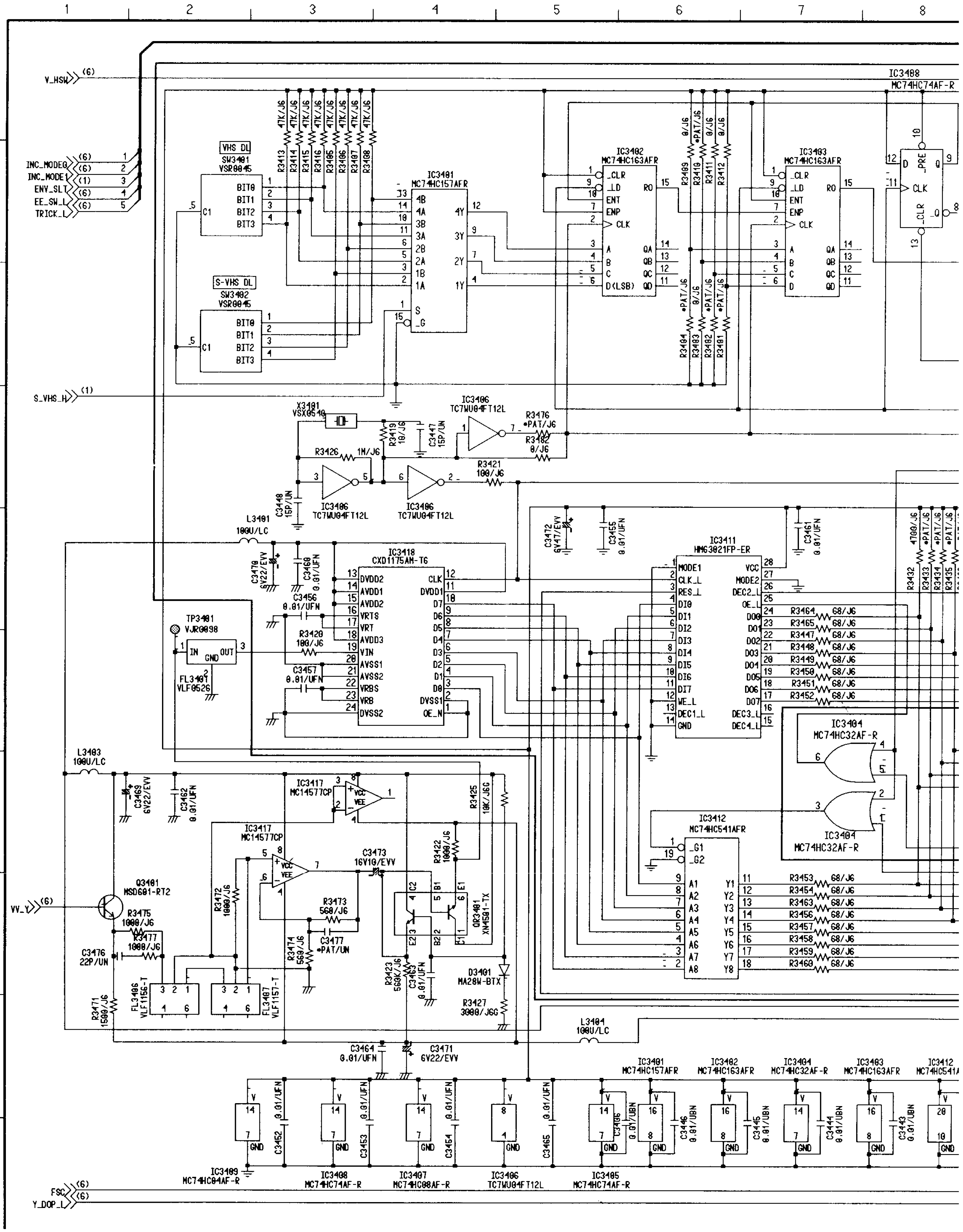

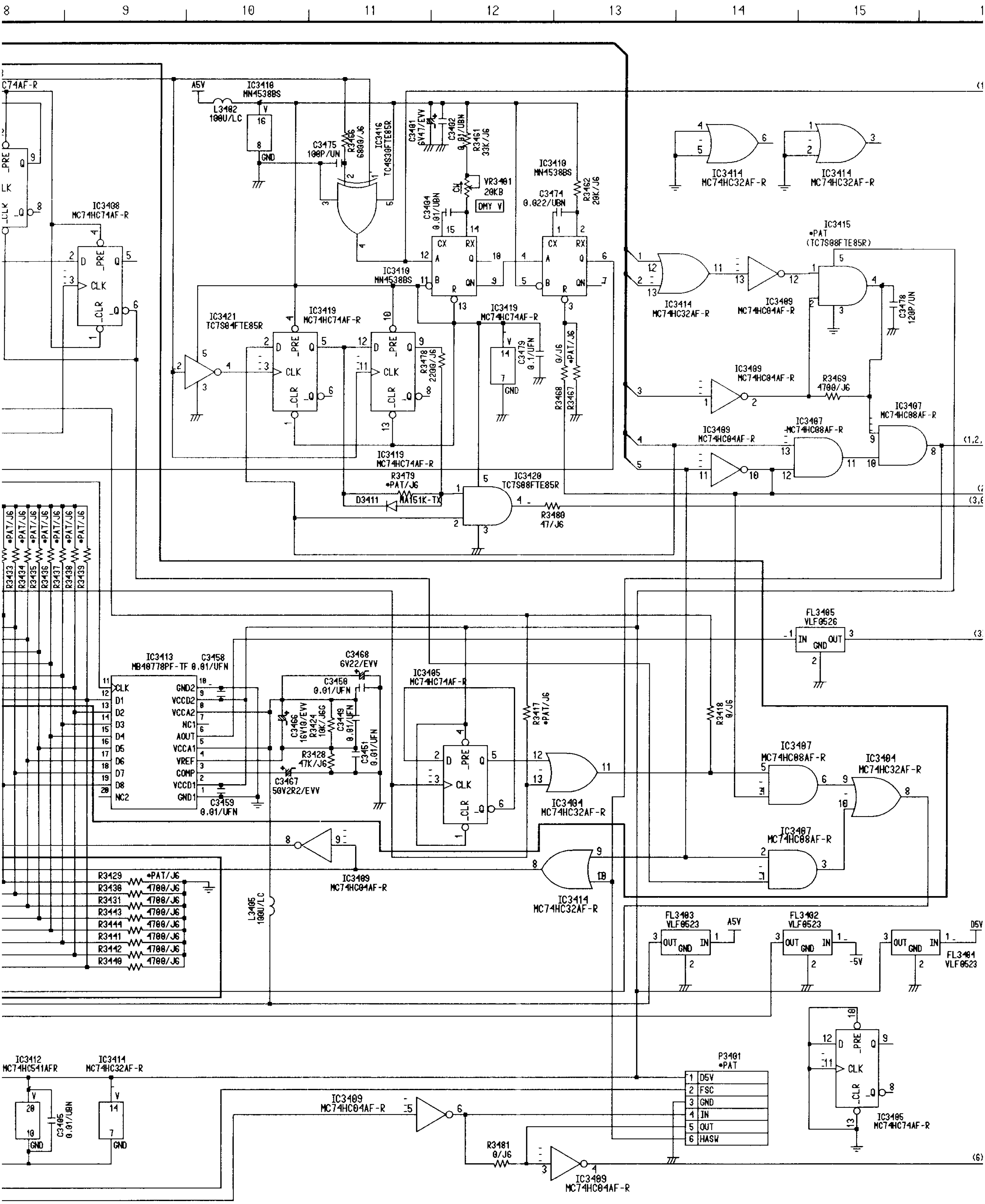

*=REFER TO THE COMPARISON CHART

Ref No.3400 Series.

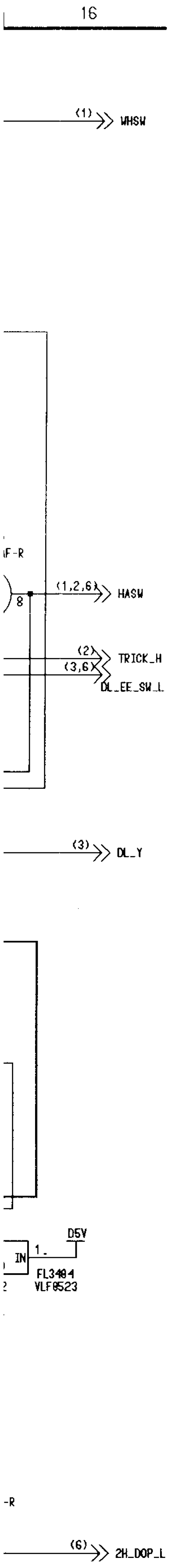

VIDEO I/O-5 DC VOLTAGE CHART

REF. NO.	IC3401																			
MODE	1	2	3	4	5	6	7	8	9	10	11	12	13	14	15	16				
STOP	4.9	0	0	0	0	0	0	0	5.1	5.1	5.1	5.1	5.1	5.1	0	5.1				
REC	4.9	0	0	0	0	0	0	0	5.1	5.1	5.1	5.1	5.1	5.1	0	5.1				
REF. NO.	IC3402																			
MODE	1	2	3	4	5	6	7	8	9	10	11	12	13	14	15	16				
STOP	5.1	2.6	5.1	5.1	0	0	5.1	0	5.1	0.1	0	0	0	5.1	0	5.1				
REC	5.1	2.6	5.1	5.1	0	0	5.1	0	5.1	0	0	0	0	5.1	0	5.1				
REF. NO.	IC3403																			
MODE	1	2	3	4	5	6	7	8	9	10	11	12	13	14	15	16				
STOP	5.1	2.6	5.1	0	5.1	5.1	0	0	5.1	0.1	5.1	5.1	5.1	5.1	0	5.1				
REC	5.1	2.6	5.1	0	5.1	5.1	0	0	5.1	0.1	5.1	5.1	5.1	5.1	0	5.1				
REF. NO.	IC3404																			
MODE	1	2	3	4	5	6	7	8	9	10	11	12	13	14						
STOP	5.1	0	5.1	0	0	0	0	5.1	0	5.1	5.1	2.6	3.9	5.1						
REC	5.1	0	5.1	0	0	0	0	5.1	0	5.1	5.1	2.4	3.9	5.1						
REF. NO.	IC3405																			
MODE	1	2	3	4	5	6	7	8	9	10	11	12	13	14						
STOP	5.1	2.5	3.9	5.1	2.6	2.5	0	5.1	5.1	0	0	0	0	5.1						
REC	5.1	2.7	3.9	5.1	2.5	2.7	0	5.1	5.1	0	0	0	0	5.1						
REF. NO.	IC3406																			
MODE	1	2	3	4	5	6	7	8												
STOP	2.6	2.6	2.4	0	2.6	2.5	2.5	5.1												
REC	2.6	2.6	2.4	0	2.6	2.6	2.6	5.1												
REF. NO.	IC3407																			
MODE	1	2	3	4	5	6	7	8	9	10	11	12	13	14						
STOP	5.1	3.4	5.1	0	5.1	0	0	0	2.6	0	0	0	0	5.1						
REC	5.1	3.4	5.1	0	5.1	0	0	0	5.1	0	0	0	0	5.1						
REF. NO.	IC3408																			
MODE	1	2	3	4	5	6	7	8	9	10	11	12	13	14						
STOP	5.1	0	2.6	5.1	0	5.1	0	5.1	0.1	5.1	5.1	5.1	5.1	5.1						
REC	5.1	0	2.6	5.1	0	5.1	0	5.1	0.1	5.1	5.1	5.1	5.1	5.1						
REF. NO.	IC3409																			
MODE	1	2	3	4	5	6	7	8	9	10	11	12	13	14						
STOP	2.4	2.6	0	5.2	0	5.2	0	0	5.2	0	3.4	5.2	0	5.2						
REC	0.1	5.1	0	5.1	0	5.1	0	0	5.1	0	3.4	5.1	0	5.1						
REF. NO.	IC3410																			
MODE	1	2	3	4	5	6	7	8	9	10	11	12	13	14	15	16				
STOP	0	4.9	0	4.8	4.9	0	4.9	0	4.8	0.1	4.9	0	4.9	4.9	0	4.9				
REC	0	4.9	0	4.8	4.9	0	4.9	0	4.8	0.1	4.9	0	4.9	4.9	0	4.9				
REF. NO.	IC3411																			
MODE	1	2	3	4	5	6	7	8	9	10	11	12	13	14	15	16	17	18	19	20
STOP	0	2.6	5.1	0.1	0	0	0	4.8	0	0	0	0	3.9	0	4.0	4.0	0	0	0	3.6
REC	0	2.6	5.1	0.3	0	0	0	4.8	0	0	0	0	3.9	0	4.0	4.0	0	0	0	3.6
REF. NO.	IC3411																			
MODE	21	22	23	24	25	26	27	28												
STOP	0	0	0	0.3	0	3.9	0	5.1												
REC	0	0	0	0.8	0	3.9	0	5.1												
REF. NO.	IC3412																			
MODE	1	2	3	4	5	6	7	8	9	10	11	12	13	14	15	16	17	18	19	20
STOP	5.1	0	0	0	4.8	0	0	0	0	0	0.3	0	0	0	3.6	0	0	0	0	5.1
REC	5.1	0	0	0	4.8	0	0	0	0.1	0	0.3	0	0	0	3.6	0	0	0	0	5.1
REF. NO.	IC3413																			
MODE	1	2	3	4	5	6	7	8	9	10	11	12	13	14	15	16	17	18	19	20
STOP	0	5.1	2.3	4.0	4.9	4.0	0	4.9	5.1	0	2.6	0	0	0	3.6	0	0	0	0.4	0
REC	0	5.1	2.3	4.0	4.9	4.0	0	4.9	5.1	0	2.6	0	0	0	3.6	0	0	0	0	0
REF. NO.	IC3414																			
MODE	1	2	3	4	5	6	7	8	9	10	11	12	13	14						
STOP	0	0	0	0	0	0	0	5.2	3.4	0	0	0	0	5.2						
REC	0	0	0	0	0	0	0	5.1	3.4	0	0	0	0	5.1						
REF. NO.	IC3416										IC3417									
MODE	1	2	3	4	5						1	2	3	4	5	6	7	8		
STOP	2.5	2.5	0	0	4.9						3.1	0	0	−4.8	0	0.1	0.3	4.8		
REC	2.5	2.5	0	0	4.9						3.1	0	0	−4.8	0	0.1	0.3	4.8		
REF. NO.	IC3418																			
MODE	1	2	3	4	5	6	7	8	9	10	11	12	13	14	15	16	17	18	19	20
STOP	0	0	0.4	0.3	0.4	0.4	3.9	0	0	0	4.8	2.6	4.8	4.9	4.9	2.6	2.6	4.9	0.8	0
REC	0	0	0	0	0	0	4.8	0	0	0	4.8	2.6	4.8	4.8	4.8	2.6	2.6	4.8	0.8	0
REF. NO.	IC3418																			
MODE	21	22	23	24																
STOP	0	0.6	0.6	0																
REC	0	0.6	0.6	0																

S.

REF. NO.	IC3419									
MODE	1	2	3	4	5	6	7	8	9	10
STOP	4.9	0	2.5	4.9	0	4.9	0	4.9	0	4.9
REC	4.9	0	2.5	4.9	0	4.9	0	4.9	0	4.9
REF. NO.	IC3419									
MODE	11	12	13	14						
STOP	2.5	0	4.9	4.9						
REC	2.5	0	4.9	4.9						
REF. NO.	IC3420					IC3421				
MODE	1	2	3	4	5	1	2	3	4	5
STOP	0	0	0	0	4.9	0	2.5	0	2.5	4.9
REC	0	0	0	0	4.9	0	2.5	0	2.5	4.9
REF. NO.	Q3401									
MODE	E	C	B							
STOP	0.3	4.8	0.9							
REC	0.3	4.8	0.9							
REF. NO.	QR3401									
MODE	1	2	3	4	5	6				
STOP	4.8	1.9	1.4	4.8	1.4	0.8				
REC	4.8	1.9	1.4	4.8	1.4	0.8				

IC3418
CXD1175AM

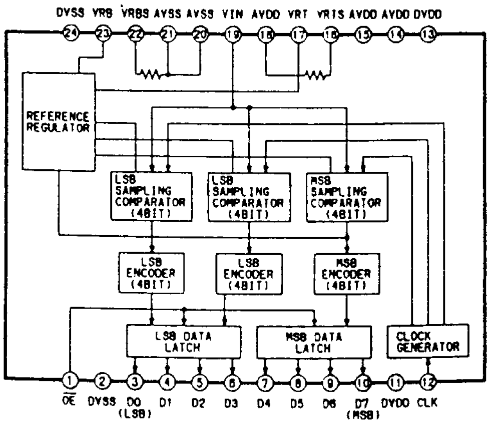

VIDEO I/O-6 SCHEMATIC DIAGRAM 6/7 (E5: Page CBA-8)

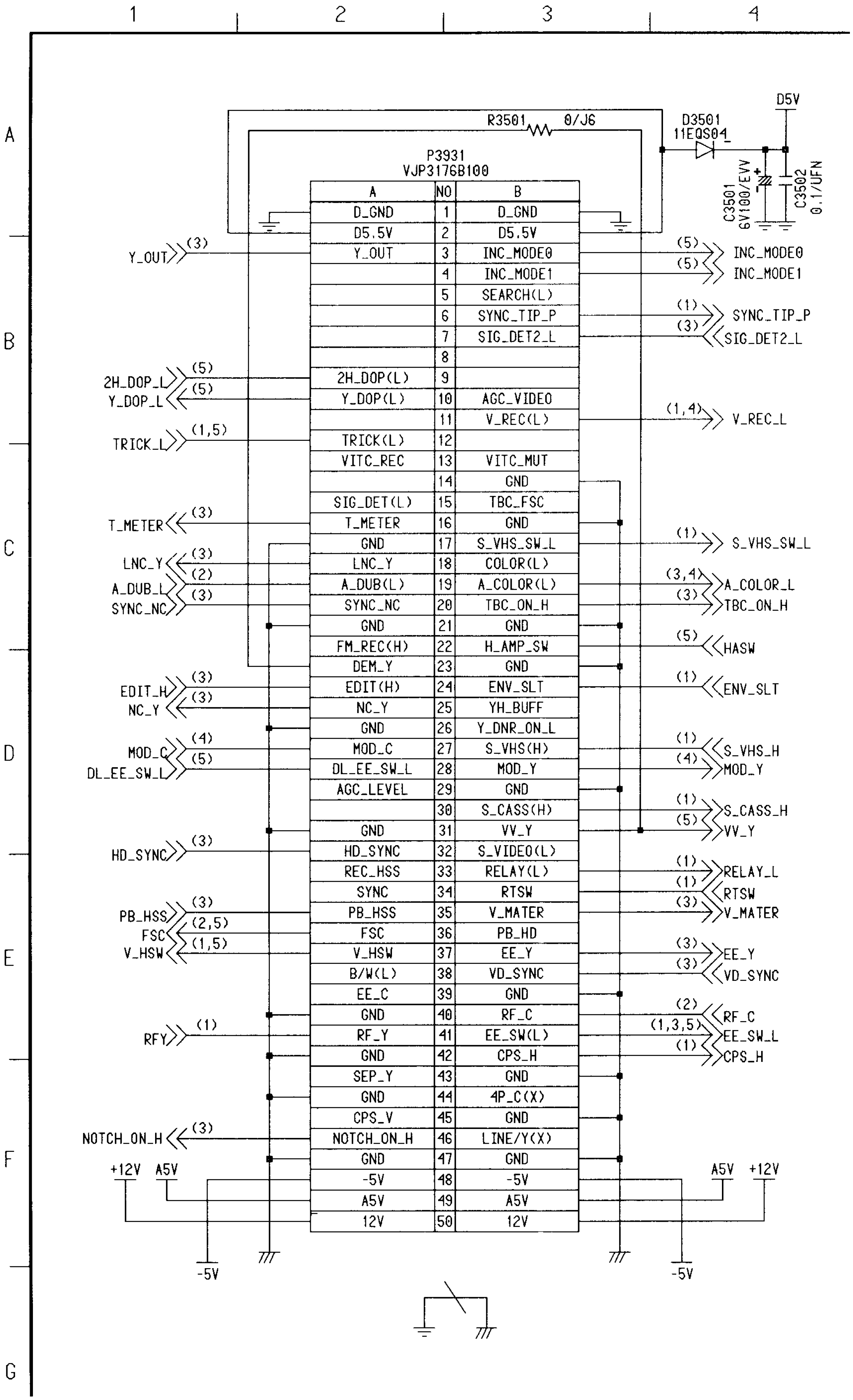

VIDEO I/O COMPARISON CHART 7/7 (E5: Page CBA-8)

REF	AG-8700	AG-8600
C3004	0. 022/UBN	*PAT/UBN
C3005	50VR47/EVV	*PAT/EVV
C3031	*PAT/UN	*PAT/UN
C3036	*PAT/UN	*PAT/UN
C3052	6V22/EVV	*PAT/EVV
C3082	*PAT/UN	*PAT/UN
C3084	*PAT/UFN	*PAT/UFN
C3101	*PAT/UFN	*PAT/UFN
C3128	*PAT/EVV	*PAT/EVV
C3134	*PAT/EVV	*PAT/EVV
C3137	*PAT/UFN	*PAT/UFN
C3222	*PAT/UN	*PAT/UN
C3238	25V4R7/EVN	*PAT/EVN
C3301	*PAT/UFN	*PAT/UFN
C3304	*PAT	*PAT
C3305	0. 1/UFN	*PAT/UFN
C3306	0. 01/UBN	*PAT/UBN
C3307	0. 01/UBN	*PAT/UBN
C3308	0. 01/UBN	*PAT/UBN
C3309	0. 01/UBN	*PAT/UBN
C3310	0. 01/UBN	*PAT/UBN
C3311	0. 01/UBN	*PAT/UBN
C3312	0. 01/UBN	*PAT/UBN
C3313	0. 01/UBN	*PAT/UBN
C3314	0. 01/UBN	*PAT/UBN
C3315	0. 01/UBN	*PAT/UBN
C3316	0. 01/UBN	*PAT/UBN
C3317	0. 01/UBN	*PAT/UBN
C3318	0. 01/UBN	*PAT/UBN
C3319	0. 1/ZFN	*PAT/ZFN
C3320	0. 1/ZFN	*PAT/ZFN
C3321	0. 1/ZFN	*PAT/ZFN
C3322	0. 1/ZFN	*PAT/ZFN
C3323	0. 1/ZFN	*PAT/ZFN
C3324	*PAT/UN	*PAT/UN
C3325	120P/UN	*PAT/UN
C3326	150P/UN	*PAT/UN
C3327	18P/UN	*PAT/UN
C3328	220P/UN	*PAT/UN
C3329	270P/UN	*PAT/UN
C3330	330P/UN	*PAT/UN
C3331	390P/UN	*PAT/UN
C3332	39P/UN	*PAT/UN
C3333	*PAT/UFN	*PAT/UFN
C3334	10P/UN	*PAT/UN
C3335	*PAT/UFN	*PAT/UFN

REF	AG-8700	AG-8600
C3336	180P/UN	*PAT/UN
C3337	0. 01/UFN	*PAT/UFN
C3338	6V47/EVV	*PAT/EVV
C3339	6V47/EVV	*PAT/EVV
C3340	6V47/EVV	*PAT/EVV
C3341	6V47/EVV	*PAT/EVV
C3342	50V3R3/EVV	*PAT/EVV
C3343	18P/UN	*PAT/UN
C3344	0. 01/UBN	*PAT/UBN
C3345	33P/UN	*PAT/UN
C3346	33P/UN	*PAT/UN
C3347	68P/UN	*PAT/UN
C3477	*PAT/UN	*PAT/UN
C3606	*PAT/UFN	*PAT/UFN
D3001	MA151K-TX	*PAT
D3004	*PAT	*PAT
D3005	*PAT	*PAT
D3205	*PAT	*PAT
FL3301	ELB4H068	*PAT
IC3008	*PAT	*PAT
IC3009	*PAT	*PAT
IC3301	NJM2234MA-T1	*PAT
IC3302	AN6308S	*PAT
IC3303	AN6308S	*PAT
IC3415	*PAT	*PAT
L3005	*PAT/LA	*PAT/LA
L3301	*PAT/LA	*PAT/LA
L3303	*PAT/LA	*PAT/LA
L3304	*PAT/LC	*PAT/LC
L3305	*PAT/LC	*PAT/LC
L3306	*PAT/LC	*PAT/LC
L3307	82U/LA	*PAT/LA
L3308	150U/LA	*PAT/LA
L3309	*PAT/LC	*PAT/LC
L3310	*PAT/LA	*PAT/LA
L3311	100U/LA	*PAT/LA
L3312	220U/LA	*PAT/LA
L3313	220U/LA	*PAT/LA
L3314	4R7U/LA	*PAT/LA
L3315	6R8U/LA	*PAT/LA
L3316	100U/LC	*PAT/LC
L3318	100U/LC	*PAT/LC
L3319	100U/LC	*PAT/LC
L3320	6R8U/LA	*PAT/LA
L3321	150U/LA	*PAT/LA
P3401	*PAT	*PAT

REF	AG-8700	AG-8600
Q3003	2SB643-QRS	*PAT
Q3301	MSD601-RT2	*PAT
Q3302	MSB709-RT2	*PAT
Q3303	MSD601-RT2	*PAT
Q3304	MSC2295-BT2	*PAT
Q3305	MSB709-RT2	*PAT
Q3306	MSD601-RT2	*PAT
Q3307	MSD601-RT2	*PAT
Q3308	MSD601-RT2	*PAT
Q3309	MSD601-RT2	*PAT
Q3310	MSD601-RT2	*PAT
Q3311	MSD601-RT2	*PAT
Q3312	MSC2295-BT2	*PAT
QR3001	MRN2404TE85R	*PAT
QR3002	DTC363EK-T97	*PAT
QR3011	MRN1404TE85R	*PAT
QR3012	*PAT	*PAT
QR3013	*PAT	*PAT
QR3103	*PAT	*PAT
R3005	3300/J6	*PAT/J6
R3006	22K/J6	*PAT/J6
R3007	3300/J6	*PAT/J6
R3008	3300/J6	*PAT/J6
R3014	*PAT/J6	*PAT/J6
R3017	*PAT/J6	*PAT/J6
R3035	*PAT/J6	*PAT/J6
R3043	*PAT/J6	*PAT/J6
R3063	*PAT/J6	*PAT/J6
R3076	*PAT/J6	*PAT/J6
R3078	*PAT/J6	*PAT/J6
R3087	*PAT/J6	*PAT/J6
R3088	*PAT/J6	*PAT/J6
R3101	*PAT/J6	*PAT/J6
R3102	*PAT/J6	*PAT/J6
R3148	*PAT/J6	*PAT/J6
R3155	*PAT/J6	*PAT/J6
R3202	*PAT/J6	*PAT/J6
R3300	1M/J6	1/UFN
R3301	*PAT/J6	*PAT/J6
R3302	0/J6	*PAT/J6
R3305	0/J6	*PAT/J6

REF	AG-8700	AG-8600
R3306	100/J6	*PAT/J6
R3307	*PAT/J6	*PAT/J6
R3308	1200/J6	*PAT/J6
R3309	1000/J6	*PAT/J6
R3310	1000/J6	*PAT/J6
R3311	390/J6	*PAT/J6
R3312	1000/J6	*PAT/J6
R3313	1000/J6	*PAT/J6
R3314	1000/J6	*PAT/J6
R3315	1000/J6	*PAT/J6
R3316	1000/J6	*PAT/J6
R3318	100/J6	*PAT/J6
R3319	220/J6	*PAT/J6
R3320	620/J6	*PAT/J6
R3321	1500/J6	*PAT/J6
R3322	0/J6	*PAT/J6
R3323	1500/J6	*PAT/J6
R3324	15K/J6	*PAT/J6
R3325	220/J6	*PAT/J6
R3326	220/J6	*PAT/J6
R3327	2200/J6	*PAT/J6
R3328	2200/J6	*PAT/J6
R3329	2200/J6	*PAT/J6
R3330	2200/J6	*PAT/J6
R3331	2200/J6	*PAT/J6
R3332	2200/J6	*PAT/J6
R3333	2200/J6	*PAT/J6
R3334	22K/J6	*PAT/J6
R3335	22K/J6	*PAT/J6
R3336	1500/J6	*PAT/J6
R3337	330/J6	*PAT/J6
R3338	330/J6	*PAT/J6
R3339	1500/J6	*PAT/J6
R3340	3300/J6	*PAT/J6
R3341	510/J6	*PAT/J6
R3342	47/J6	*PAT/J6
R3343	330/J6	*PAT/J6
R3344	4700/J6	*PAT/J6
R3345	680/J6	*PAT/J6
R3346	680/J6	*PAT/J6
R3347	82/J6	*PAT/J6
R3348	82/J6	*PAT/J6
R3349	820/J6	*PAT/J6
R3350	*PAT/J6	*PAT/J6
R3351	0/J6	*PAT/J6
R3352	680/J6	*PAT/J6

REF	AG-8700	AG-8600
R3353	0/J6	*PAT/J6
R3354	2200/J6	*PAT/J6
R3355	1000/J6	*PAT/J6
R3356	*PAT/J6	*PAT/J6
R3357	560/J6	*PAT/J6
R3358	10K/J6	*PAT/J6
R3359	220/J6	*PAT/J6
R3360	10K/J6	*PAT/J6
R3361	1800/J6	*PAT/J6
R3401	*PAT/J6	*PAT/J6
R3402	*PAT/J6	*PAT/J6
R3404	*PAT/J6	*PAT/J6
R3410	*PAT/J6	*PAT/J6
R3417	*PAT/J6	*PAT/J6
R3429	*PAT/J6	*PAT/J6
R3433	*PAT/J6	*PAT/J6
R3434	*PAT/J6	*PAT/J6
R3435	*PAT/J6	*PAT/J6
R3436	*PAT/J6	*PAT/J6
R3437	*PAT/J6	*PAT/J6
R3438	*PAT/J6	*PAT/J6
R3439	*PAT/J6	*PAT/J6
R3467	*PAT/J6	*PAT/J6
R3476	*PAT/J6	*PAT/J6
R3479	*PAT/J6	*PAT/J6
R3502	*PAT/J6	*PAT/J6
R3503	*PAT/J6	*PAT/J6
R3612	*PAT/J6	*PAT/J6
TP3301	VJR0098	*PAT
TP3302	VJR0098	*PAT
VR3301	2KB	*PAT
R3613	*PAT/J6	*PAT/J6

VIDEO YC-1 SCHEMATIC DIAGRAM 1/6 (E6: Page CBA-7)

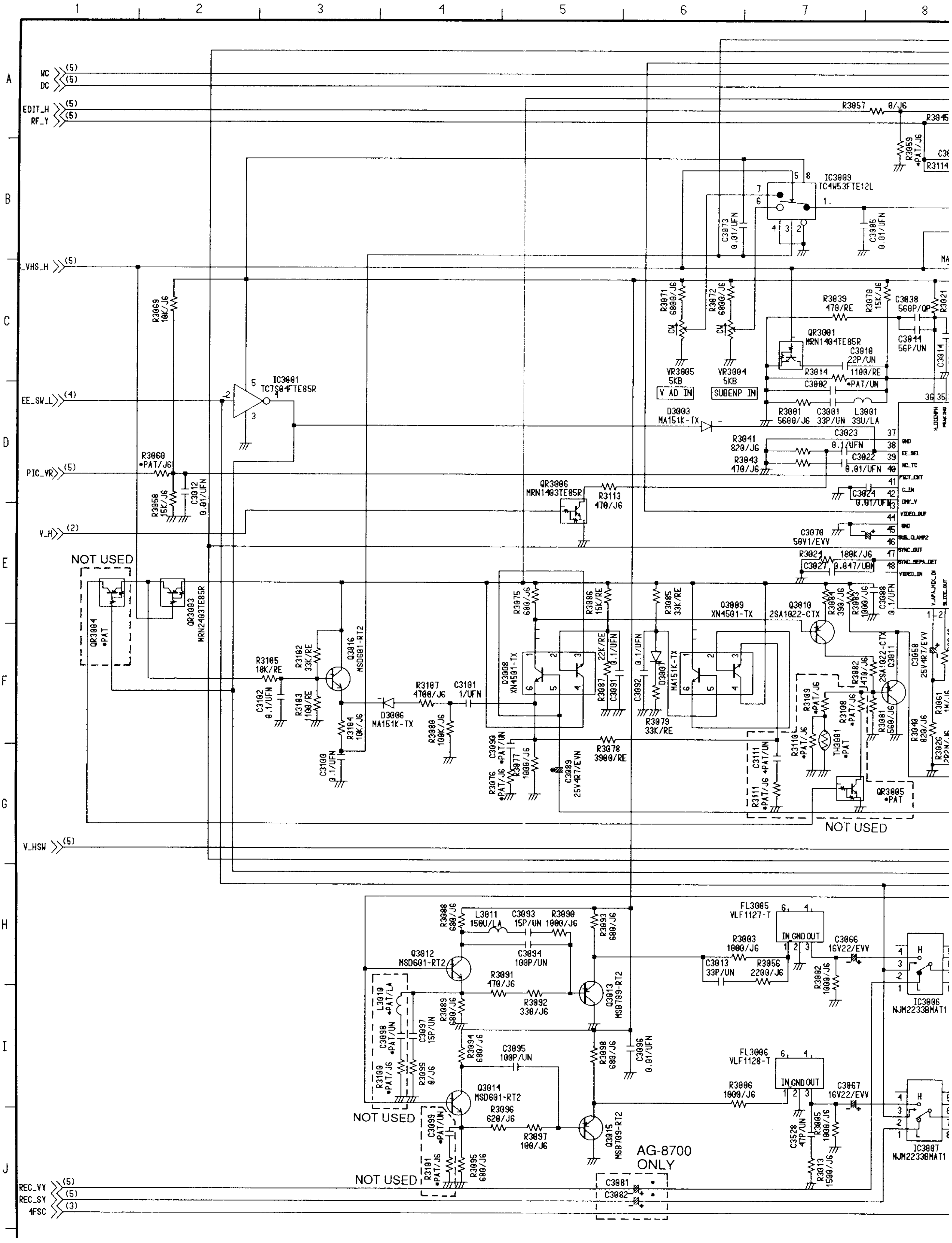

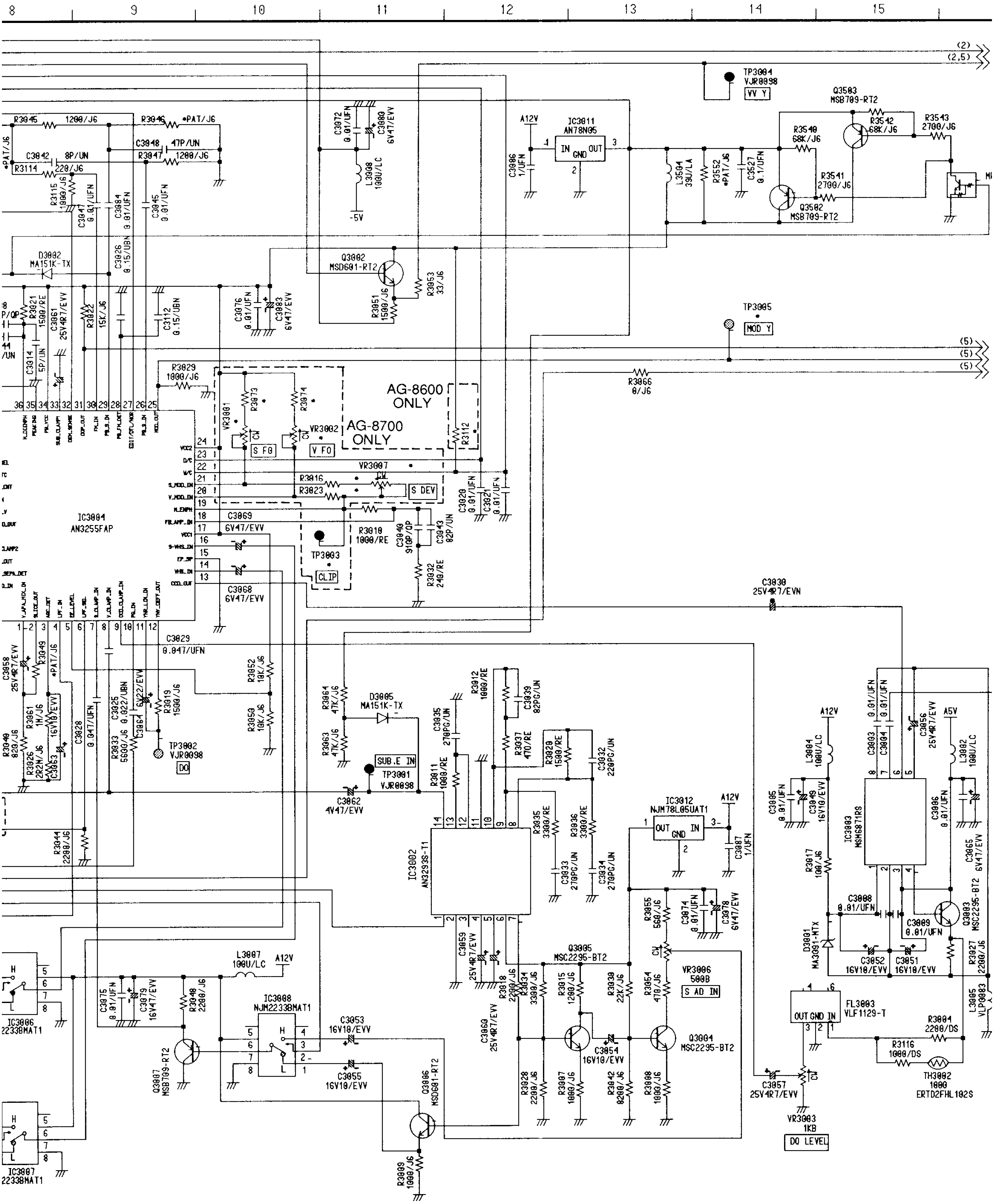

Ref No.3000 Series.

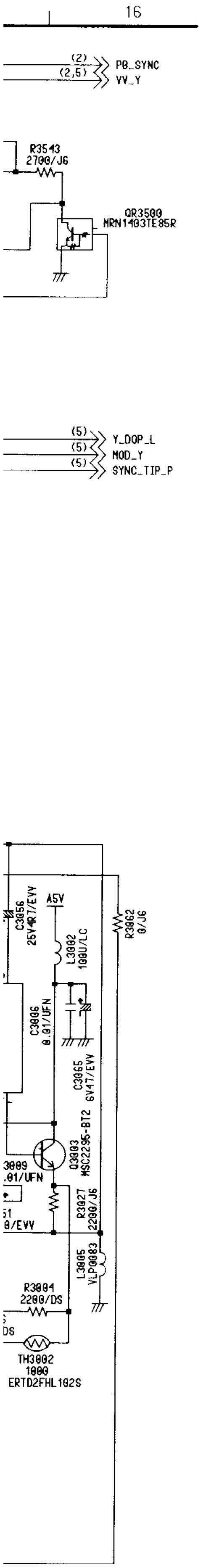

VIDEO YC-1 DC VOLTAGE CHART

REF. NO.	IC3001				
MODE	1	2	3	4	5
STOP	0	0	0	5.0	5.0
REC	0	0	0	5.0	5.0

REF. NO.	IC3002													
MODE	1	2	3	4	5	6	7	8	9	10	11	12	13	14
STOP	5.0	0	5.0	3.6	3.3	5.1	2.4	2.9	2.9	2.9	0	3.6	3.6	2.0
REC	5.0	0	5.0	3.6	3.3	5.1	2.4	2.9	2.9	2.9	0	3.6	3.6	2.0

REF. NO.	IC3003							
MODE	1	2	3	4	5	6	7	8
STOP	9.1	0	4.8	3.3	3.2	1.8	1.6	4.7
REC	9.1	0	4.8	3.3	3.2	1.8	1.6	4.7

REF. NO.	IC3004																			
MODE	1	2	3	4	5	6	7	8	9	10	11	12	13	14	15	16	17	18	19	20
STOP	2.7	2.7	2.4	2.0	2.5	2.7	2.3	2.2	2.3	2.5	2.8	1.9	1.5	2.0	0	2.1	4.9	2.2	2.2	2.1
REC	2.7	2.7	2.4	2.0	2.5	2.7	2.3	2.2	2.3	2.5	2.8	1.9	1.5	2.0	0	2.1	4.9	2.2	2.2	2.1

REF. NO.	IC3004																			
MODE	21	22	23	24	25	26	27	28	29	30	31	32	33	34	35	36	37	38	39	40
STOP	2.1	3.8	2.4	4.9	3.2	2.8	4.9	2.1	2.9	2.9	1.3	0.8	2.7	4.9	0	3.3	0	4.5	2.0	3.0
REC	2.1	3.8	1.5	4.9	3.2	2.8	4.9	2.0	2.9	2.9	1.3	0.8	2.7	4.9	1.5	3.3	0	4.5	2.0	3.0

REF. NO.	IC3004							
MODE	41	42	43	44	45	46	47	48
STOP	3.3	0	1.5	0	2.7	0.4	2.7	2.8
REC	3.3	0	1.5	0	2.7	0.4	2.7	2.8

REF. NO.	IC3006								IC3007							
MODE	1	2	3	4	5	6	7	8	1	2	3	4	5	6	7	8
STOP	6.9	0	7.0	0	0	11.3	6.2	0	6.9	0	7.0	0	0	11.3	6.2	0
REC	6.9	0	7.0	0	0	11.3	6.2	0	6.9	0	7.0	0	0	11.3	6.2	0

REF. NO.	IC3008								IC3009							
MODE	1	2	3	4	5	6	7	8	1	2	3	4	5	6	7	8
STOP	6.9	0	7.0	0	0	11.3	6.2	0	0.8	0	−4.9	0	4.9	0.8	1.0	4.9
REC	6.9	0	7.0	0	0	11.3	6.2	0	0.8	0	−4.9	0	4.9	0.8	1.0	4.9

REF. NO.	IC3011			IC3012		
MODE	I	G	O	I	G	O
STOP	11.4	0	5.0	11.4	0	5.0
REC	11.4	0	5.0	11.4	0	5.0

REF. NO.	Q3002			Q3003			Q3004			Q3005			Q3006			Q3007		
MODE	E	C	B	E	C	B	E	C	B	E	C	B	E	C	B	E	C	B
STOP	0.9	4.9	1.5	2.5	4.8	3.3	0.7	4.0	1.4	1.5	3.3	2.2	1.6	11.3	2.2	6.9	0	6.2
REC	0.9	4.9	1.5	2.5	4.9	3.3	0.7	4.0	1.4	1.5	3.3	2.2	1.6	11.3	2.2	6.9	0	6.2

REF. NO.	Q3008						Q3009						Q3010			Q3011		
MODE	1	2	3	4	5	6	1	2	3	4	5	6	E	C	B	E	C	B
STOP	3.7	3.0	2.6	5.0	2.6	2.0	5.0	2.4	2.0	5.0	2.7	2.4	4.4	1.7	0	3.3	0	2.7
REC	3.7	3.0	2.6	5.0	2.6	2.0	5.0	2.4	2.0	5.0	2.7	2.4	4.4	1.7	0	3.3	0	2.7

REF. NO.	Q3012			Q3013			Q3014			Q3015			Q3502			Q3503		
MODE	E	C	B	E	C	B	E	C	B	E	C	B	E	C	B	E	C	B
STOP	1.4	3.5	2.0	2.1	0	1.4	1.4	3.5	2.0	2.1	0	1.4	5.0	4.9	4.2	5.0	4.9	4.3
REC	1.4	3.5	2.0	2.1	0	1.4	1.4	3.5	2.0	2.1	0	1.4	5.0	4.9	4.2	5.0	4.9	4.3

REF. NO.	QR3001			QR3003			QR3500		
MODE	E	C	B	E	C	B	E	C	B
STOP	0	0	4.9	5.0	0.2	4.9	0	0.1	4.9
REC	0	0	4.9	5.0	4.9	0.2	0	0.1	4.9

IC3003
MSM6871RS

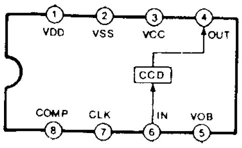

ries.

VIDEO YC-2 SCHEMATIC DIAGRAM 2/6 (E6: Page CBA-7)

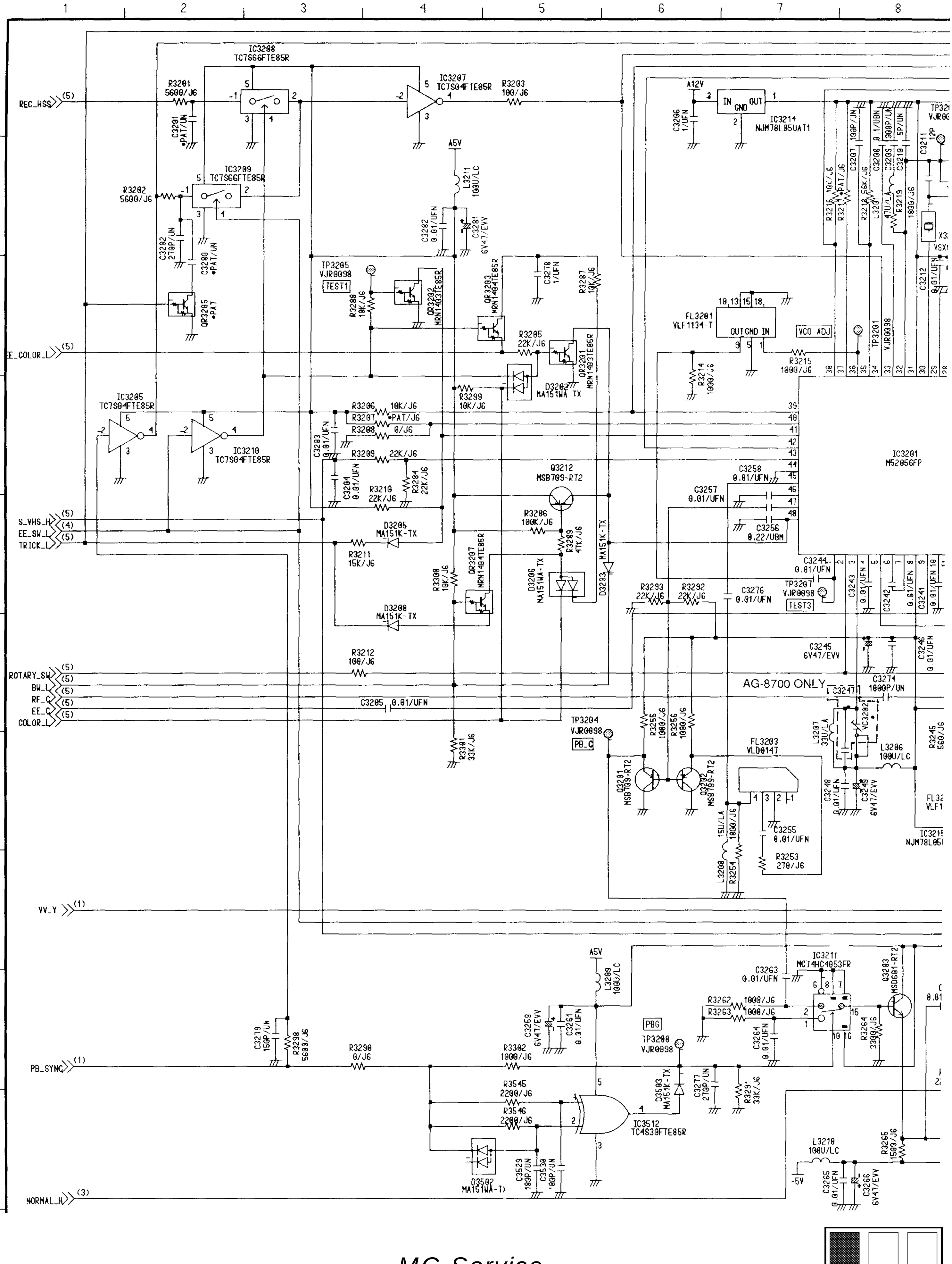

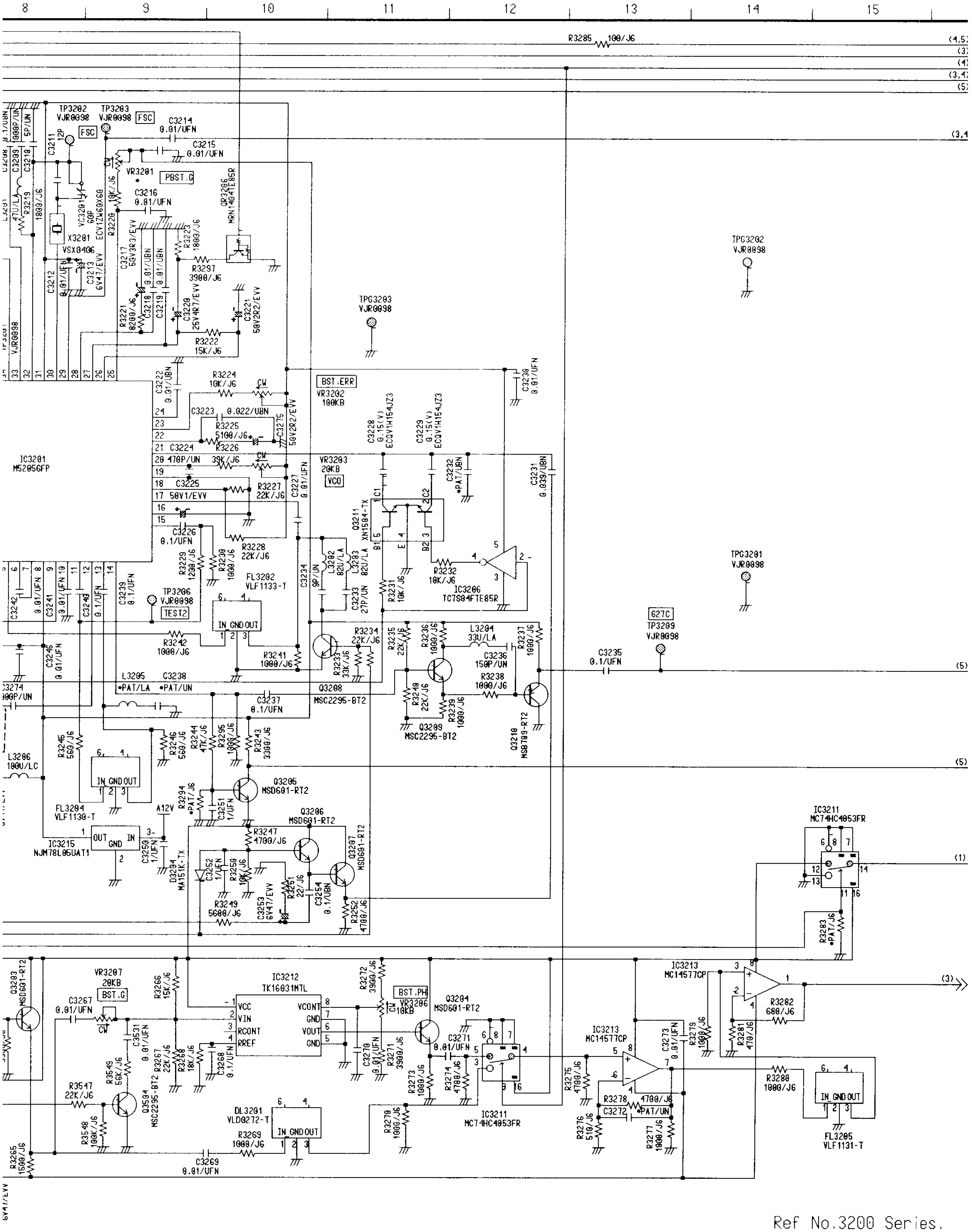

Ref No.3200 Series.

16

(4,5) VV_SYNC
(3) SYNC
(4) PB_BGP
(3,4) VV_C
(5) CPS_H

(3,4) PB_FSC

(5) 627_REC_C

(5) A_COLOR_L

(1) V_H

(3) PBC_OUT

VIDEO YC-2 DC VOLTAGE CHART

REF. NO.	IC3201																			
MODE	1	2	3	4	5	6	7	8	9	10	11	12	13	14	15	16	17	18	19	20
STOP	2.3	2.4	5.1	3.2	2.4	3.0	3.9	5.1	3.1	3.4	2.3	3.2	3.1	2.5	3.2	3.4	3.2	2.6	0	0
REC	2.3	2.4	5.1	3.2	2.4	3.0	3.9	5.1	3.1	3.4	2.3	3.2	3.1	2.5	3.2	3.4	3.2	2.6	0	0
REF. NO.	IC3201																			
MODE	21	22	23	24	25	26	27	28	29	30	31	32	33	34	35	36	37	38	39	40
STOP	2.3	3.4	2.0	3.2	0.9	3.4	3.4	4.0	3.6	3.2	5.1	3.9	3.2	0.4	3.0	2.7	0	4.2	4.4	0
REC	2.3	3.4	2.0	3.2	0.9	3.4	3.4	4.0	3.6	3.0	5.1	3.9	3.2	0.4	3.0	2.7	0	4.2	4.4	0
REF. NO.	IC3201																			
MODE	41	42	43	44	45	46	47	48												
STOP	0	2.5	2.5	0	3.2	3.4	2.5	4.9												
REC	0	2.5	2.5	0	3.2	3.4	2.5	4.9												
REF. NO.	IC3205										IC3206									
MODE	1	2	3	4	5						1	2	3	4	5					
STOP	0	0.4	0	4.5	4.9						0	2.4	0	2.5	5.1					
REC	0	0.4	0	4.5	4.9						0	2.4	0	2.5	5.1					
REF. NO.	IC3207										IC3208									
MODE	1	2	3	4	5						1	2	3	4	5					
STOP	0	4.6	0	0.4	4.9						4.6	4.6	0	4.9	4.9					
REC	0	4.6	0	0.4	4.9						4.6	4.6	0	4.9	4.9					
REF. NO.	IC3209										IC3210									
MODE	1	2	3	4	5						1	2	3	4	5					
STOP	4.5	4.6	0	0	4.9						0	0	0	4.9	4.9					
REC	4.5	4.9	0	0	4.9						0	0	0	4.9	4.9					
REF. NO.	IC3211																			
MODE	1	2	3	4	5	6	7	8	9	10	11	12	13	14	15	16				
STOP	0	0	0	0	0	0	0	0	4.4	0.3	0	0	0	0	0	4.7				
REC	0	0	0	0	0	0	0	0	4.4	0.3	0	0	0	0	0	4.7				
REF. NO.	IC3212										IC3213									
MODE	1	2	3	4	5	6	7	8			1	2	3	4	5	6	7	8		
STOP	4.7	2.8	2.5	2.3	0	2.9	0	2.3			0.1	−0.1	0	−4.8	0	0	0.1	4.7		
REC	4.7	2.8	2.7	2.3	0	2.9	0	2.3			0.1	−0.1	0	−4.8	0	0	0.1	4.7		
REF. NO.	IC3214										IC3215									
MODE	I	G	O								I	G	O							
STOP	11.4	0	5.1								11.4	0	5.1							
REC	11.4	0	5.1								11.4	0	5.1							
REF. NO.	IC3216																			
MODE	1	2	3	4	5															
STOP	0.3	0.3	0	4.9	4.7															
REC	0.4	0.4	0	4.9	4.7															
REF. NO.	Q3201			Q3202			Q3203			Q3204			Q3205			Q3206				
MODE	E	C	B	E	C	B	E	C	B	E	C	B	E	C	B	E	C	B		
STOP	3.3	0	2.7	3.3	0	2.7	−0.6	4.7	0	2.2	4.7	2.8	0	0.1	0.6	0.3	4.7	0.6		
REC	3.3	0	2.7	3.3	0	2.7	−0.6	4.7	0	2.5	4.7	2.9	0	0.1	0.6	0.3	4.7	0.6		
REF. NO.	Q3207			Q3208			Q3209			Q3210			Q3211							
MODE	E	C	B	E	C	B	E	C	B	E	C	B	1	2	3	4	5			
STOP	0	4.7	0.3	0	0	0	1.6	3.5	2.4	2.3	0	1.6	0	0	0.4	0	0.3			
REC	0	4.7	0.3	0	0	0	1.6	3.5	2.4	2.3	1.6	0	0	0	0.4	0	0.3			
REF. NO.	Q3212																			
MODE	E	C	B																	
STOP	4.9	4.9	4.3																	
REC	4.9	4.9	4.3																	
REF. NO.	QR3201			QR3202			QR3203			QR3205			QR3206			QR3207				
MODE	E	C	B	E	C	B	E	C	B	E	C	B	E	C	B	E	C	B		
STOP	0	4.9	0	0	0	3.5	0.1	0.1	4.9	0	0	3.4	0	0	3.4	1.6	1.6	4.4		
REC	0	4.9	0	0	0	3.5	0.1	0.1	4.9	0	0	3.4	0	0	3.4	1.6	1.6	4.4		

IC3212
TK16031MTL

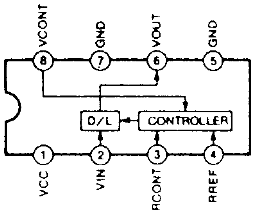

ies.

VIDEO YC-3 SCHEMATIC DIAGRAM 3/6 (E6: Page CBA-7)

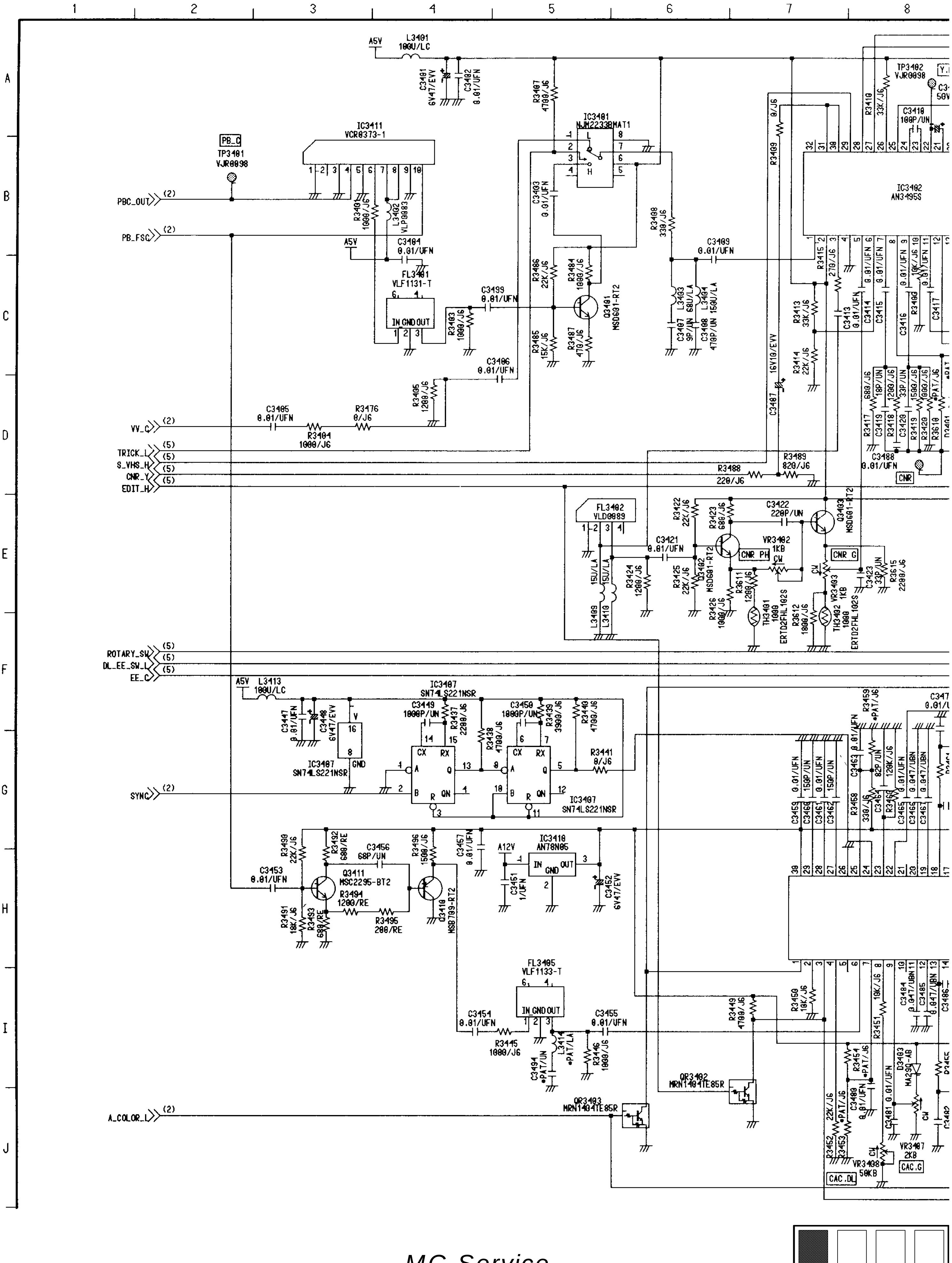

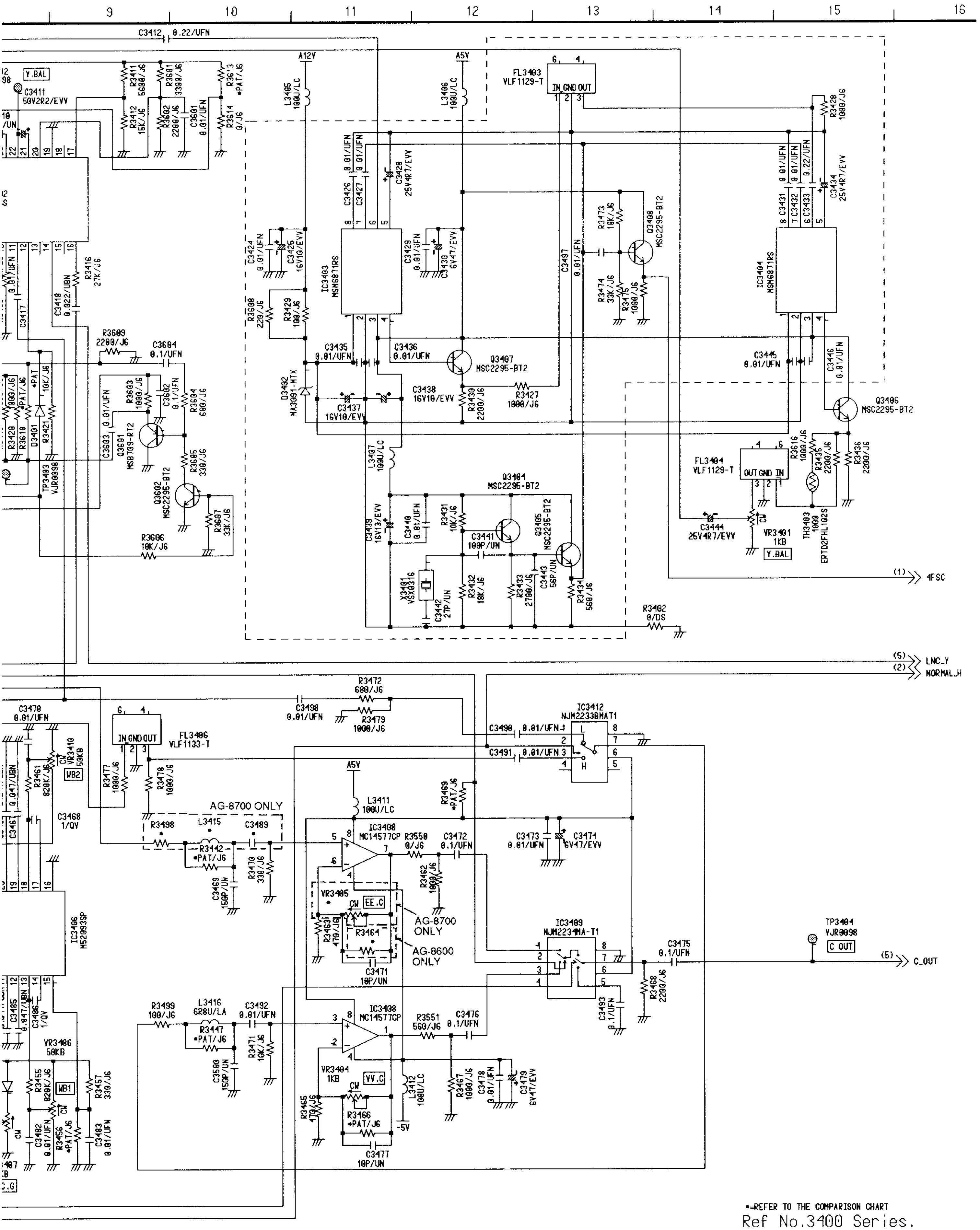

*=REFER TO THE COMPARISON CHART

Ref No.3400 Series.

IC3411
VCR0373

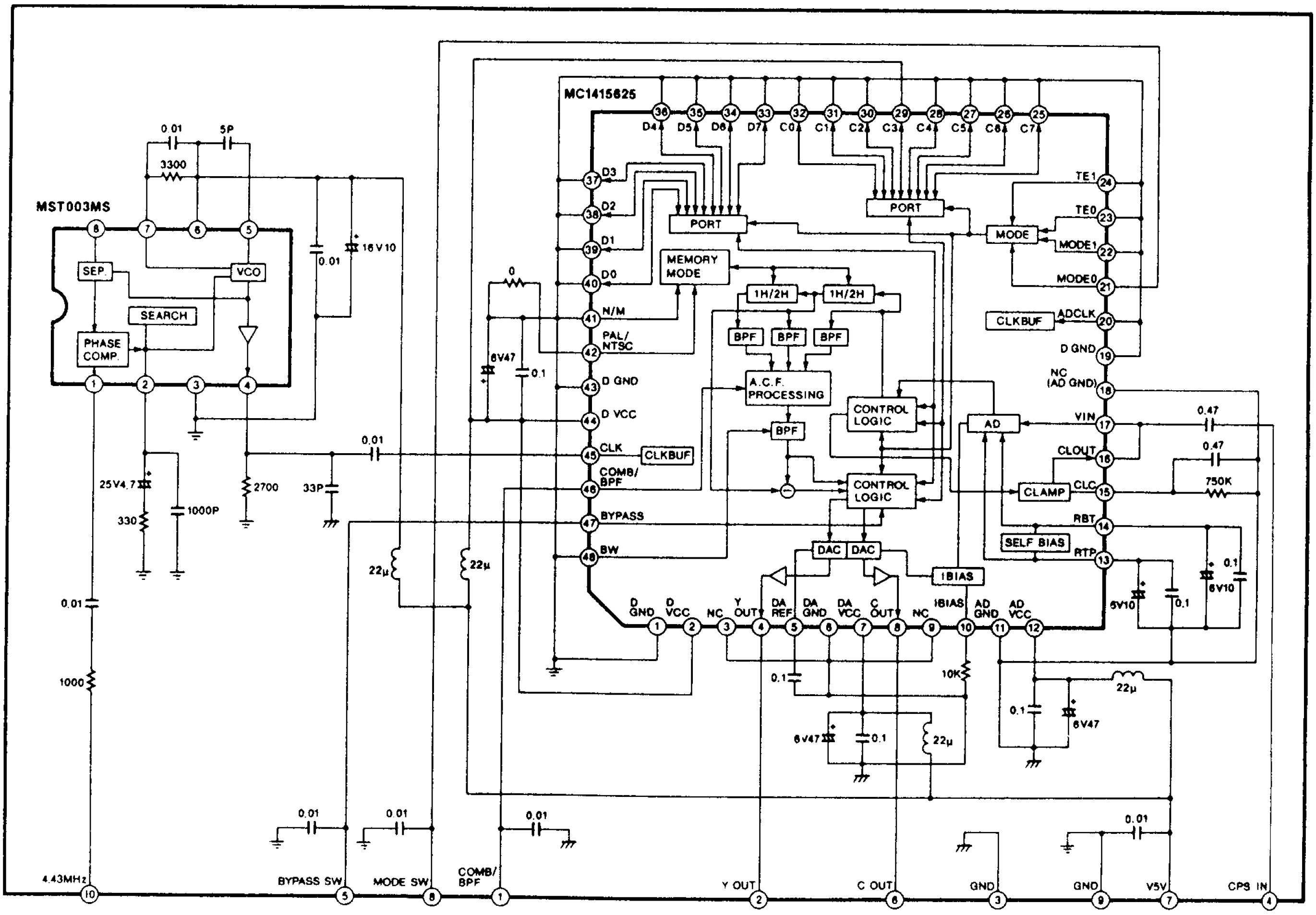

IC3402
AN3495S

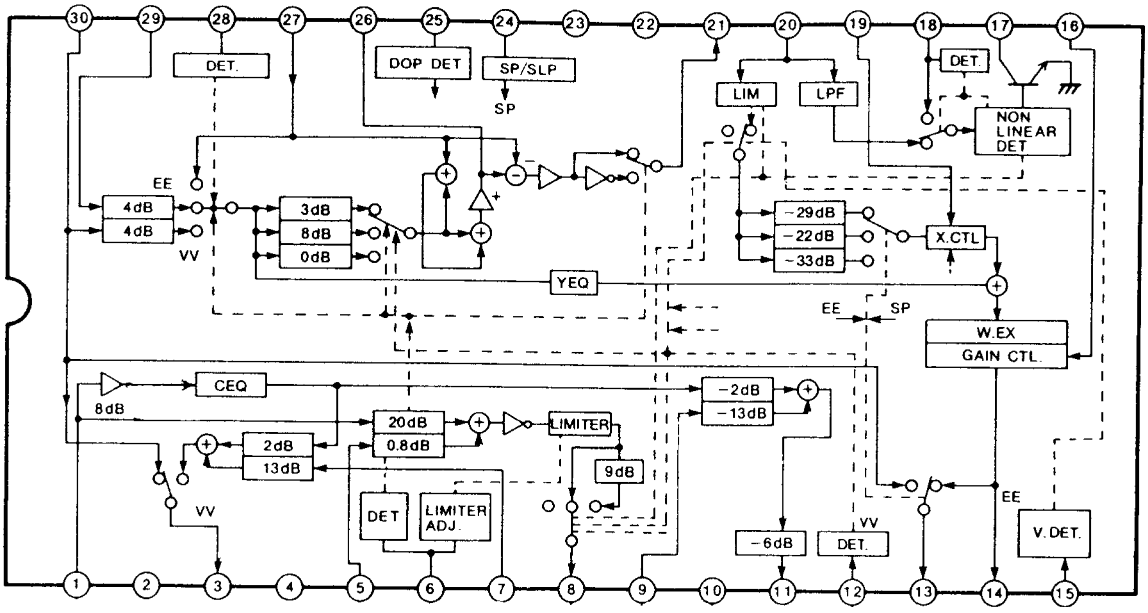

VIDEO YC-3 DC VOLTAGE CHART

REF. NO. / MODE																				
REF. NO.	IC3401																			
MODE	1	2	3	4	5	6	7	8												
STOP	2.8	3.4	2.8	0	0	4.7	2.0	0												
REC	2.8	3.4	2.8	0	0	4.7	2.0	0												
REF. NO.	IC3402																			
MODE	1	2	3	4	5	6	7	8	9	10	11	12	13	14	15	16	17	18	19	20
STOP	3.1	4.7	1.6	0	3.0	1.9	3.1	1.7	3.1	0	1.6	4.3	1.5	1.7	0	2.4	3.2	0	0	0
REC	3.0	4.7	1.5	0	3.0	1.9	3.1	1.7	3.1	0	1.6	4.3	1.5	1.7	0	2.4	3.2	0.1	0	0
REF. NO.	IC3402																			
MODE	21	22	23	24	25	26	27	28	29	30	31	32								
STOP	2.8	2.5	2.2	2.2	0	4.7	1.5	3.5	4.9	3.5	3.5	0								
REC	2.9	2.5	2.2	2.2	0	4.7	1.5	3.5	4.9	3.5	3.5	0								
REF. NO.	IC3403										IC3404									
MODE	1	2	3	4	5	6	7	8			1	2	3	4	5	6	7	8		
STOP	8.0	0	4.7	2.8	2.6	1.1	1.4	4.1			7.9	0	4.7	2.8	2.6	1.1	1.4	4.1		
REC	7.9	0	4.7	2.8	2.6	1.1	1.4	4.1			7.9	0	4.7	2.8	2.6	1.1	1.4	4.1		
REF. NO.	IC3406																			
MODE	1	2	3	4	5	6	7	8	9	10	11	12	13	14	15	16	17	18	19	20
STOP	3.0	1.5	0.1	0	0	3.0	2.5	4.0	1.7	0	4.2	3.7	3.0	2.2	5.0	0	2.2	3.0	4.2	3.7
REC	3.0	1.5	0.1	0	0	3.0	2.5	4.0	1.7	0	4.2	3.7	3.0	2.2	5.0	0	2.2	3.0	4.2	3.7
REF. NO.	IC3406																			
MODE	21	22	23	24	25	26	27	28	29	30										
STOP	0	2.4	2.7	0.3	5.0	0	4.0	2.5	4.0	5.0										
REC	0	2.4	2.8	0.3	5.0	0	4.0	2.5	4.0	5.0										
REF. NO.	IC3407																			
MODE	1	2	3	4	5	6	7	8	9	10	11	12	13	14	15	16				
STOP	0	0.4	4.9	3.9	0.3	4.6	0	0	0.2	4.9	4.9	3.9	0.2	4.7	1.2	4.9				
REC	0	0.4	4.9	4.0	0.3	4.6	0	0	0.2	4.9	4.9	3.9	0.2	4.7	1.2	4.9				
REF. NO.	IC3408										IC3409									
MODE	1	2	3	4	5	6	7	8			1	2	3	4	5	6	7	8		
STOP	0	0	0	−4.8	0	0	0	4.7			2.8	0	2.8	0.1	2.8	4.7	2.1	0		
REC	0	0	0	−4.8	0	0	0	4.7			2.8	0	2.8	0.1	2.8	4.7	2.1	0		
REF. NO.	IC3410										IC3411									
MODE	I	G	O								1	2	3	4	5	6	7	8	9	10
STOP	11.4	0	5.0								0	0.9	0	0.1	0	0.9	4.9	4.9	0	0
REC	11.4	0	5.0								0	0.9	0	0.1	0	0.9	4.9	4.9	0	0
REF. NO.	IC3412																			
MODE	1	2	3	4	5	6	7	8												
STOP	2.8	0	2.8	0	0	4.7	2.0	0												
REC	2.8	0	2.8	0	0	4.7	2.0	0												
REF. NO.	Q3401			Q3402			Q3403			Q3404			Q3405			Q3406				
MODE	E	C	B	E	C	B	E	C	B	E	C	B	E	C	B	E	C	B		
STOP	1.2	2.1	1.8	1.6	3.0	2.2	1.0	4.7	1.6	2.3	4.7	3.1	2.0	4.6	2.3	2.1	4.7	2.8		
REC	1.2	2.2	1.8	1.6	3.0	2.2	1.0	4.7	1.6	2.3	4.7	3.1	2.0	4.7	2.3	2.1	4.7	2.8		
REF. NO.	Q3407			Q3408			Q3410			Q3411										
MODE	E	C	B	E	C	B	E	C	B	E	C	B								
STOP	2.1	4.7	2.8	2.9	4.7	3.4	2.0	0	1.3	1.3	3.7	2.1								
REC	2.1	4.7	2.8	2.9	4.7	3.4	2.0	0	1.3	1.3	3.7	2.1								
REF. NO.	QR3402			QR3403																
MODE	E	C	B	E	C	B														
STOP	0	0	4.9	0	3.0	0														
REC	0	0	4.9	0	3.0	0														

IC3403,3404
MSM6871RS

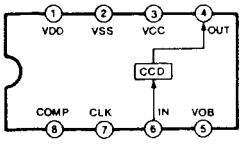

VIDEO YC-4 SCHEMATIC DIAGRAM 4/6 (E6: Page CBA-7)

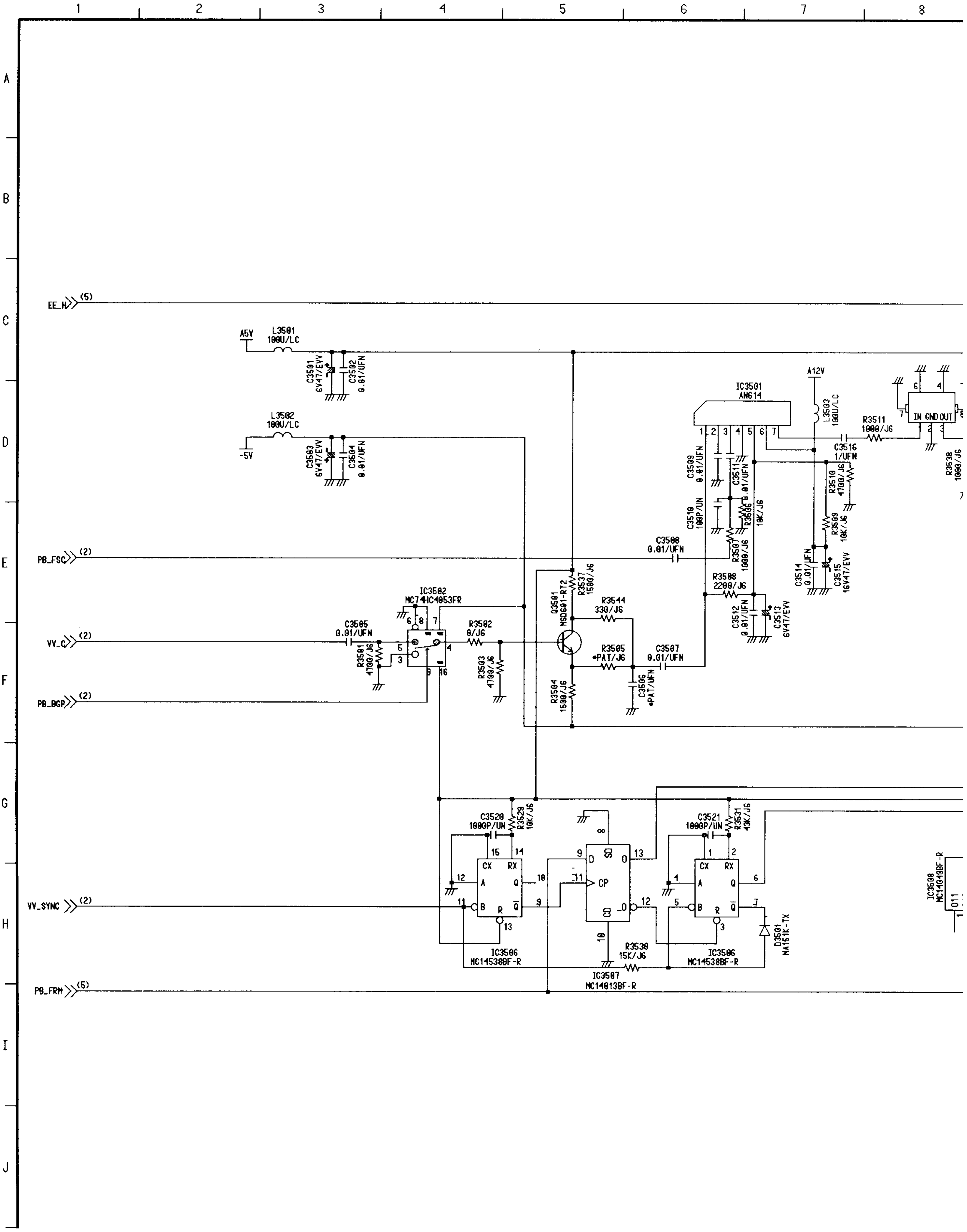

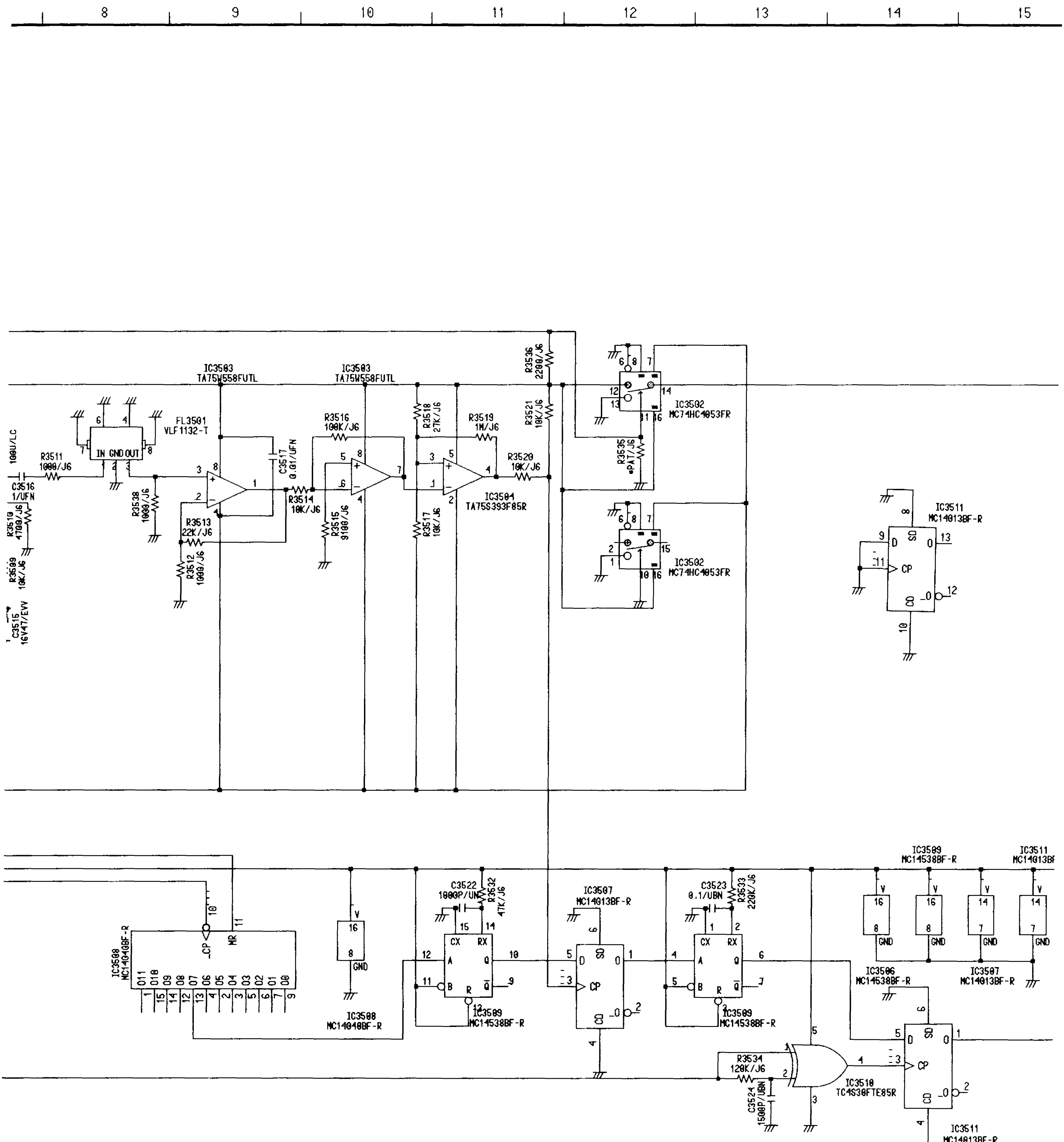

8
9
10
11
12
13
14
15
IC3503
TA75W558FUTL
IC3504
TA75S393F85R
IC3502
MC74HC4053FR
FL3501
VLF1132-T
IC3511
MC14013BF-R
IC3508
MC14040BF-R
IC3509
MC14538BF-R
IC3507
MC14013BF-R
IC3506
MC14538BF-R
IC3510
TC4S30FTE85R

Ref No.3500 S

VIDEO YC-4 DC VOLTAGE CHART

REF. NO.	IC3501									
MODE	1	2	3	4	5	6	7			
STOP	3.7	4.2	4.2	0	3.7	11.4	7.6			
REC	3.7	4.2	4.2	0	3.7	11.4	7.6			
REF. NO.	IC3502									
MODE	1	2	3	4	5	6	7	8	9	10
STOP	0	0	0	0	0	0	−4.9	0	4.3	0
REC	0	0	0	0	0	0	−4.9	0	4.4	0
REF. NO.	IC3502									
MODE	11	12	13	14	15	16				
STOP	4.9	4.9	0	0	0	4.9				
REC	4.9	4.9	0	0	0	4.9				
REF. NO.	IC3503									
MODE	1	2	3	4	5	6	7	8		
STOP	0	0	0	−4.9	0	0	−0.2	4.9		
REC	0	0	0	−4.9	0	0	−0.2	4.9		
REF. NO.	IC3504									
MODE	1	2	3	4	5					
STOP	−0.2	−4.9	−2.2	−4.7	4.9					
REC	−0.2	−4.9	−2.2	−4.8	4.9					
REF. NO.	IC3506									
MODE	1	2	3	4	5	6	7	8	9	10
STOP	0	3.4	2.4	0	2.9	1.8	3.1	0	3.8	1.1
REC	0	3.4	2.4	0	3.0	1.8	3.1	0	3.8	1.1
REF. NO.	IC3506									
MODE	11	12	13	14	15	16				
STOP	4.5	0	4.9	3.8	0	4.9				
REC	4.5	0	4.9	3.8	0	4.9				
REF. NO.	IC3507									
MODE	1	2	3	4	5	6	7	8	9	10
STOP	0	4.7	0.1	0	0	0	0	0	2.5	0
REC	0	4.9	0.1	0	0	0	0	0	2.5	0
REF. NO.	IC3507									
MODE	11	12	13	14						
STOP	3.8	2.4	2.4	4.7						
REC	3.8	2.4	2.4	4.9						
REF. NO.	IC3508									
MODE	1	2	3	4	5	6	7	8	9	10
STOP	0	1.2	1.1	0.9	1.2	1.2	1.2	0	1.2	1.8
REC	0	1.2	1.2	1.0	1.2	1.2	1.2	0	1.2	1.8
REF. NO.	IC3508									
MODE	11	12	13	14	15	16				
STOP	2.4	0.4	1.0	0	0	4.9				
REC	2.4	0.4	1.0	0	0	4.9				
REF. NO.	IC3509									
MODE	1	2	3	4	5	6	7	8	9	10
STOP	0	2.7	4.9	0	4.9	2.7	2.2	0	4.9	0
REC	0	2.7	4.9	0	4.9	2.7	2.2	0	4.9	0
REF. NO.	IC3509									
MODE	11	12	13	14	15	16				
STOP	4.9	1.0	4.9	4.9	0	4.9				
REC	4.9	1.0	4.9	4.8	0	4.9				
REF. NO.	IC3510									
MODE	1	2	3	4	5					
STOP	2.5	2.5	0	0	4.9					
REC	2.5	2.5	0	0	4.9					
REF. NO.	IC3511									
MODE	1	2	3	4	5	6	7	8	9	10
STOP	2.4	2.4	0	0	2.7	0	0	0	0	0
REC	2.4	2.4	0	0	2.7	0	0	0	0	0
REF. NO.	IC3511									
MODE	11	12	13	14						
STOP	0	0	4.9	4.9						
REC	0	0	4.9	4.9						
REF. NO.	Q3501									
MODE	E	C	B							
STOP	−0.6	0.6	0							
REC	−0.6	0.6	0							

3500 Series.

VIDEO YC COMPARISON CHART 6/6 (E6: Page CBA-7)

REF	AG-8700	AG-8600
C3002	*PAT/UN	*PAT/UN
C3081	6V47/EVV	*PAT/EVV
C3082	6V47/EVV	*PAT/EVV
C3090	*PAT/UN	*PAT/UN
C3098	*PAT/UN	*PAT/UN
C3099	*PAT/UN	*PAT/UN
C3111	*PAT/UN	*PAT/UN
C3201	*PAT/UN	*PAT/UN
C3232	*PAT/UBN	*PAT/UBN
C3238	*PAT/UN	*PAT/UN
C3247	6P/UN	*PAT/UN
C3272	*PAT/UN	*PAT/UN
C3280	*PAT/UN	*PAT/UN
C3489	0. 01/UFN	*PAT/UFN
C3494	*PAT/UN	*PAT/UN
C3506	*PAT/UFN	*PAT/UFN
D3401	*PAT	*PAT
L3010	*PAT/LA	*PAT/LA
L3205	*PAT/LA	*PAT/LA
L3414	*PAT/LA	*PAT/LA
L3415	6R8U/LA	*PAT/LA
P3601	VJS2848D018	*PAT
P3602	VJS2848D018	*PAT
P3603	VJP1233T	*PAT
QR3004	*PAT	*PAT
QR3005	*PAT	*PAT
QR3205	*PAT	*PAT
R3016	0/J6	*PAT/J6
R3023	3900/J6	*PAT/J6
R3046	*PAT/J6	*PAT/J6
R3049	*PAT/J6	*PAT/J6
R3059	*PAT/J6	*PAT/J6
R3060	*PAT/J6	*PAT/J6
R3073	3900/J6	*PAT/J6
R3074	6800/J6	*PAT/J6
R3076	*PAT/J6	*PAT/J6
R3100	*PAT/J6	*PAT/J6
R3101	*PAT/J6	*PAT/J6
R3108	*PAT/J6	*PAT/J6
R3109	*PAT/J6	*PAT/J6
R3110	*PAT/J6	*PAT/J6
R3111	*PAT/J6	*PAT/J6
R3112	*PAT/J6	10K/J6
R3207	*PAT/J6	*PAT/J6
R3217	*PAT/J6	*PAT/J6
R3283	*PAT/J6	*PAT/J6

REF	AG-8700	AG-8600
R3294	*PAT/J6	*PAT/J6
R3442	*PAT/J6	*PAT/J6
R3447	*PAT/J6	*PAT/J6
R3453	*PAT/J6	*PAT/J6
R3454	*PAT/J6	*PAT/J6
R3456	*PAT/J6	*PAT/J6
R3459	*PAT/J6	*PAT/J6
R3464	*PAT/J6	0/J6
R3466	*PAT/J6	*PAT/J6
R3469	*PAT/J6	*PAT/J6
R3498	100/J6	*PAT/J6
R3505	*PAT/J6	*PAT/J6
R3535	*PAT/J6	*PAT/J6
R3552	*PAT/J6	*PAT/J6
R3610	*PAT/J6	*PAT/J6
R3613	*PAT/J6	*PAT/J6
TH3001	*PAT	*PAT
TP3003	VJR0098	*PAT
TP3005	VJR0098	*PAT
VC3202	ECV1ZW20X60	*PAT
VR3001	5KB	*PAT
VR3002	5KB	*PAT
VR3007	5KB	*PAT
VR3201	100KB	*PAT
VR3405	1KB	*PAT

VIDEO YC-5 SCHEMATIC DIAGRAM 5/6 (E6: Page CBA-7)

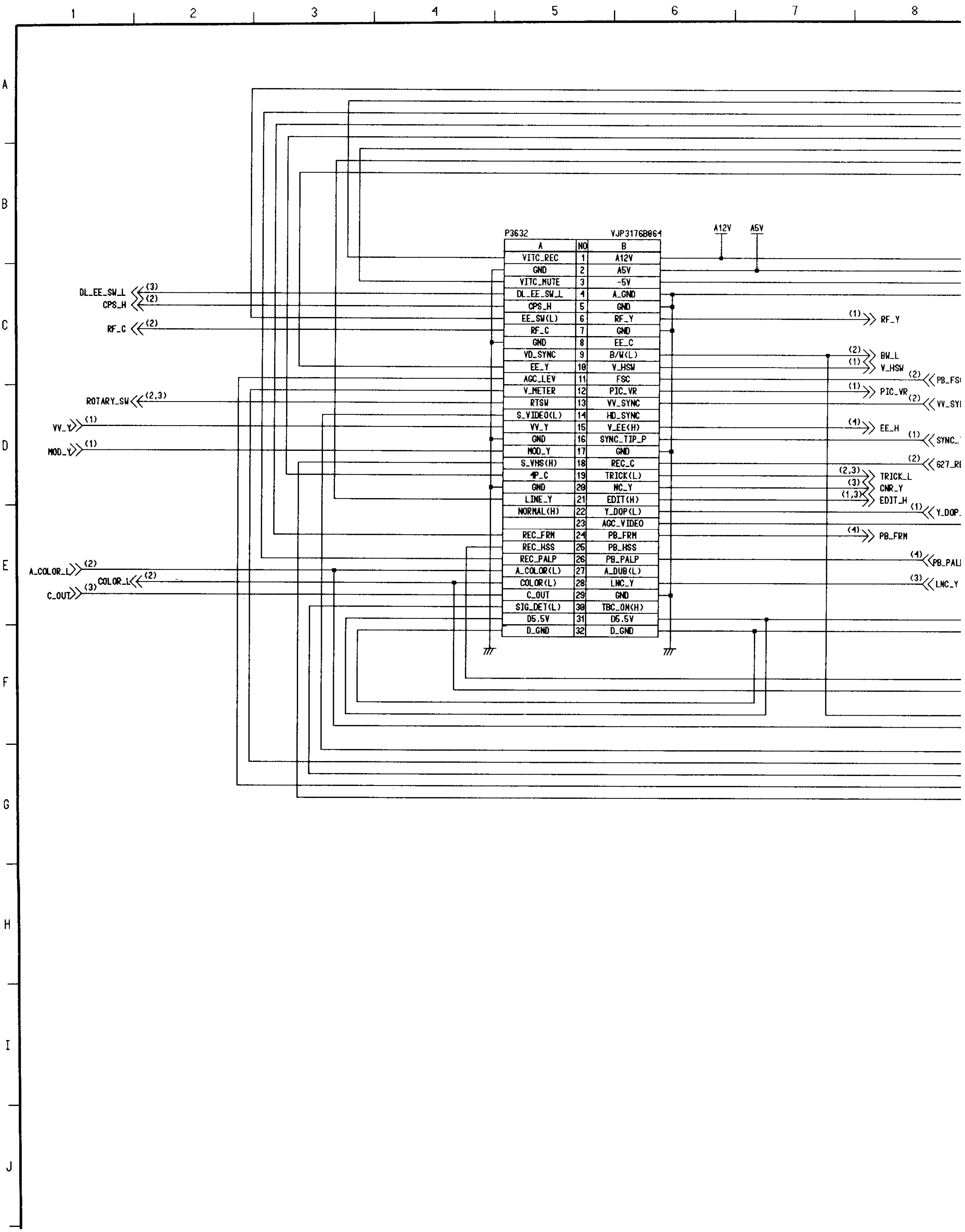

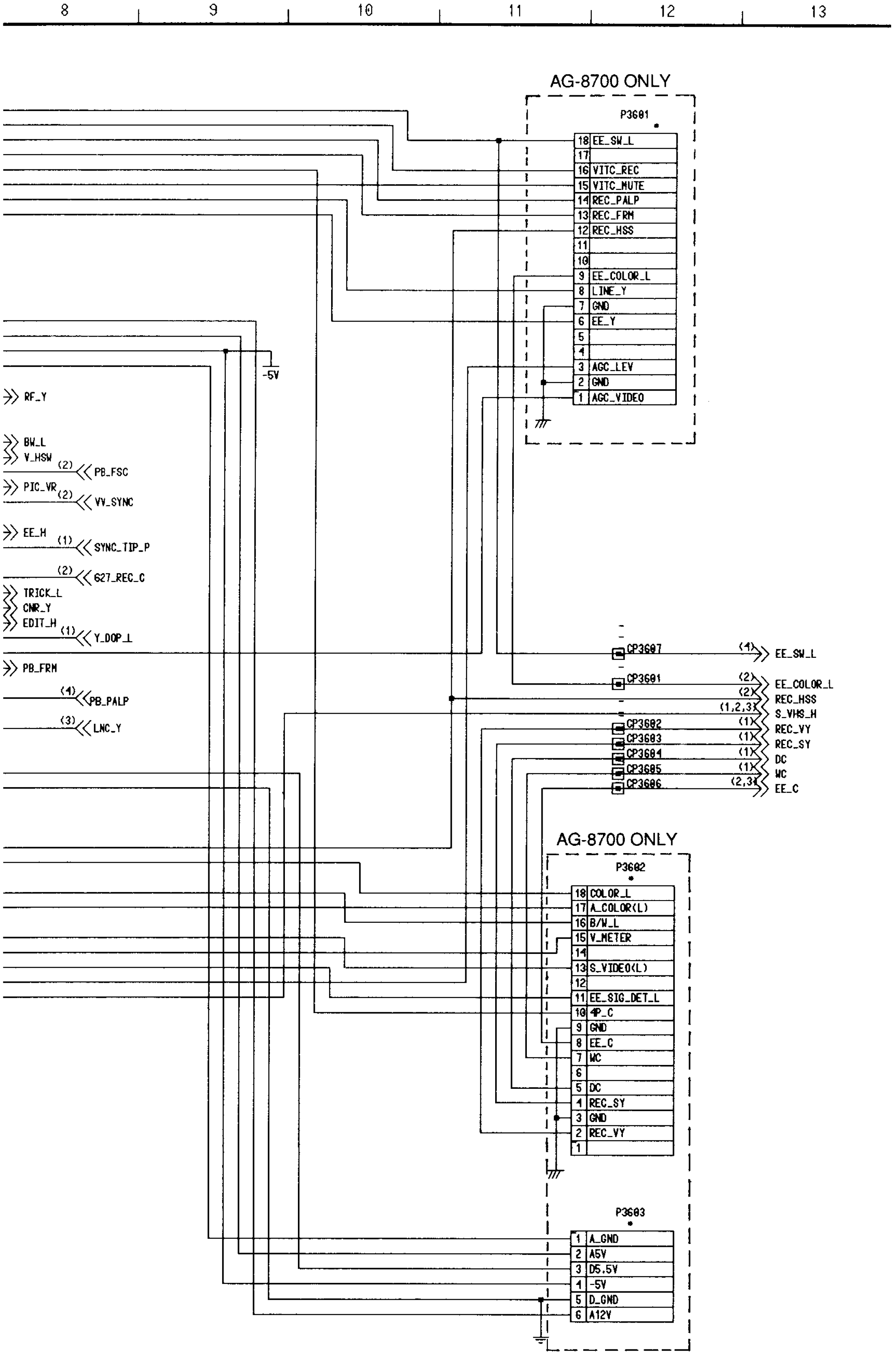
8
9
10
11
12
13
AG-8700 ONLY
P3601
18 EE_SW_L
17
16 VITC_REC
15 VITC_MUTE
14 REC_PALP
13 REC_FRM
12 REC_HSS
11
10
9 EE_COLOR_L
8 LINE_Y
7 GND
6 EE_Y
5
4
3 AGC_LEV
2 GND
1 AGC_VIDEO
-5V
RF_Y
BW_L
V_HSW
(2) PB_FSC
PIC_VR
(2) VV_SYNC
EE_H
(1) SYNC_TIP_P
(2) 627_REC_C
TRICK_L
CNR_Y
EDIT_H
(1) Y_DOP_L
PB_FRM
(4) PB_PALP
(3) LNC_Y
CP3607
(4) EE_SW_L
CP3601
(2) EE_COLOR_L
(2) REC_HSS
(1,2,3) S_VHS_H
CP3602
(1) REC_VY
CP3603
(1) REC_SY
CP3604
(1) DC
CP3605
(1) WC
CP3606
(2,3) EE_C
AG-8700 ONLY
P3602
18 COLOR_L
17 A_COLOR(L)
16 B/W_L
15 V_METER
14
13 S_VIDEO(L)
12
11 EE_SIG_DET_L
10 4P_C
9 GND
8 EE_C
7 WC
6
5 DC
4 REC_SY
3 GND
2 REC_VY
1
P3603
1 A_GND
2 A5V
3 D5.5V
4 -5V
5 D_GND
6 A12V

YC REC-2 SCHEMATIC DIAGRAM 2/6 (E13: A

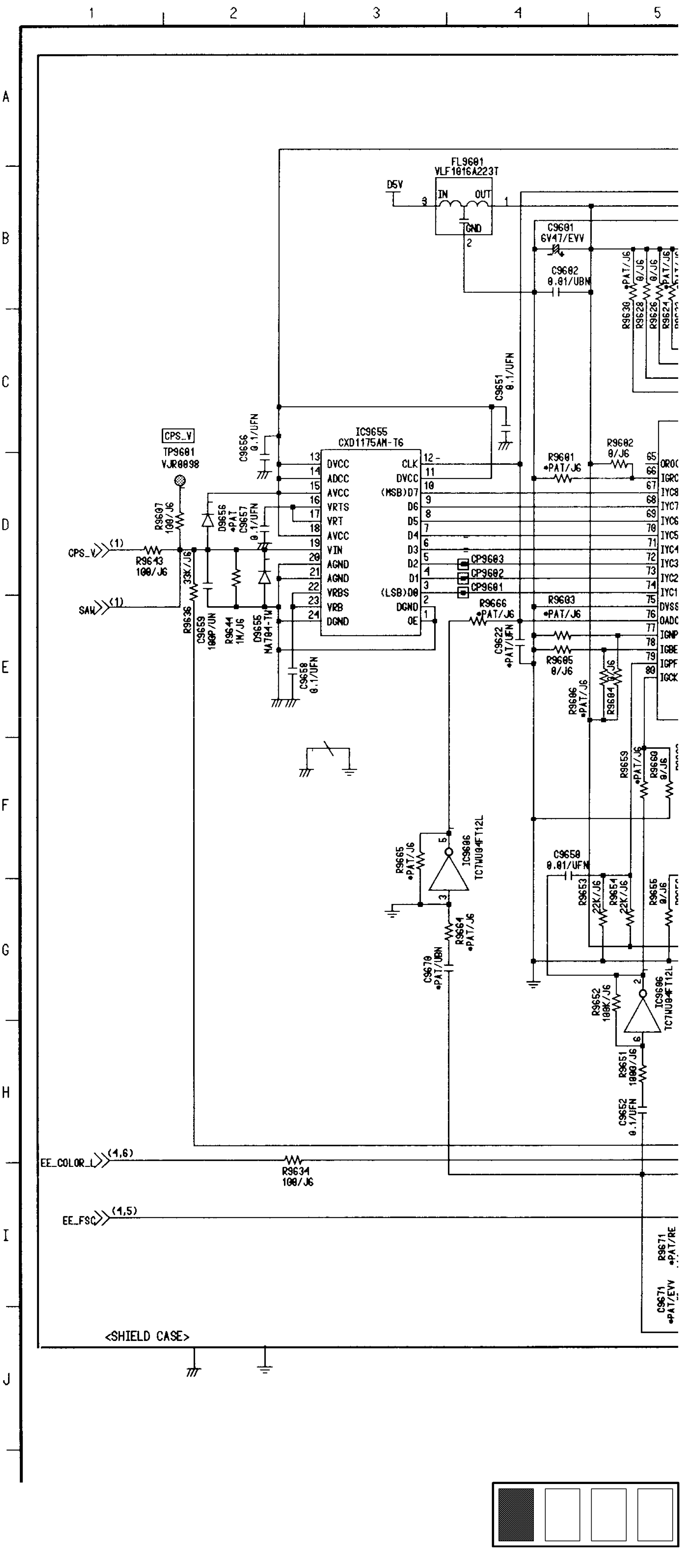

ATIC DIAGRAM 2/6 (E13: AG-8700 0NLY/Page CBA-6)

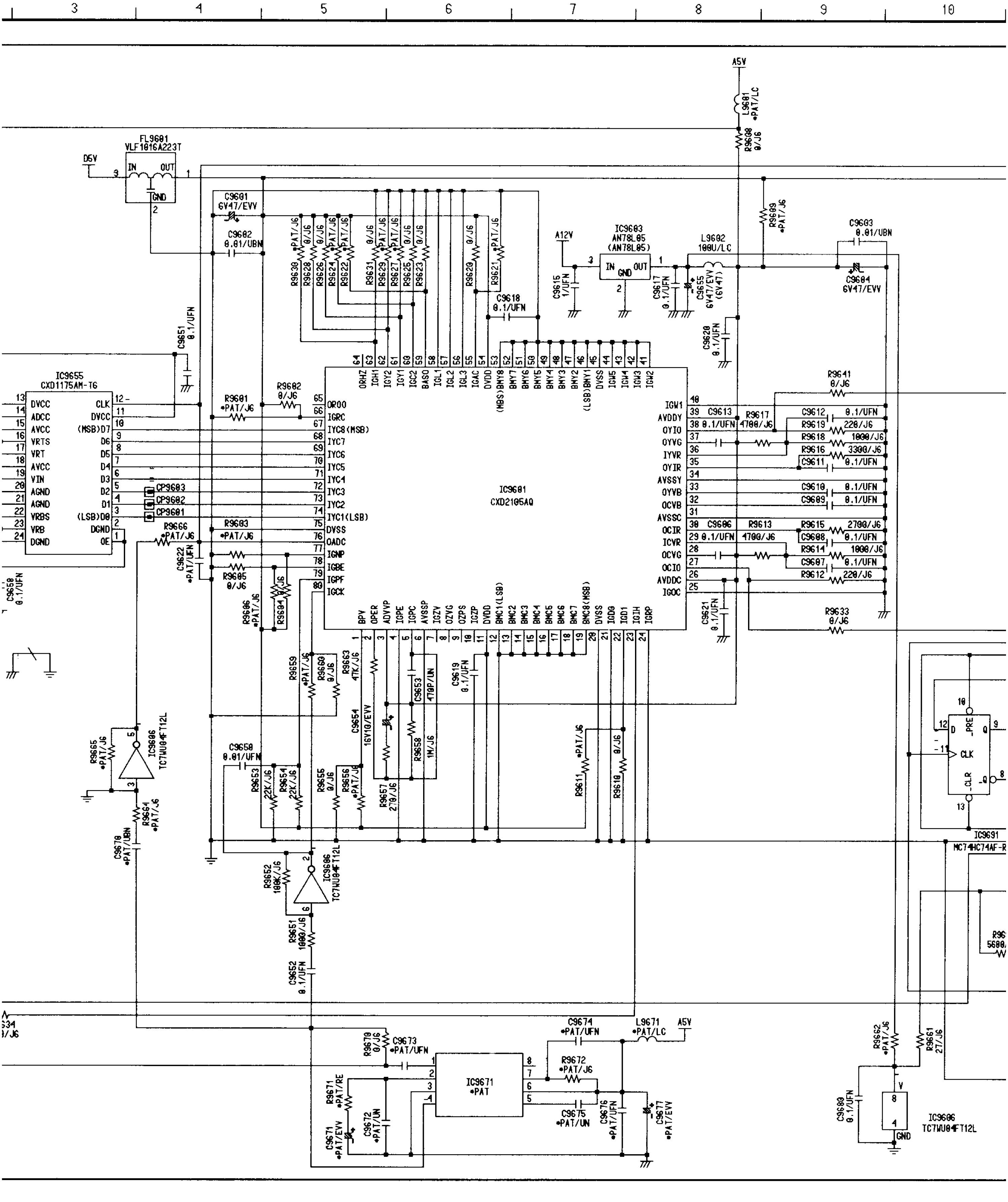

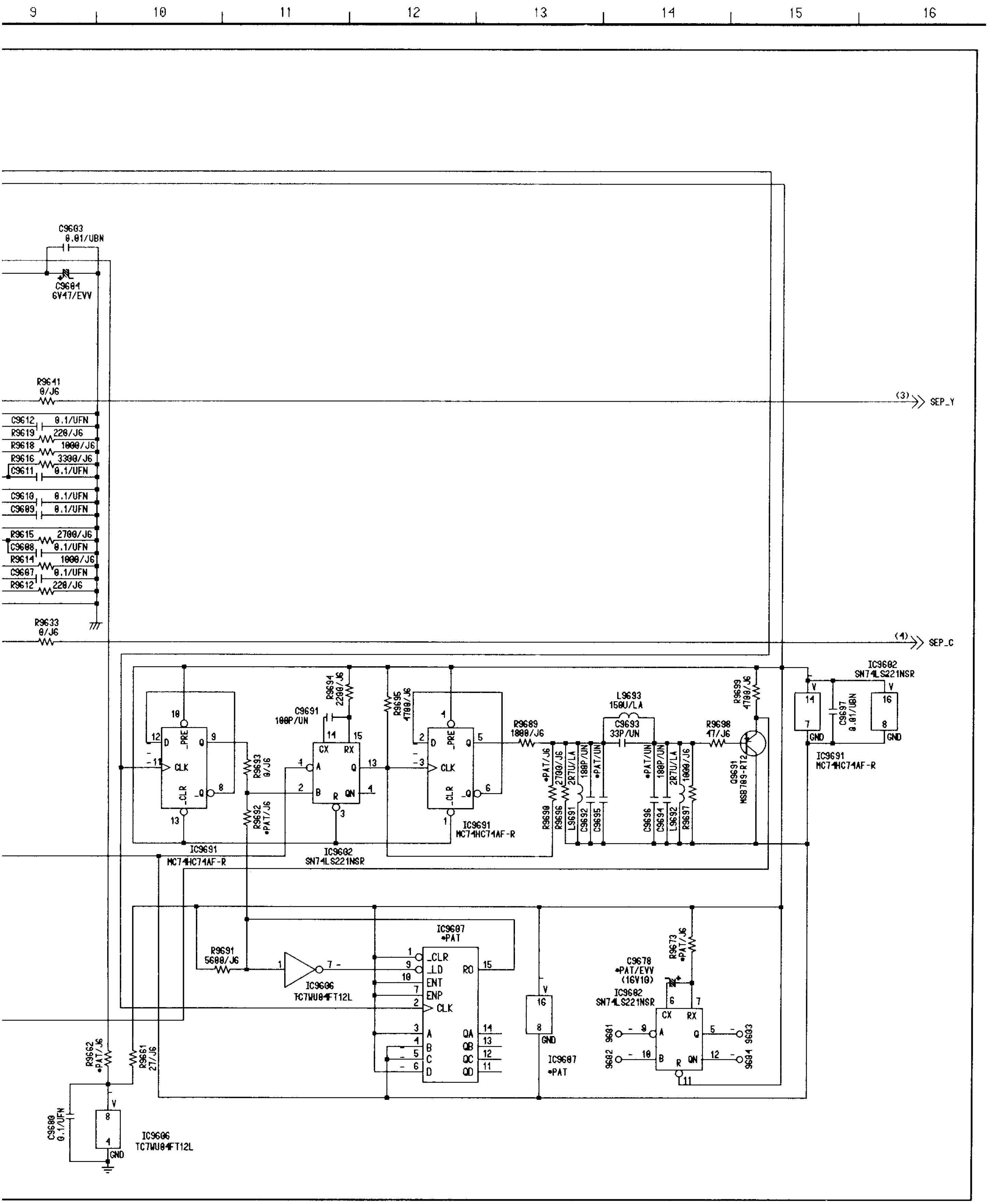

*PAT=PATTERN ONLY
*=REFER TO THE COMPARISON CHART

Ref No.9601~9699 Series

YC REC-2 DC VOLTAGE CHART

IC9601
CXD2105AQ

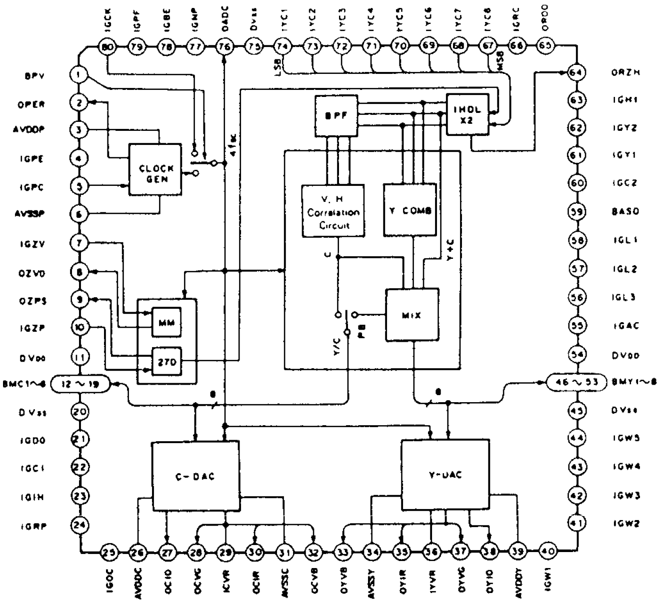

IC9655
CXD1175AM

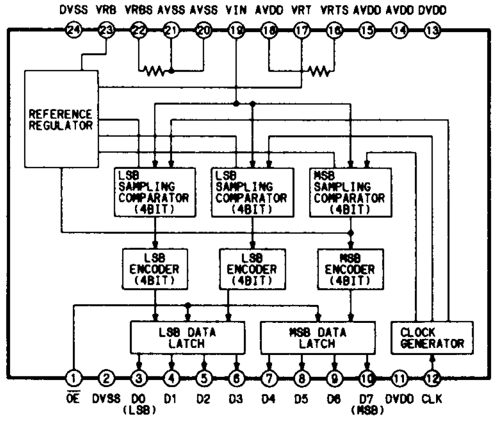

REF. NO.	IC9601									
MODE	1	2	3	4	5	6	7	8	9	10
STOP	0	1.7	4.9	0.1	1.8	0.1	0	0	0	0
REC	0	1.7	4.9	0.1	1.8	0.1	0	0	0	0
REF. NO.	IC9601									
MODE	11	12	13	14	15	16	17	18	19	20
STOP	4.9	0	0	0	0	0	0	0	0	0
REC	4.9	0	0	0	0	0	0	0	0	0
REF. NO.	IC9601									
MODE	21	22	23	24	25	26	27	28	29	30
STOP	0	0	0.1	0	0	4.9	0.5	3.4	0.8	0.9
REC	0	0	0.1	0	0	4.9	0.5	3.4	0.8	0.9
REF. NO.	IC9601									
MODE	31	32	33	34	35	36	37	38	39	40
STOP	0	0.4	0.4	0	0.9	0.8	3.5	0.4	4.9	0
REC	0	0.4	0.4	0	0.9	0.8	3.5	0.4	4.9	0
REF. NO.	IC9601									
MODE	41	42	43	44	45	46	47	48	49	50
STOP	0	0	0	0	0	0	0	0	0	0
REC	0	0	0	0	0	0	0	0	0	0
REF. NO.	IC9601									
MODE	51	52	53	54	55	56	57	58	59	60
STOP	0	0	0	5.1	5.1	0	0	0	0	0
REC	0	0	0	5.1	5.1	0	0	0	0	0
REF. NO.	IC9601									
MODE	61	62	63	64	65	66	67	68	69	70
STOP	5.1	5.1	0	0	0	5.1	1.6	2.8	1.1	2.7
REC	5.1	5.1	0	0	0	5.1	1.6	2.9	1.0	2.8
REF. NO.	IC9601									
MODE	71	72	73	74	75	76	77	78	79	80
STOP	1.5	2.1	1.2	1.2	0	1.2	5.1	0	2.4	0
REC	1.6	2.1	1.3	1.2	0	1.2	5.1	0	2.4	0
REF. NO.	IC9602									
MODE	1	2	3	4	5	6	7	8	9	10
STOP	0	2.2	4.9	0.4	0.1	5.1	0.4	0	1.4	0.8
REC	0	2.2	4.9	0.4	0.1	5.1	0.3	0	1.4	0.8
REF. NO.	IC9602									
MODE	11	12	13	14	15	16				
STOP	5.1	0.1	2.1	1.6	1.2	5.1				
REC	5.1	0.1	2.1	1.6	1.2	5.1				
REF. NO.	IC9603									
MODE	1	2	3							
STOP	5.1	0	11.4							
REC	5.1	0	11.4							
REF. NO.	IC9606									
MODE	1	2	3	4	5	6	7	8		
STOP	5.1	2.5	0	0	4.9	2.5	0	4.9		
REC	5.1	2.5	0	0	4.9	2.5	0	4.9		
REF. NO.	IC9655									
MODE	1	2	3	4	5	6	7	8	9	10
STOP	0	0	1.2	1.1	2.1	1.4	2.7	1.1	2.8	1.6
REC	0	0	1.2	1.5	2.1	1.7	2.8	1.0	2.8	1.6
REF. NO.	IC9655									
MODE	11	12	13	14	15	16	17	18	19	20
STOP	4.9	1.2	4.9	4.9	0	2.7	2.7	4.9	1.6	0
REC	4.9	1.1	4.9	4.9	0	2.7	2.7	4.9	1.6	0
REF. NO.	IC9655									
MODE	21	22	23	24						
STOP	0	0.6	0.6	0						
REC	0	0.6	0.6	0						
REF. NO.	IC9691									
MODE	1	2	3	4	5	6	7	8	9	10
STOP	4.9	2.5	2.1	4.9	2.4	2.5	0	2.1	2.2	5.1
REC	4.9	2.5	2.1	4.9	2.4	2.5	0	2.1	2.2	5.1
REF. NO.	IC9691									
MODE	11	12	13	14						
STOP	1.2	2.1	5.1	5.1						
REC	1.2	2.1	5.1	5.1						
REF. NO.	Q9691									
MODE	E	C	B							
STOP	0.5	0	0							
REC	0.5	0	0							

YC REC-1 SCHEMATIC DIAGRAM 1/6 (E13: AG-8700 0NLY/Page CBA-6)

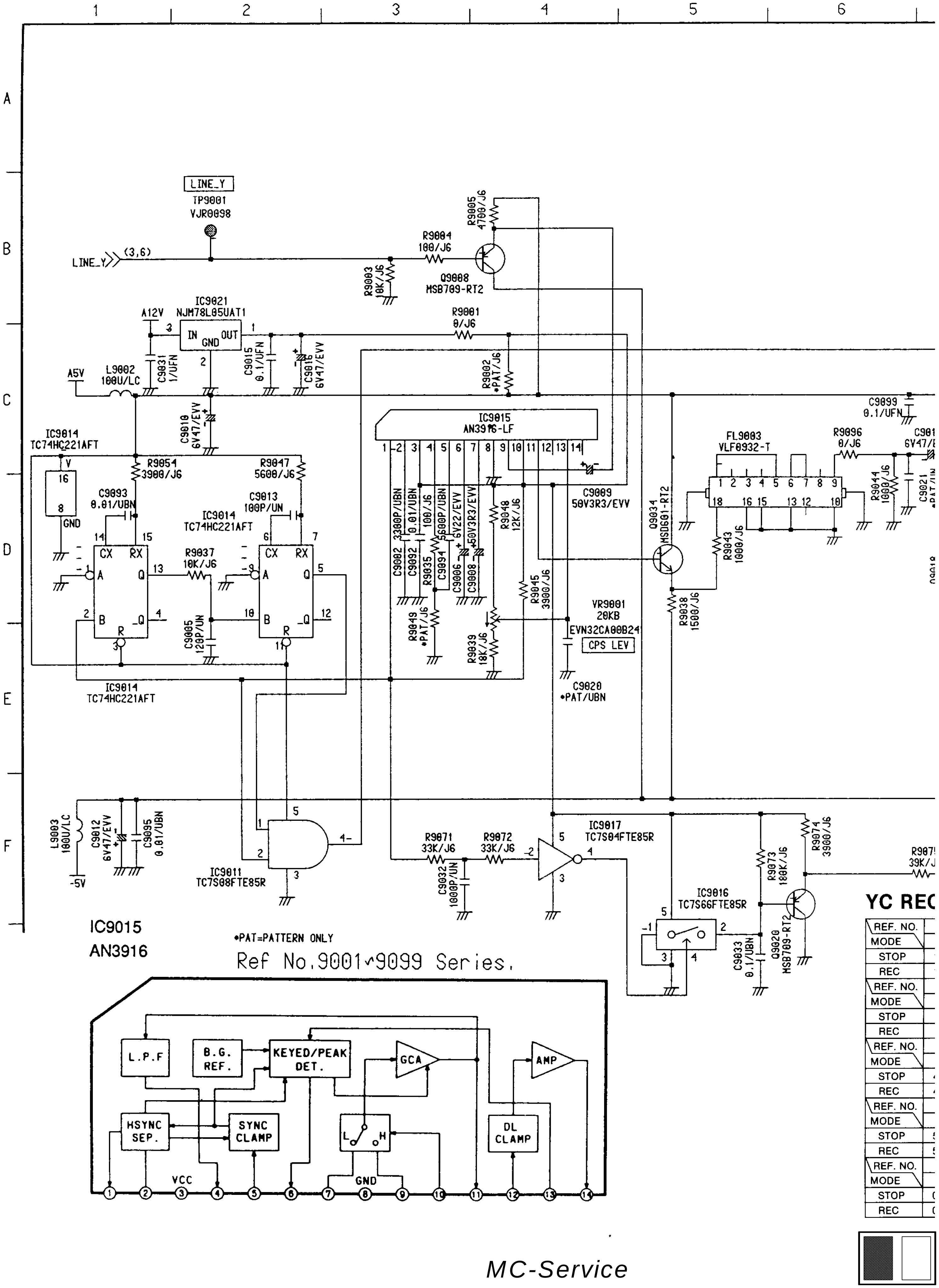

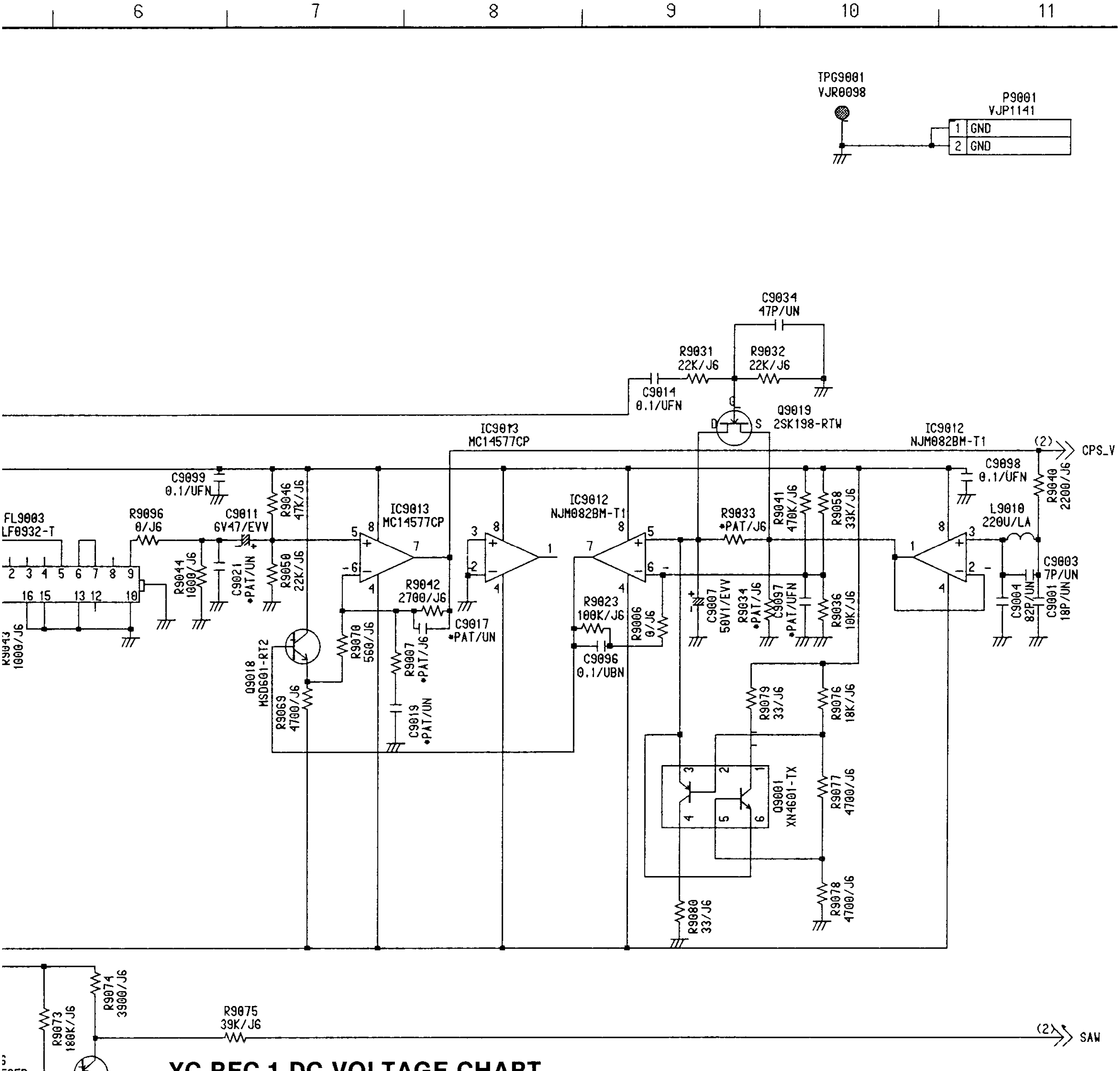

YC REC-1 DC VOLTAGE CHART

REF. NO.	IC9012										IC9013									
MODE	1	2	3	4	5	6	7	8			1	2	3	4	5	6	7	8		
STOP	1.6	1.6	1.6	−4.8	1.3	0	2.1	4.7			1.2	0	0	−4.8	1.5	1.5	1.6	4.7		
REC	1.6	1.6	1.6	−4.8	1.3	0	2.1	4.7			1.2	0	0	−4.8	1.5	1.5	1.6	4.7		
REF. NO.	IC9014																			
MODE	1	2	3	4	5	6	7	8	9	10	11	12	13	14	15	16				
STOP	0	4.7	4.9	1.9	0.1	0	4.8	0	0	3.0	4.9	4.8	3.0	0	3.4	4.9				
REC	0	4.7	4.9	1.9	0.1	0	4.8	0	0	3.0	4.9	4.8	3.0	0	3.4	4.9				
REF. NO.	IC9015																			
MODE	1	2	3	4	5	6	7	8	9	10	11	12	13	14						
STOP	4.7	3.0	5.1	2.0	1.7	2.2	3.0	0	2.9	5.1	2.8	3.0	2.3	1.6						
REC	4.7	3.0	5.1	2.0	1.7	2.2	3.0	0	2.9	5.1	2.8	3.0	2.3	1.6						
REF. NO.	IC9021																			
MODE	O	G	I																	
STOP	5.1	0	11.4																	
REC	5.1	0	11.4																	
REF. NO.	Q9008			Q9018			Q9019													
MODE	E	C	B	E	C	B	S	G	D											
STOP	0.6	−4.8	0	1.5	4.7	2.1	1.6	0	1.3											
REC	0.6	−4.8	0	1.5	4.9	2.2	1.6	0	1.3											

YC REC-3 SCHEMATIC DIAGRAM 3/6 (E13: AG-8700 0NLY/Page CBA-6)

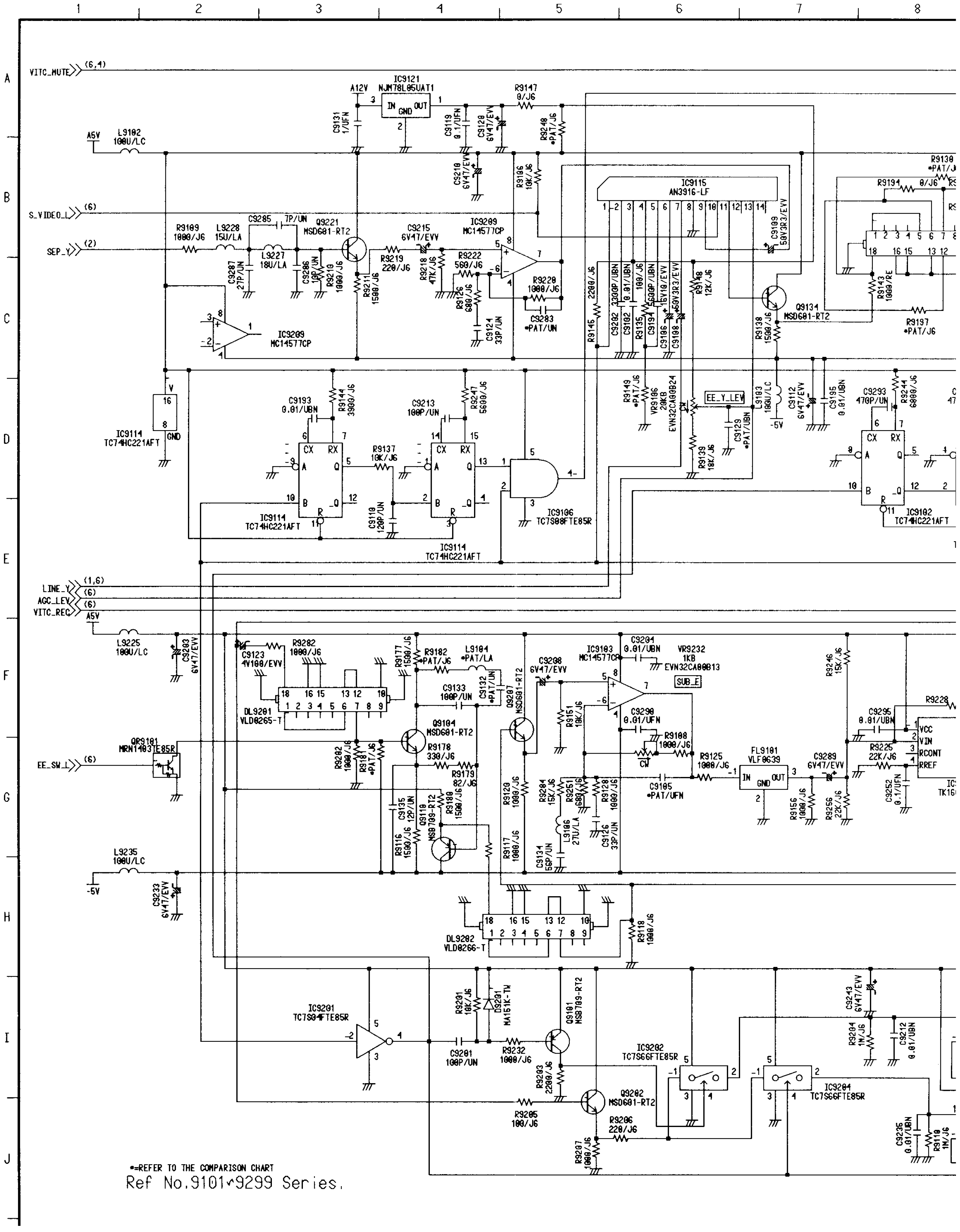

CBA-6)

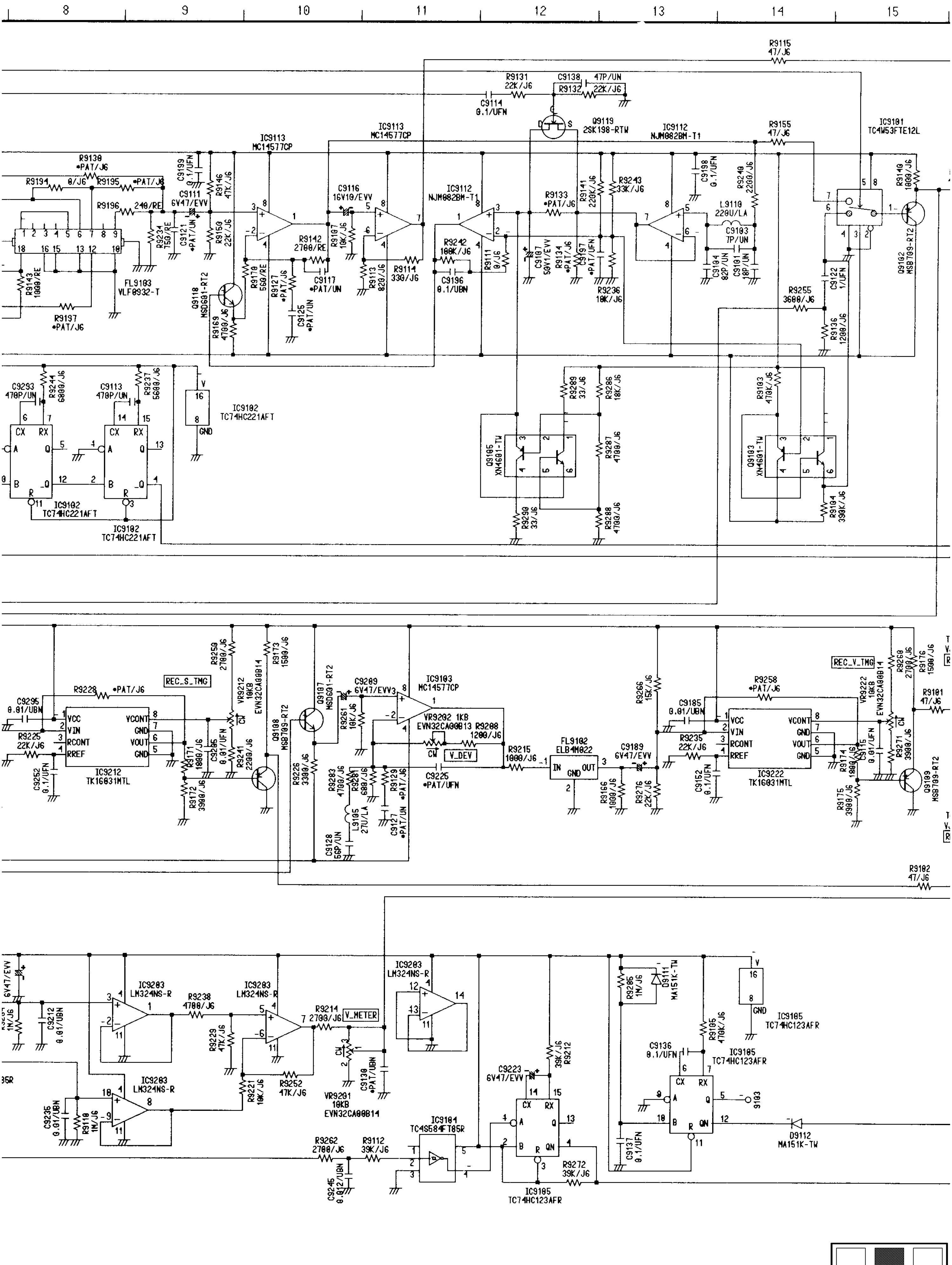

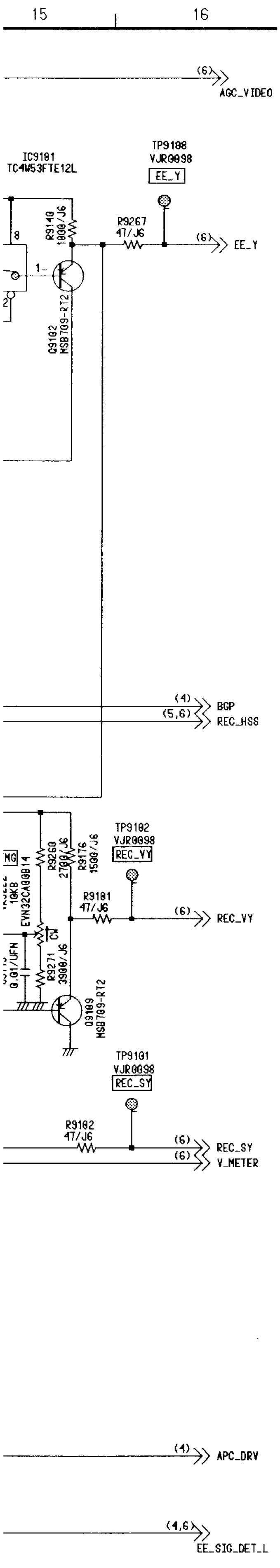

YC REC-3 DC VOLTAGE CHART

REF. NO.	IC9101																	
MODE	1	2	3	4	5	6	7	8										
STOP	1.4	0	−4.6	0	0	1.2	1.4	4.6										
REC	1.4	0	−4.6	0	0.2	1.2	1.4	4.6										
REF. NO.	IC9102																	
MODE	1	2	3	4	5	6	7	8	9	10	11	12	13	14	15	16		
STOP	0	4.3	4.6	4.3	0.3	0	4.4	0	0	0.3	4.6	4.3	0.2	0	4.4	4.6		
REC	0	4.3	4.6	4.3	0.3	0	4.4	0	0	0.3	4.6	4.3	0.2	0	4.4	4.6		
REF. NO.	IC9103									IC9104								
MODE	1	2	3	4	5	6	7	8		1	2	3	4	5				
STOP	0	0	0	−4.7	0	0	0	4.6		0	0.3	0	4.5	4.6				
REC	0	0	0	−4.7	0	0	0	4.6		0	0.3	0	4.5	4.6				
REF. NO.	IC9105																	
MODE	1	2	3	4	5	6	7	8	9	10	11	12	13	14	15	16		
STOP	4.5	4.6	4.6	0	0	0	4.4	0	0	4.1	4.6	4.6	4.6	0	1.3	4.6		
REC	4.5	4.6	4.6	0	0	0	4.4	0	0	4.1	4.6	4.6	4.6	0	1.3	4.6		
REF. NO.	IC9112									IC9113								
MODE	1	2	3	4	5	6	7	8		1	2	3	4	5	6	7	8	
STOP	2.1	1.2	1.2	−4.6	1.4	1.4	1.4	4.6		1.4	1.4	1.4	−4.6	0	−0.1	0	4.6	
REC	2.1	1.2	1.2	−4.6	1.4	1.4	1.4	4.6		1.4	1.4	1.4	−4.6	0	−0.1	0	4.6	
REF. NO.	IC9114																	
MODE	1	2	3	4	5	6	7	8	9	10	11	12	13	14	15	16		
STOP	0	2.7	4.6	4.5	2.7	0	3.3	0	0	4.6	4.6	1.9	0.1	0	4.5	4.6		
REC	0	2.7	4.6	4.5	2.7	0	3.3	0	0	4.6	4.6	1.9	0.1	0	4.5	4.6		
REF. NO.	IC9115																	
MODE	1	2	3	4	5	6	7	8	9	10	11	12	13	14				
STOP	4.6	3.0	5.0	1.9	1.6	2.2	3.0	0	2.9	3.2	2.6	3.0	2.9	1.6				
REC	4.6	3.0	5.0	1.9	1.6	2.2	2.9	0	2.9	3.2	2.6	3.0	2.9	1.6				
REF. NO.	IC9121									IC9201								
MODE	1	2	3							1	2	3	4	5				
STOP	5.0	0	11.4							0	4.6	0	0.3	4.6				
REC	5.0	0	11.4							0	4.6	0	0.3	4.6				
REF. NO.	IC9202																	
MODE	1	2	3	4	5	6	7	8										
STOP	1.4	1.2	0.3	0	0.9	1.4	0.2	4.6										
REC	1.4	1.2	0.3	0	0.9	1.4	0.2	4.6										
REF. NO.	IC9203																	
MODE	1	2	3	4	5	6	7	8	9	10	11	12	13	14				
STOP	1.2	1.2	1.2	4.6	1.1	1.1	1.7	1.0	1.0	1.0	0	0.2	0.2	0				
REC	1.2	1.2	1.2	4.6	1.1	1.1	1.7	1.0	1.0	1.0	0	0.2	0.2	0				
REF. NO.	IC9209									IC9212								
MODE	1	2	3	4	5	6	7	8		1	2	3	4	5	6	7	8	
STOP	−4.6	0	0	−4.6	0	0	0	4.6		4.6	2.7	2.5	2.2	0	2.7	0	2.2	
REC	−4.6	0	0	−4.6	0	0	0	4.6		4.6	2.7	2.5	2.2	0	2.8	0	2.2	
REF. NO.	IC9222																	
MODE	1	2	3	4	5	6	7	8										
STOP	4.6	2.7	2.5	2.4	0	2.7	0	2.5										
REC	4.6	2.7	2.5	2.4	0	2.7	0	2.5										
REF. NO.	Q9101			Q9102			Q9103						Q9104			Q9107		
MODE	E	C	B	E	C	B	1	2	3	4	5	6	E	C	B	E	C	B
STOP	4.6	0.2	4.5	2.0	−4.6	1.4	4.6	1.2	1.7	−4.6	1.7	1.2	−0.7	0.6	0	−0.7	4.6	0
REC	4.6	0.2	4.5	2.0	−4.6	1.4	4.6	1.2	1.7	−4.6	1.7	1.2	−0.7	0.6	0	−0.7	4.6	0
REF. NO.	Q9108			Q9109			Q9110			Q9118			Q9119			Q9134		
MODE	E	C	B	E	C	B	E	C	B	E	C	B	S	G	D	E	C	B
STOP	2.5	0	1.9	2.5	0	1.9	0	−4.7	−0.7	1.5	4.6	2.1	1.4	0	1.4	2.0	4.6	2.6
REC	2.5	0	1.9	2.5	0	1.9	0	−4.7	−0.7	1.5	4.6	2.1	1.4	0	1.4	2.0	4.6	2.6
REF. NO.	Q9202			Q9207														
MODE	E	C	B	E	C	B												
STOP	1.4	4.6	2.0	−0.7	4.6	0												
REC	1.4	4.6	2.0	−0.7	4.6	0												

IC9115
AN3916

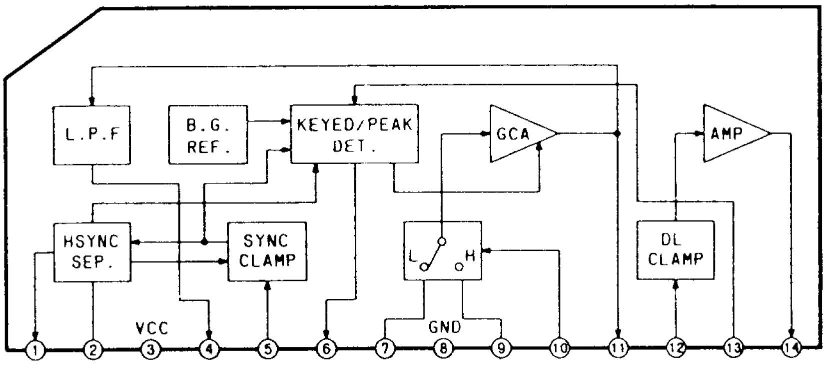

IC9212,9222
TK16031MTL

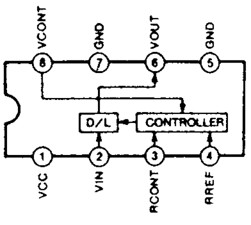

YC REC-4 SCHEMATIC DIAGRAM 4/6 (E13: AG-8700 0NLY/Page CBA-6)

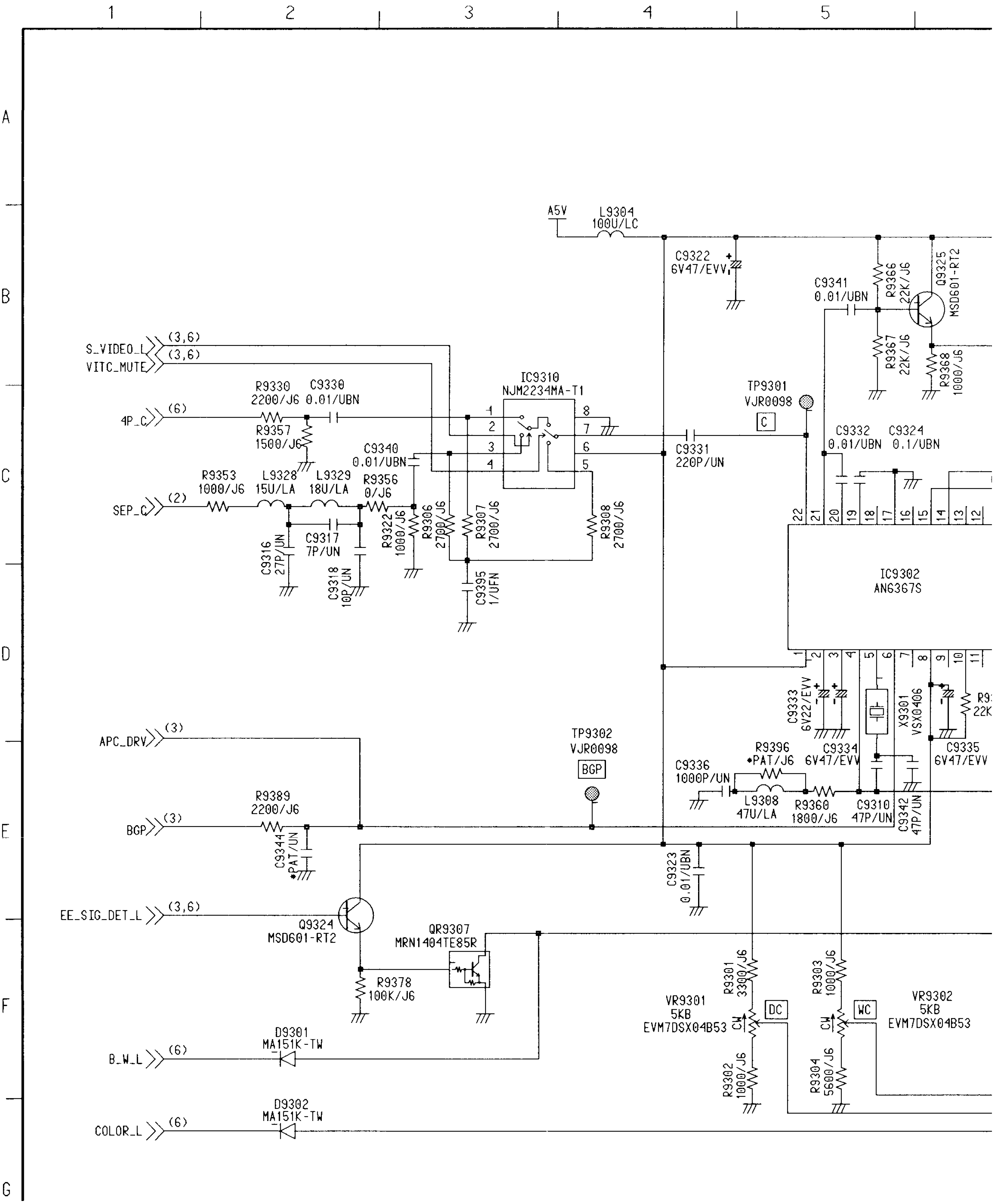

6)

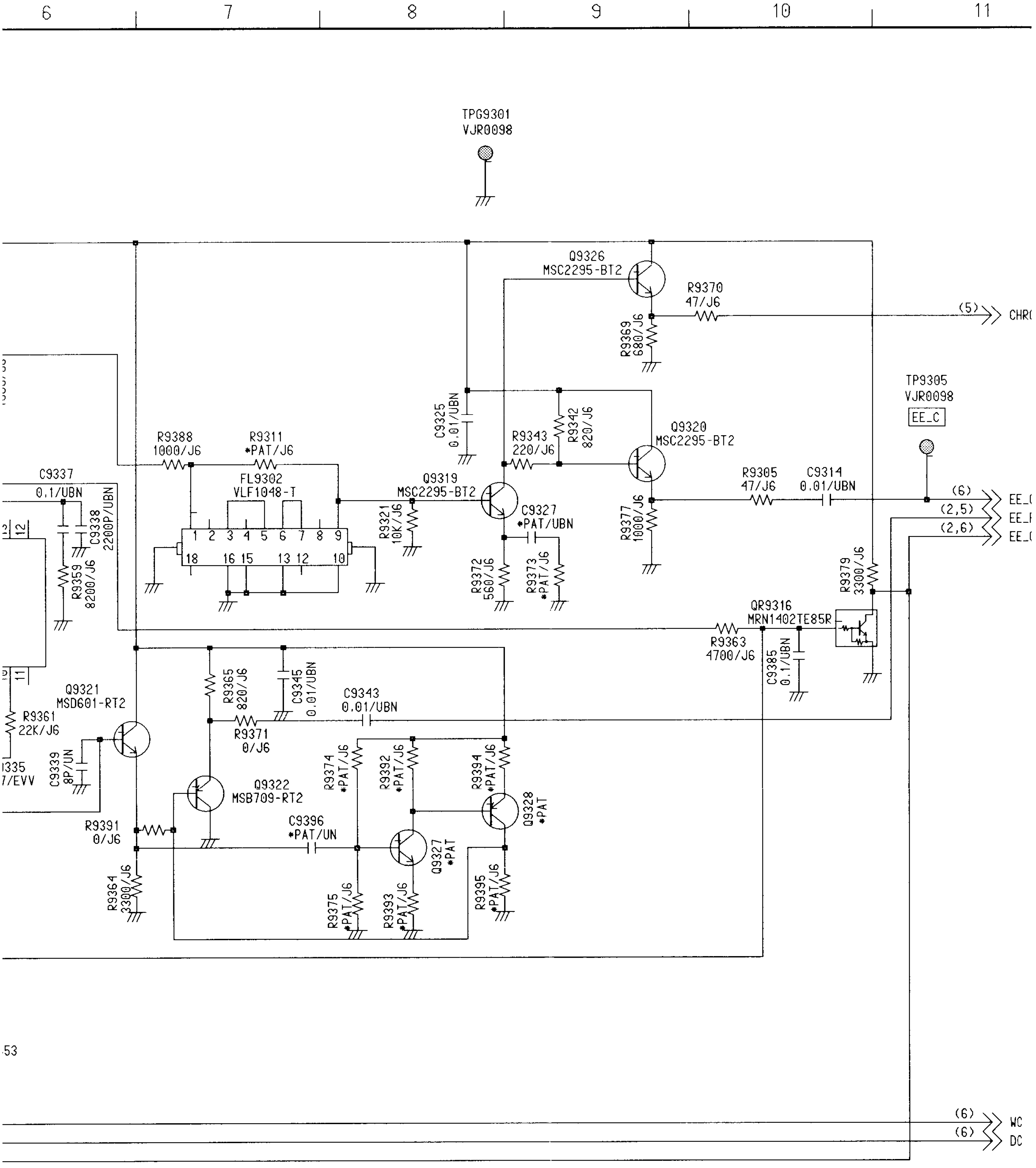

*=REFER TO THE COMPARISON CHART

Ref No.9301~9399 Series

MC-Service

11

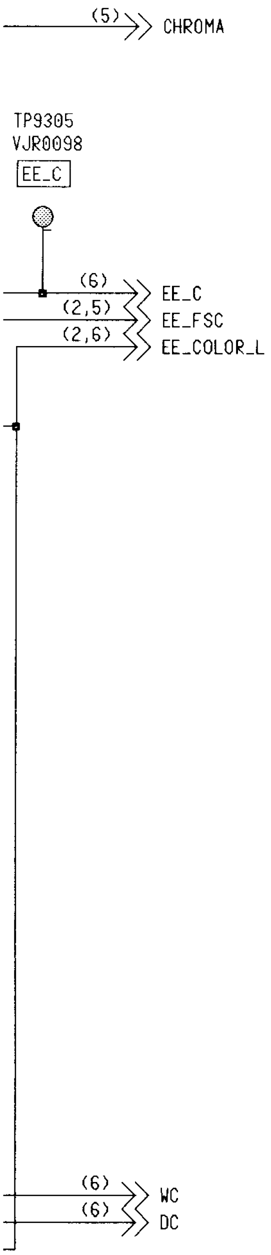

ARISON CHART
399 Series.

YC REC-4 DC VOLTAGE CHART

REF. NO.	IC9302									
MODE	1	2	3	4	5	6	7	8	9	10
STOP	4.7	3.0	2.8	2.8	2.4	3.8	3.3	4.7	3.8	1.6
REC	4.7	3.0	3.0	2.8	2.4	3.8	3.3	4.7	3.8	1.6
REF. NO.	IC9302									
MODE	11	12	13	14	15	16	17	18	19	20
STOP	4.0	0	1.9	2.6	2.2	4.6	0	2.8	2.4	2.9
REC	4.0	0	2.0	2.6	2.2	4.6	0	2.8	2.4	2.9
REF. NO.	IC9302									
MODE	21	22								
STOP	3.3	2.9								
REC	3.3	2.9								
REF. NO.	IC9310									
MODE	1	2	3	4	5	6	7	8		
STOP	2.8	3.2	2.8	0	2.8	4.7	2.1	0		
REC	2.8	3.2	2.8	0.2	2.8	4.7	2.1	0		
REF. NO.	Q9319			Q9320			Q9321			
MODE	E	C	B	E	C	B	E	C	B	
STOP	0.8	3.2	1.5	2.8	4.7	3.5	2.2	4.7	2.8	
REC	0.8	3.2	1.5	2.8	4.7	3.5	2.2	4.7	2.8	
REF. NO.	Q9322			Q9324			Q9325			
MODE	E	C	B	E	C	B	E	C	B	
STOP	2.8	0	2.2	0	4.7	0	1.7	4.7	2.3	
REC	2.8	0	2.2	0	4.7	0	1.7	4.7	2.3	
REF. NO.	Q9326									
MODE	E	C	B							
STOP	2.4	4.7	3.2							
REC	2.4	4.7	3.2							
REF. NO.	QR9307			QR9316						
MODE	E	C	B	E	C	B				
STOP	0	2.2	0	0	0.1	2.2				
REC	0	2.2	0	0	0.1	2.2				

YC REC-5 SCHEMATIC DIAGRAM 5/6 (E13: AG-8700 0NLY/Page CBA-6)

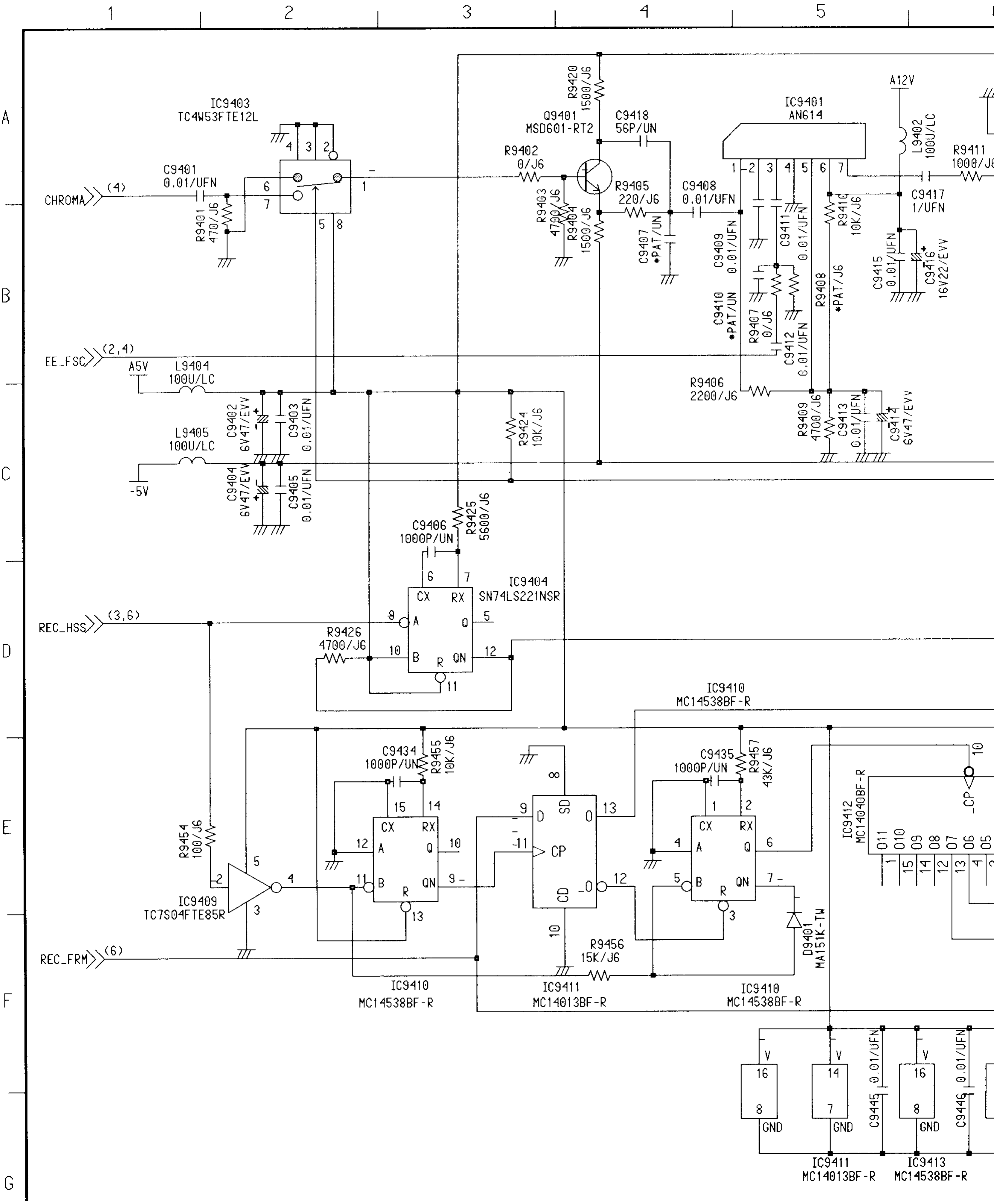

-6)

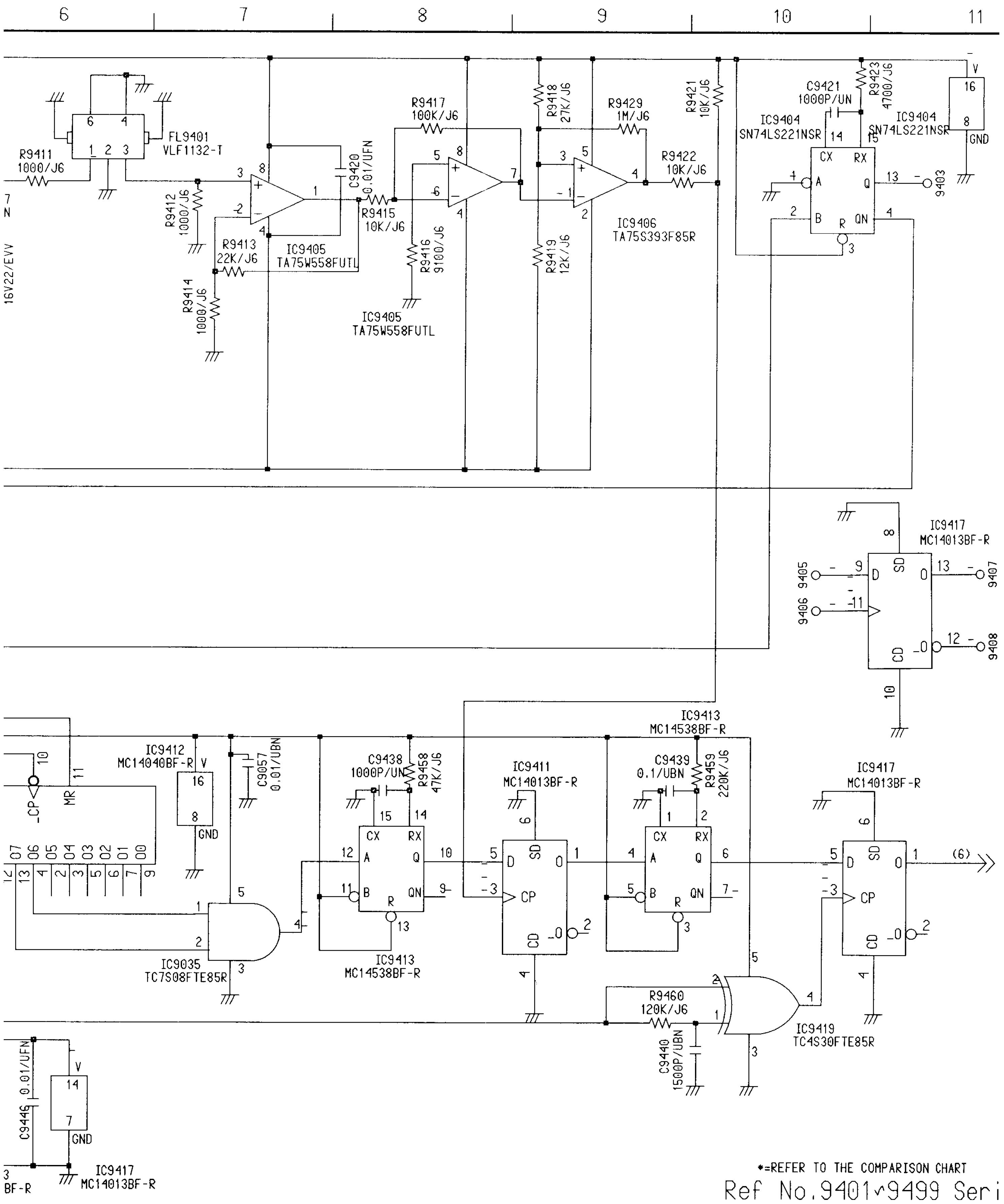

*=REFER TO THE COMPARISON CHART

Ref No.9401~9499 Seri

YC REC-5 DC VOLTAGE CHART

REF. NO.	IC9401										IC9403									
MODE	1	2	3	4	5	6	7				1	2	3	4	5	6	7	8		
STOP	3.7	4.2	4.2	0	3.8	11.4	7.7				0	0	0	0	4.4	0	0	4.8		
REC	3.7	4.2	4.2	0	3.8	11.4	7.7				0	0	0	0	4.4	0	0	4.8		
REF. NO.	IC9404																			
MODE	1	2	3	4	5	6	7	8	9	10	11	12	13	14	15	16				
STOP	0	4.5	4.8	4.4	0.3	4.5	0.8	0	4.6	4.8	4.8	4.5	0.3	4.6	0.9	4.8				
REC	0	4.5	4.8	4.4	0.3	4.5	0.8	0	4.6	4.8	4.8	4.5	0.3	4.6	0.9	4.8				
REF. NO.	IC9405										IC9406									
MODE	1	2	3	4	5	6	7	8			1	2	3	4	5					
STOP	0	0	0	−4.9	0	0	0	4.8			0	−4.9	−1.8	−4.8	4.8					
REC	0	0	0	−4.9	0	0	0	4.8			0	−4.9	−1.8	−4.8	4.8					
REF. NO.	IC9409																			
MODE	1	2	3	4	5															
STOP	0	4.6	0	0.4	4.8															
REC	0	4.6	0	0.4	4.8															
REF. NO.	IC9410																			
MODE	1	2	3	4	5	6	7	8	9	10	11	12	13	14	15	16				
STOP	0	3.4	2.4	0	0.3	1.8	3.0	0	3.8	1.1	0.4	0	4.8	3.8	0	4.8				
REC	0	3.4	2.4	0	0.3	1.8	3.0	0	3.8	1.1	0.4	0	4.8	3.7	0	4.8				
REF. NO.	IC9411																			
MODE	1	2	3	4	5	6	7	8	9	10	11	12	13	14						
STOP	0	4.8	0.1	0	0	0	0	0	2.6	0	3.8	2.4	2.4	4.8						
REC	0	4.8	0.1	0	0	0	0	0	2.5	0	3.8	2.4	2.4	4.8						
REF. NO.	IC9412																			
MODE	1	2	3	4	5	6	7	8	9	10	11	12	13	14	15	16				
STOP	0	1.2	1.2	1.0	1.2	1.2	1.2	0	1.2	1.8	2.4	0.4	1.0	0	0	4.8				
REC	0	1.2	1.2	1.0	1.2	1.2	1.2	0	1.2	1.8	2.4	0.4	1.0	0	0	4.8				
REF. NO.	IC9413																			
MODE	1	2	3	4	5	6	7	8	9	10	11	12	13	14	15	16				
STOP	0	4.7	4.8	0	4.8	0	4.8	0	4.8	0	4.8	1.0	4.8	4.8	0	4.8				
REC	0	4.7	4.8	0	4.8	0	4.8	0	4.8	0	4.8	1.0	4.8	4.8	0	4.8				
REF. NO.	IC9417																			
MODE	1	2	3	4	5	6	7	8	9	10	11	12	13	14						
STOP	2.4	2.4	0	0	3.6	0	0	0	0	0	0	4.8	0	4.8						
REC	2.4	2.4	0	0	3.6	0	0	0	0	0	0	4.8	0	4.8						
REF. NO.	IC9419																			
MODE	1	2	3	4	5															
STOP	0	2.5	0	0	4.8															
REC	0	2.5	0	0	4.8															
REF. NO.	Q9401																			
MODE	E	C	B																	
STOP	−0.7	0.7	0																	
REC	−0.7	0.7	0																	

CHART
) Series.

YC REC-6 SCHEMATIC DIAGRAM 6/6 (E13: AG-8700 0NLY/Page CBA-6)

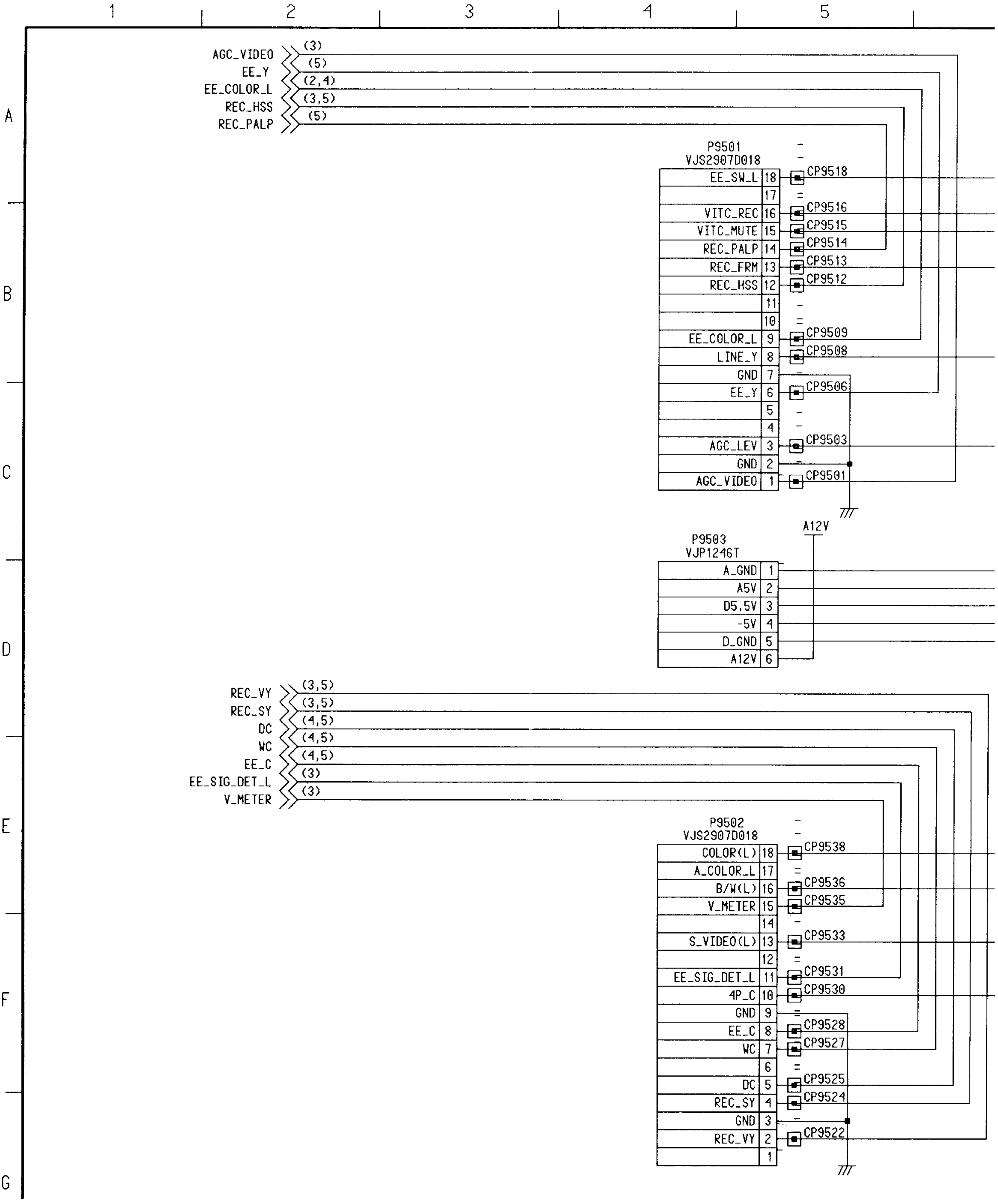

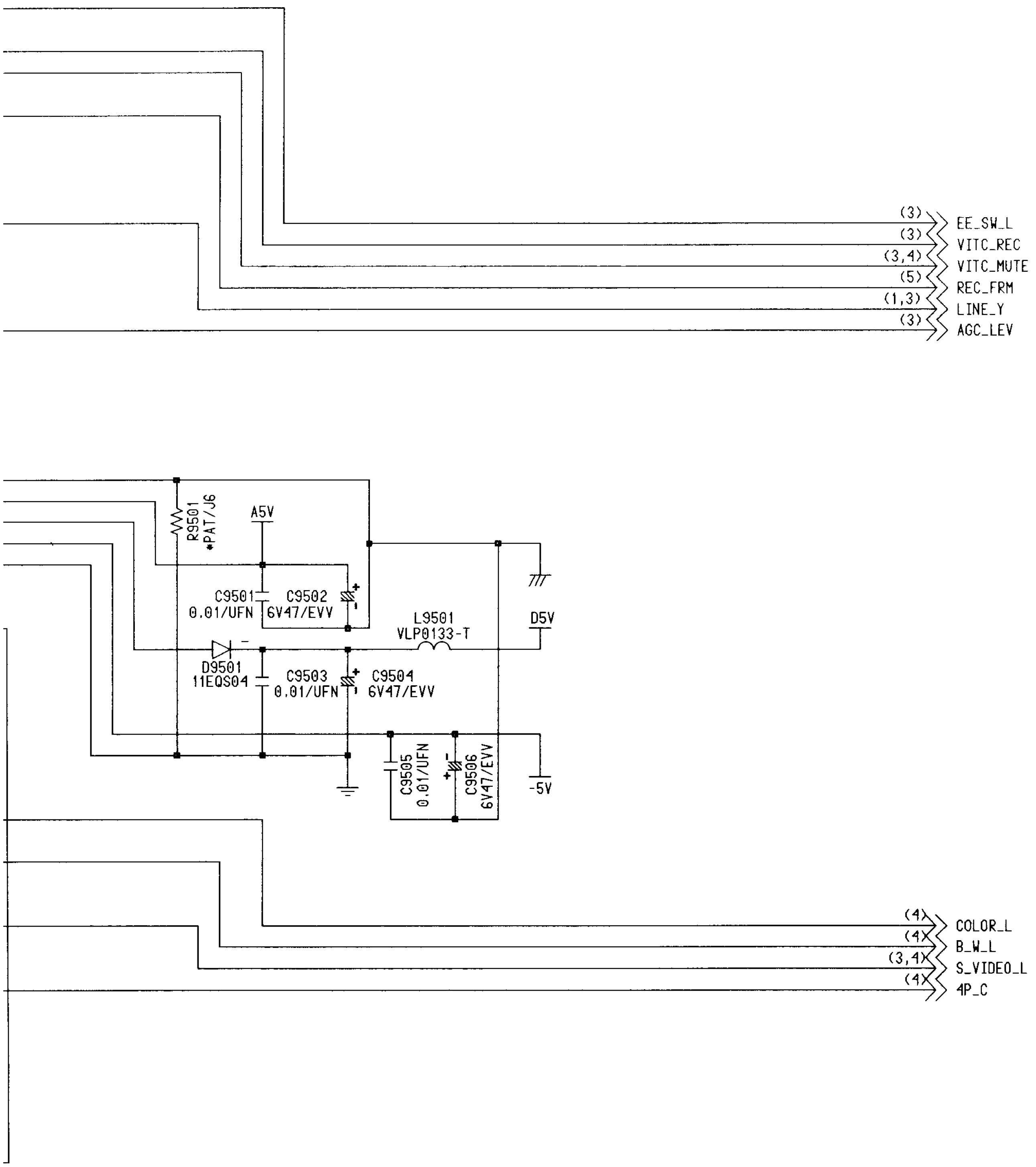

Ref No.9501~9599 Series.

INTERFACE-1 SCHEMATIC DIAGRAM 1/6 (E9: Page CBA-11)

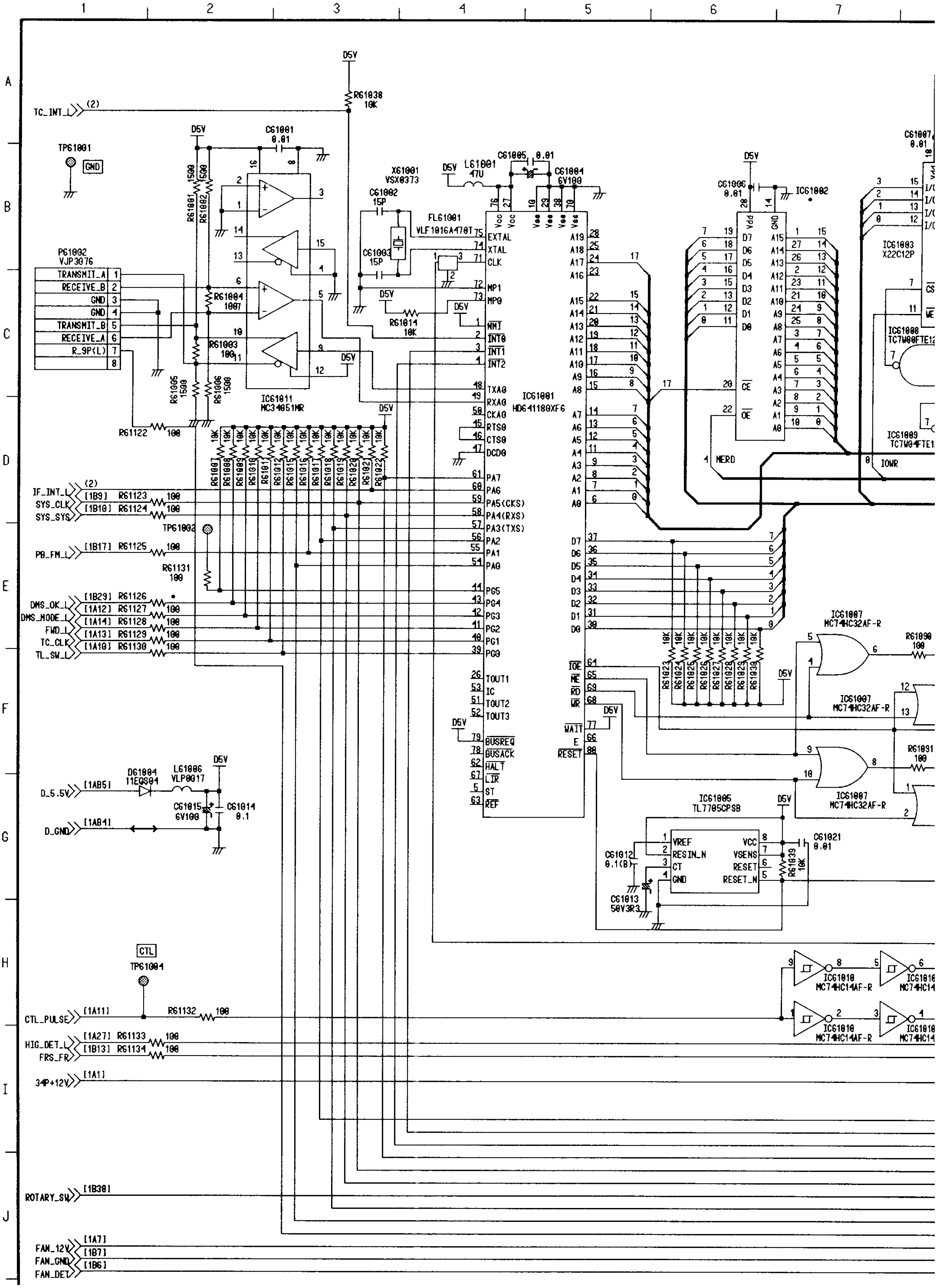

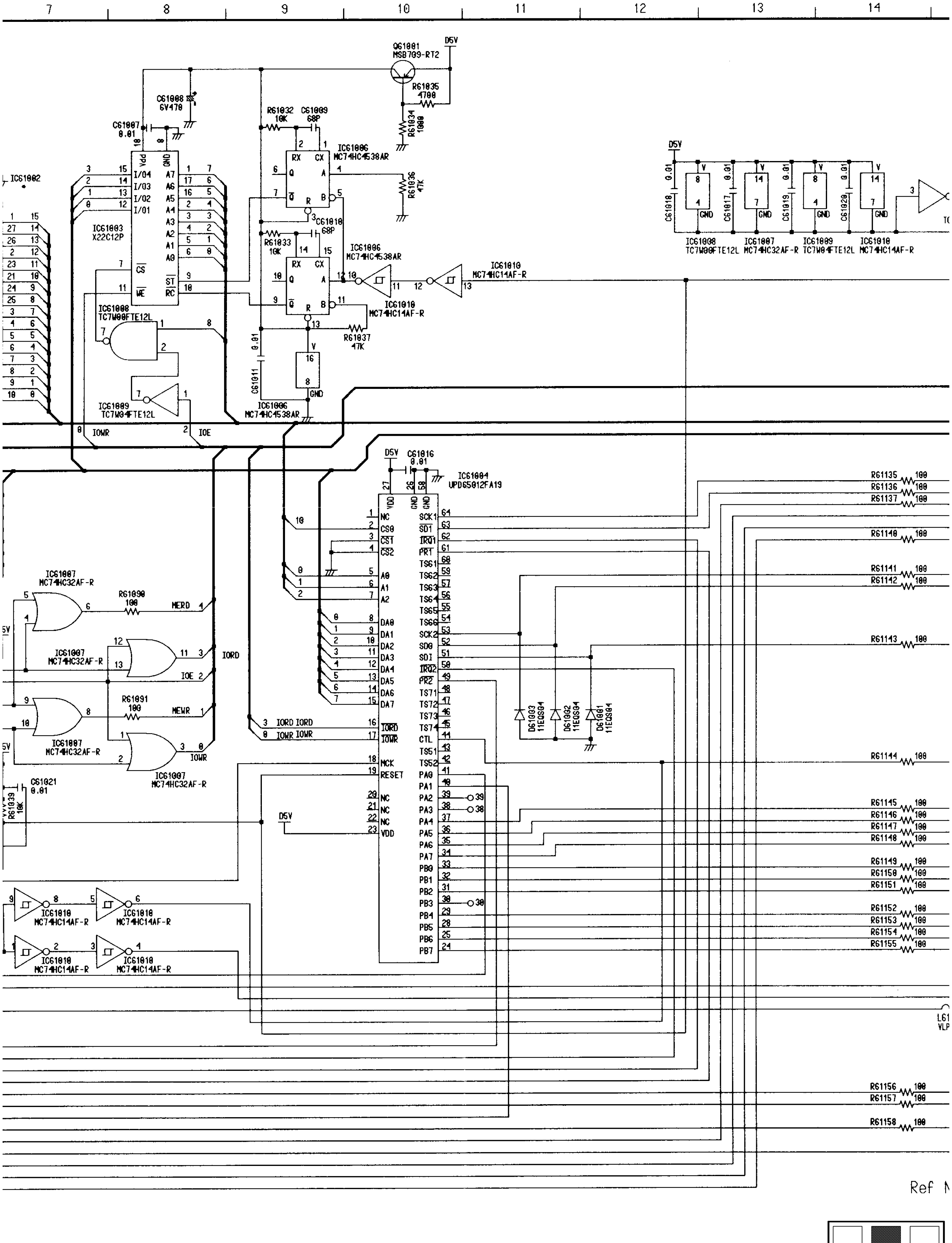

7
8
9
10
11
12
13
14
D5V
Q61001
MSB709-RT2
R61035
4700
R61034
1000
C61008
6V470
C61007
0.01
R61032
10K
C61009
68P
IC61006
MC74HC4538AR
R61036
47K
IC61002
IC61003
X22C12P
C61010
68P
R61033
10K
IC61008
TC7W00FTE12L
IC61010
MC74HC14AF-R
R61037
47K
C61011
0.01
IC61009
TC7W04FTE12L
IOWR
IOE
C61018
C61017
C61019
C61020
IC61007
MC74HC32AF-R
C61016
0.01
IC61004
UPD65012FA19
R61090
100
MERD
IORD
R61091
100
MEWR
C61021
0.01
R61039
10K
D61003
11EQS04
D61002
11EQS04
D61001
11EQS04
R61135
R61136
R61137
R61140
R61141
R61142
R61143
R61144
R61145
R61146
R61147
R61148
R61149
R61150
R61151
R61152
R61153
R61154
R61155
R61156
R61157
R61158
Ref

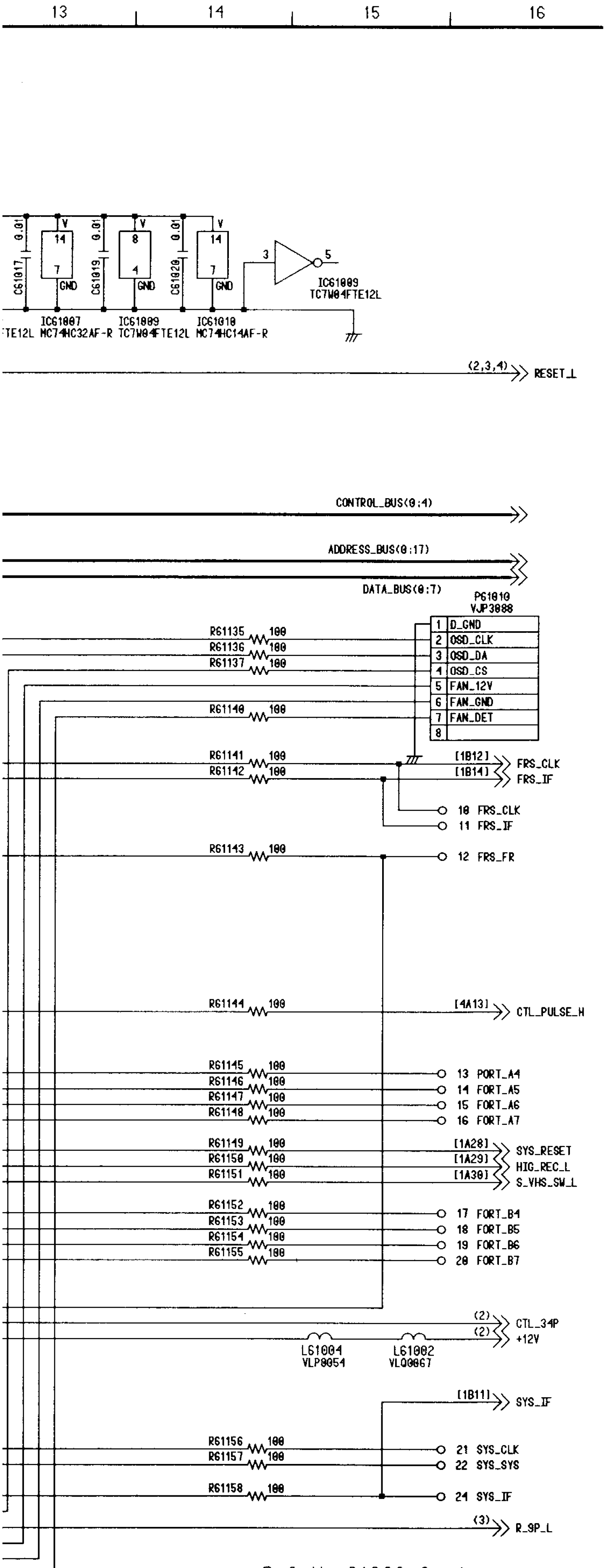

Ref No.61000 Series.

INTERFACE-1 DC VOLTAGE CHART

REF. NO.	IC61002									
MODE	1	2	3	4	5	6	7	8	9	10
STOP	0.7	1.8	3.4	2.5	2.8	2.5	2.6	2.7	2.7	2.6
REC	0.7	1.8	3.4	2.5	2.8	2.5	2.6	2.7	2.7	2.6
REF. NO.	IC61002									
MODE	11	12	13	14	15	16	17	18	19	20
STOP	2.1	2.7	2.1	0	2.8	1.9	2.5	1.9	2.0	0.6
REC	2.1	2.7	2.1	0	2.8	1.9	2.5	1.9	2.0	0.6
REF. NO.	IC61002									
MODE	21	22	23	24	25	26	27	28		
STOP	2.1	2.1	1.0	3.6	3.3	0.7	0.8	5.1		
REC	2.1	2.1	1.0	3.6	3.3	0.7	0.8	5.1		
REF. NO.	IC61003									
MODE	1	2	3	4	5	6	7	8	9	10
STOP	3.4	2.5	2.6	2.6	2.7	2.6	5.1	0	5.1	5.1
REC	3.4	2.5	2.6	2.6	2.7	2.6	5.1	0	5.1	5.1
REF. NO.	IC61003									
MODE	11	12	13	14	15	16	17	18		
STOP	5.1	2.1	2.8	2.0	2.8	2.8	2.5	5.1		
REC	5.1	2.1	2.8	2.0	2.8	2.8	2.5	5.1		
REF. NO.	IC61005									
MODE	1	2	3	4	5	6	7	8		
STOP	2.5	5.1	3.1	0	5.1	0	5.1	5.1		
REC	2.5	5.1	3.1	0	5.1	0	5.1	5.1		
REF. NO.	IC61008									
MODE	1	2	3	4	5	6	7	8		
STOP	3.3	0.1	5.1	0	2.9	0.6	5.1	5.1		
REC	3.3	0.1	5.1	0	2.9	0.6	5.1	5.1		
REF. NO.	IC61011									
MODE	1	2	3	4	5	6	7	8	9	10
STOP	0	0	0.1	0	4.5	2.6	2.4	0	5.0	3.3
REC	0	0	0.1	0	4.5	2.6	2.4	0	5.0	3.3
REF. NO.	IC61011									
MODE	11	12	13	14	15	16				
STOP	0.3	5.1	0.2	0.2	0	5.1				
REC	0.3	5.1	0.2	0.2	0	5.1				
REF. NO.	Q61001									
MODE	E	C	B							
STOP	5.1	5.1	4.3							
REC	5.1	5.1	4.3							

INTERFACE-2 SCHEMATIC DIAGRAM 2/6 (E9: Page CBA-11)

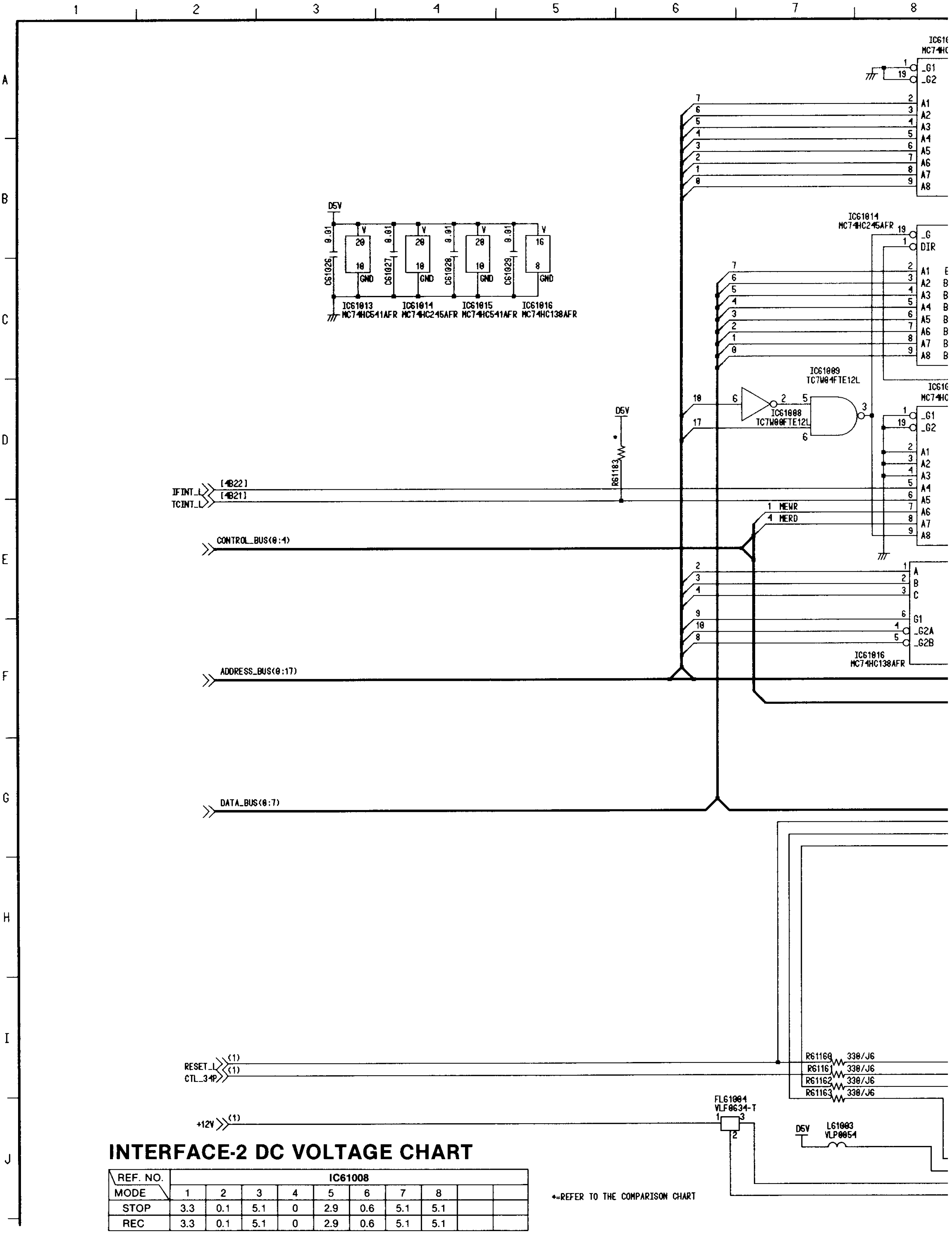

INTERFACE-2 DC VOLTAGE CHART

REF. NO.	IC61008									
MODE	1	2	3	4	5	6	7	8		
STOP	3.3	0.1	5.1	0	2.9	0.6	5.1	5.1		
REC	3.3	0.1	5.1	0	2.9	0.6	5.1	5.1		

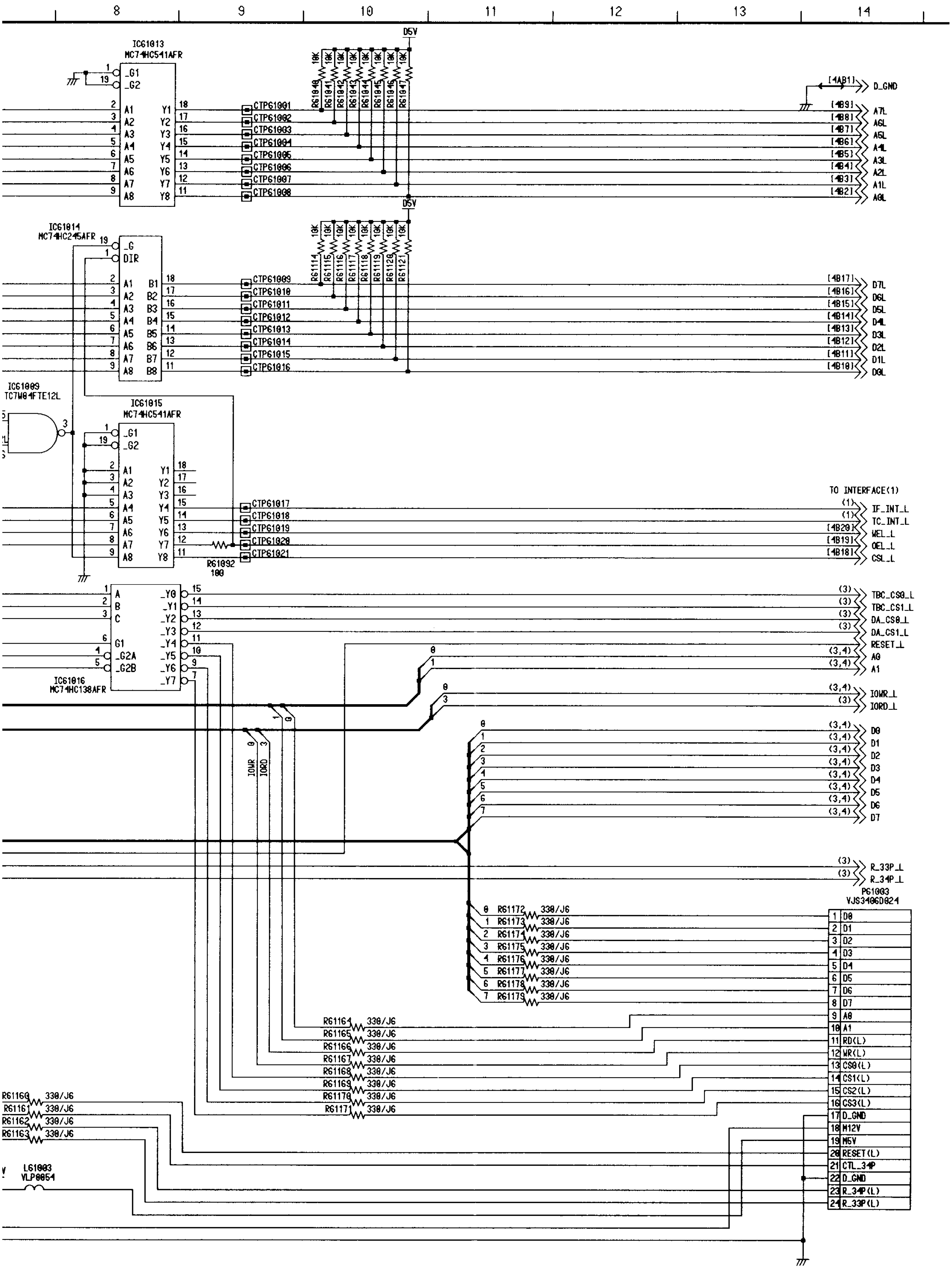
8
9
10
11
12
13
14
IC61013
MC74HC541AFR
D5V
CTP61001
CTP61002
CTP61003
CTP61004
CTP61005
CTP61006
CTP61007
CTP61008
D_GND
A7L
A6L
A5L
A4L
A3L
A2L
A1L
A0L
IC61014
MC74HC245AFR
CTP61009
CTP61010
CTP61011
CTP61012
CTP61013
CTP61014
CTP61015
CTP61016
D7L
D6L
D5L
D4L
D3L
D2L
D1L
D0L
IC61009
TC7W04FTE12L
IC61015
MC74HC541AFR
CTP61017
CTP61018
CTP61019
CTP61020
CTP61021
R61092
100
TO INTERFACE(1)
IF_INT_L
TC_INT_L
WEL_L
OEL_L
CSL_L
IC61016
MC74HC138AFR
TBC_CS0_L
TBC_CS1_L
DA_CS0_L
DA_CS1_L
RESET_L
A0
A1
IOWR_L
IORD_L
D0
D1
D2
D3
D4
D5
D6
D7
R_33P_L
R_34P_L
P61003
VJS3406D024
D_GND
M12V
M5V
RESET(L)
CTL_34P
R_34P(L)
R_33P(L)
RD(L)
WR(L)
CS0(L)
CS1(L)
CS2(L)
CS3(L)
330/J6
L61003
VLP0054

MC-Service

INTERFACE-3 SCHEMATIC DIAGRAM 3/6 (E9: Page CBA-11)

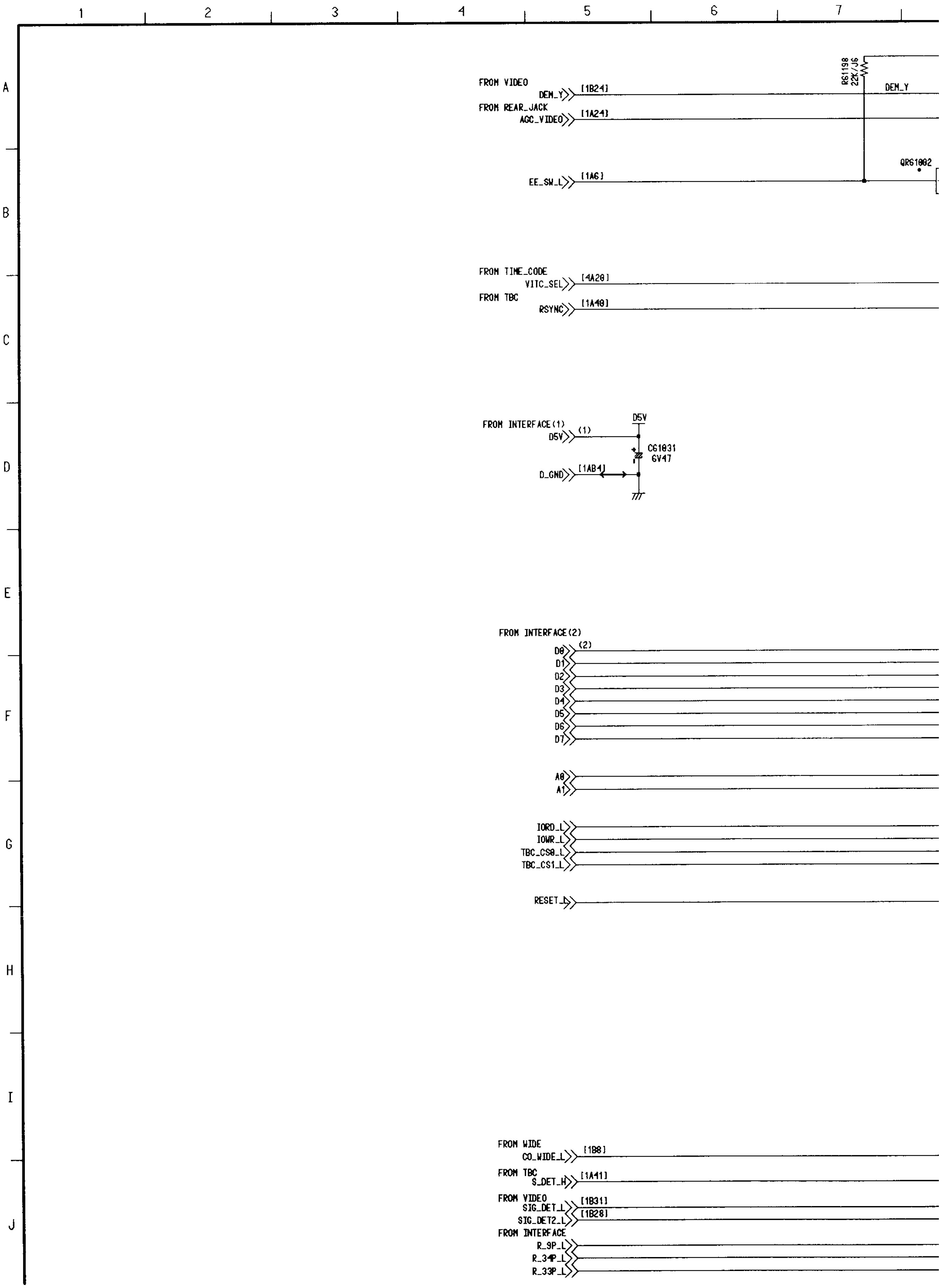

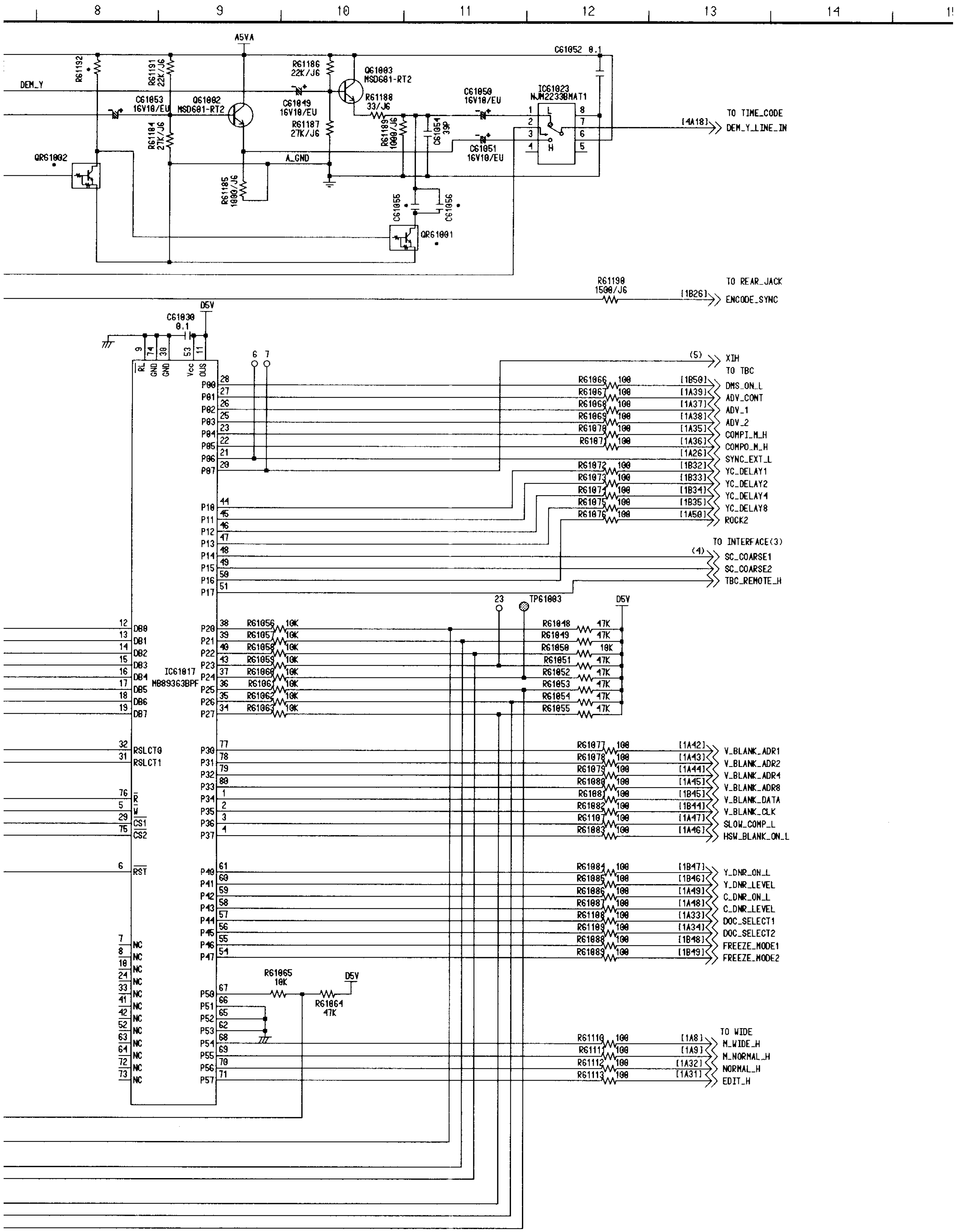

Ref No.610C

INTERFACE-3 DC VOLTAGE CHART

REF. NO.	IC61017									
MODE	1	2	3	4	5	6	7	8	9	10
STOP	5.1	5.1	0	5.1	5.1	5.1	0	0	0	0
REC	5.1	5.1	0	5.1	5.1	5.1	0	0	0	0
REF. NO.	IC61017									
MODE	11	12	13	14	15	16	17	18	19	20
STOP	5.1	2.1	2.8	2.1	2.8	1.9	2.5	1.9	2.0	0
REC	5.1	2.1	2.8	2.1	2.8	1.9	2.5	1.9	2.0	0
REF. NO.	IC61017									
MODE	21	22	23	24	25	26	27	28	29	30
STOP	5.1	5.1	5.1	0	5.1	5.1	5.1	0	5.1	0
REC	5.1	5.1	5.1	0	5.1	5.1	5.1	0	5.1	0
REF. NO.	IC61017									
MODE	31	32	33	34	35	36	37	38	39	40
STOP	2.7	2.6	0	0	5.0	5.0	5.0	5.0	0	0.2
REC	2.7	2.6	0	0	5.1	5.1	5.1	5.0	0	0.2
REF. NO.	IC61017									
MODE	41	42	43	44	45	46	47	48	49	50
STOP	0	0	5.0	5.1	5.1	5.1	5.1	5.1	5.1	0
REC	0	0	5.0	5.1	5.1	5.1	5.1	5.1	5.1	0
REF. NO.	IC61017									
MODE	51	52	53	54	55	56	57	58	59	60
STOP	5.1	0	5.1	5.1	5.1	5.1	5.1	5.1	5.1	5.1
REC	5.1	0	5.1	5.1	5.1	5.1	5.1	5.1	5.1	5.1
REF. NO.	IC61017									
MODE	61	62	63	64	65	66	67	68	69	70
STOP	5.1	0	0	0	0	0	4.9	0	0	0
REC	5.1	0	0	0	0	0	4.9	0	0	0
REF. NO.	IC61017									
MODE	71	72	73	74	75	76	77	78	79	80
STOP	5.0	0	0	0	5.1	5.1	5.1	5.1	5.1	5.1
REC	5.0	0	0	0	5.1	5.1	5.1	5.1	5.1	5.1
REF. NO.	IC61023									
MODE	1	2	3	4	5	6	7	8		
STOP	2.9	0	3.0	0	0	5.0	2.2	0		
REC	2.9	0	3.0	0	0	5.0	2.2	0		
REF. NO.	Q61002			Q61003						
MODE	E	C	B	E	C	B				
STOP	2.0	5.0	2.7	2.0	5.0	2.6				
REC	2.0	5.0	2.7	2.0	5.0	2.6				

INTERFACE-4 SCHEMATIC DIAGRAM 4/6 (E9: Page CBA-11)

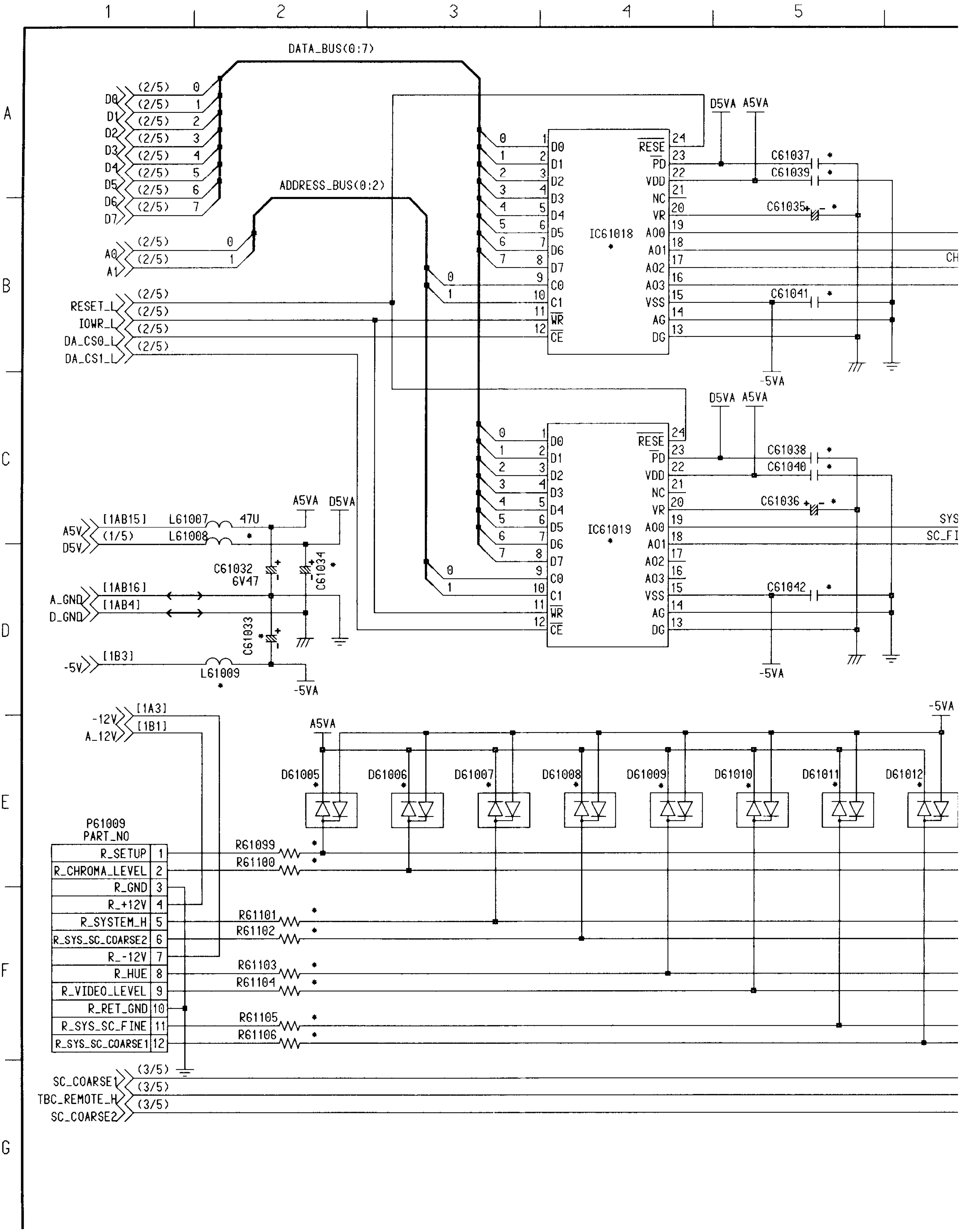

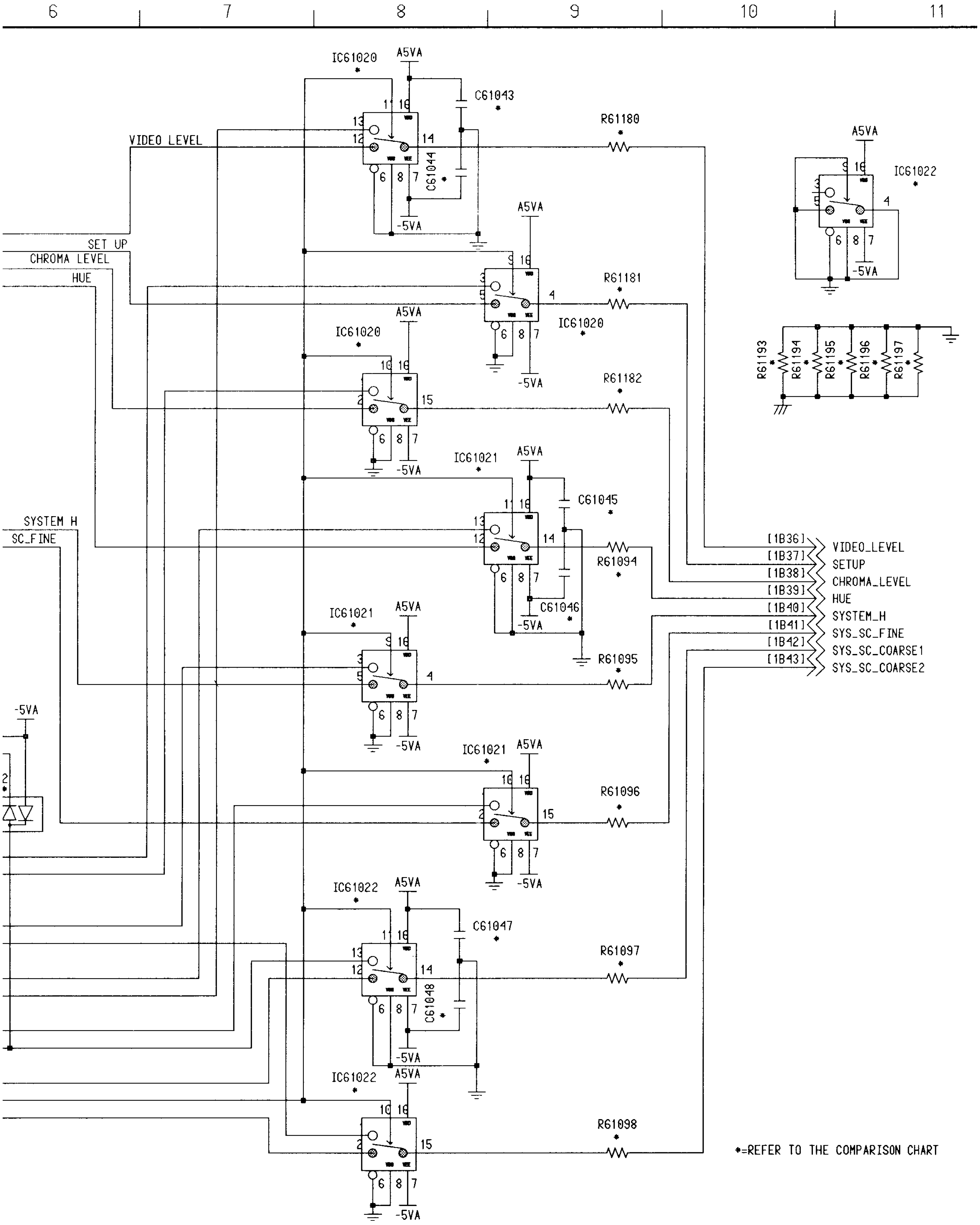

6
7
8
9
10
11
IC61020
A5VA
C61043
R61180
VIDEO LEVEL
C61044
-5VA
A5VA
IC61022
SET UP
CHROMA LEVEL
HUE
R61181
IC61020
A5VA
IC61020
R61182
R61193
R61194
R61195
R61196
R61197
IC61021
A5VA
C61045
SYSTEM H
SC_FINE
R61094
C61046
[1B36] VIDEO_LEVEL
[1B37] SETUP
[1B38] CHROMA_LEVEL
[1B39] HUE
[1B40] SYSTEM_H
[1B41] SYS_SC_FINE
[1B42] SYS_SC_COARSE1
[1B43] SYS_SC_COARSE2
IC61021
R61095
IC61021
R61096
IC61022
C61047
R61097
C61048
IC61022
R61098
*=REFER TO THE COMPARISON CHART

INTERFACE-5 SCHEMATIC DIAGRAM 5/6 (E9: Page CBA-11)

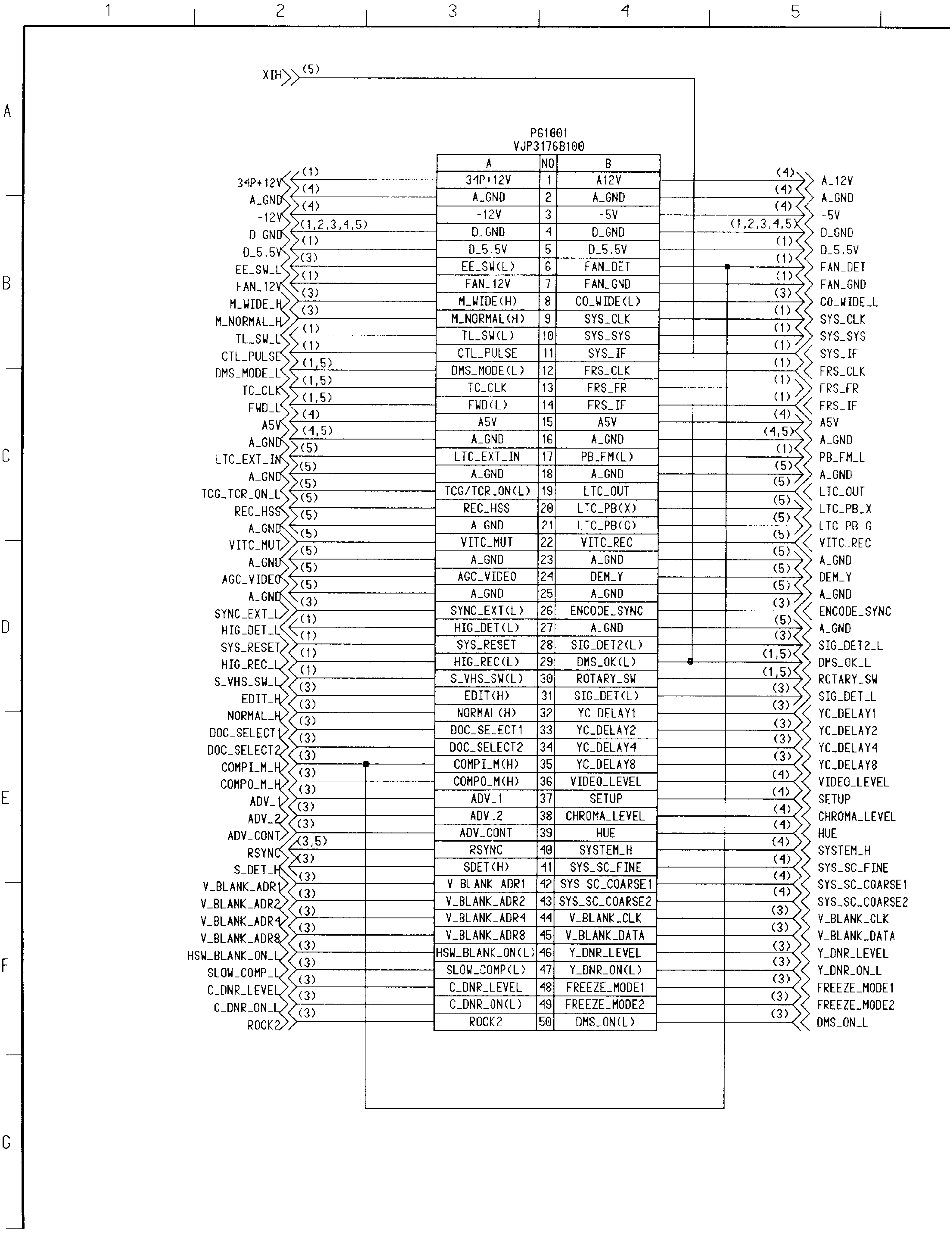

P61004
VJS3505C060

Signal	Sheet	A	NO	B	Sheet	Signal
D_GND	(2)	D_GND	1	D_GND	(2)	D_GND
FWD_L	(5)	FWD(L)	2	A0L	(2)	A0L
TC_CLK	(5)	TC_CLK	3	A1L	(2)	A1L
DMS_MODE_L	(5)	DMS_MODE(L)	4	A2L	(2)	A2L
A_GND	(5)	A_GND	5	A3L	(2)	A3L
LTC_EXT_IN	(5)	LTC_EXT_IN	6	A4L	(2)	A4L
A_GND	(5)	A_GND	7	A5L	(2)	A5L
TCG_TCR_ON_L	(5)	TCG/TCR_ON(L)	8	A6L	(2)	A6L
LTC_OUT	(5)	LTC_OUT	9	A7L	(2)	A7L
LTC_PB_X	(5)	LTC_PB(X)	10	D0L	(2)	D0L
LTC_PB_G	(5)	LTC_PB(G)	11	D1L	(2)	D1L
REC_HSS	(5)	REC_HSS	12	D2L	(2)	D2L
A_GND	(5)	A_GND	13	D3L	(2)	D3L
VITC_REC	(5)	VITC_REC	14	D4L	(2)	D4L
A_GND	(5)	A_GND	15	D5L	(2)	D5L
VITC_MUT	(5)	VITC_MUT	16	D6L	(2)	D6L
A_GND	(5)	A_GND	17	D7L	(2)	D7L
DEM_Y_LINE_IN	(5)	DEM_Y/LINE_IN	18	CSL(L)	(2)	CSL_L
A_GND	(5)	A_GND	19	OEL(L)	(2)	OEL_L
VITC_SEL	(5)	VITC_SEL	20	WEL(L)	(2)	WEL_L
A_GND	(5)	A_GND	21	TCINT(L)	(2)	TCINT_L
RSYNC	(5)	RSYNC	22	IFINT(L)	(2)	IFINT_L
A_GND	(5)	A_GND	23	CTL_PULSE	(1)	CTL_PULSE_H
DMS_OK_L	(5)	DMS_OK(L)	24			
ROTARY_SW	(5)	ROTARY_SW	25			
A_GND	(5)	A_GND	26	A_GND	(5)	A_GND
A_GND	(5)	A_GND	27	A_GND	(5)	A_GND
A5V	(1)	A5V	28	A5V	(1)	A5V
D5V	(1)	D5V	29	D5V	(1)	D5V
D5V	(1)	D5V	30	D5V	(1)	D5V

MC-Service

INTERFACE COMPARISON CHART 6/6 (E9: Page CBA-11)

REF	AG-8700 AG-8600
C61033	6V47
C61034	6V47
C61035	50V1
C61036	50V1
C61037	0.01/UFN
C61038	0.01/UFN
C61039	0.01/UFN
C61040	0.01/UFN
C61041	0.01/UFN
C61042	0.01/UFN
C61043	0.01/UFN
C61044	0.01/UFN
C61045	0.01/UFN
C61046	0.01/UFN
C61047	0.01/UFN
C61048	0.01/UFN
C61055	*PAT
C61056	*PAT
D61005	MA153-TX
D61006	MA153-TX
D61007	MA153-TX
D61008	MA153-TX
D61009	MA153-TX
D61010	MA153-TX
D61011	MA153-TX
D61012	MA153-TX
IC61002	VSI1403J
IC61018	MB86023PF
IC61019	MB86023PF
IC61020	MC74HC4053FR
IC61021	MC74HC4053FR
IC61022	MC74HC4053FR
L61008	47U
L61009	47U
P61009	VJP3092
QR61001	*PAT
QR61002	*PAT
R61094	100/J6
R61095	100/J6
R61096	100/J6
R61097	100/J6
R61098	100/J6
R61099	100/J6
R61100	100/J6
R61101	100/J6
R61102	100/J6

REF	AG-8700 AG-8600
R61103	100/J6
R61104	100/J6
R61105	100/J6
R61106	100/J6
R61126	*PAT/J6
R61180	100/J6
R61181	100/J6
R61182	100/J6
R61183	*PAT/J6
R61192	*PAT/J6
R61193	0/J6
R61194	0/J6
R61195	0/J6
R61196	0/J6
R61197	0/J6

HEAD AMP SCHEMATIC DIAGRAM (E15: Page CBA-14)

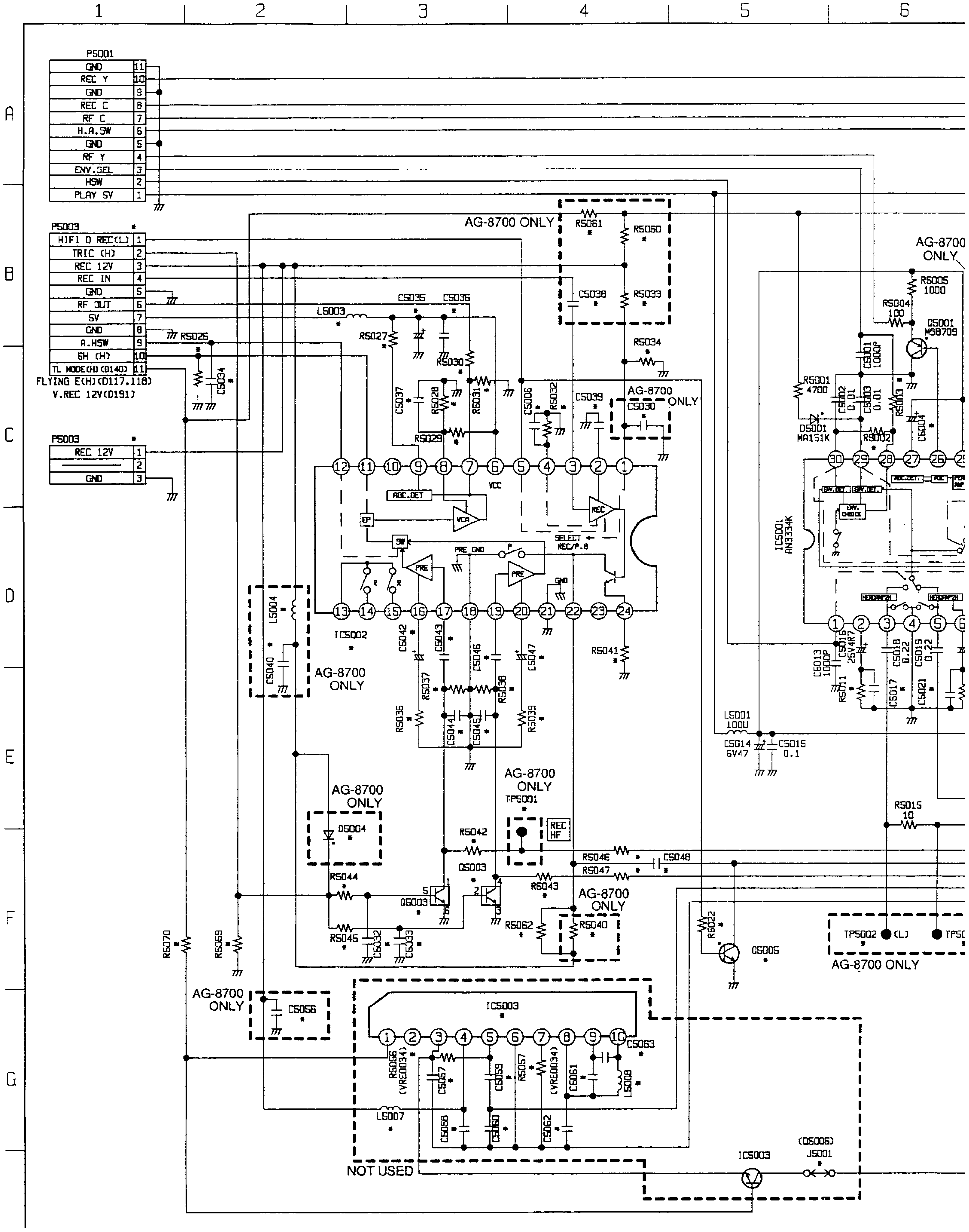

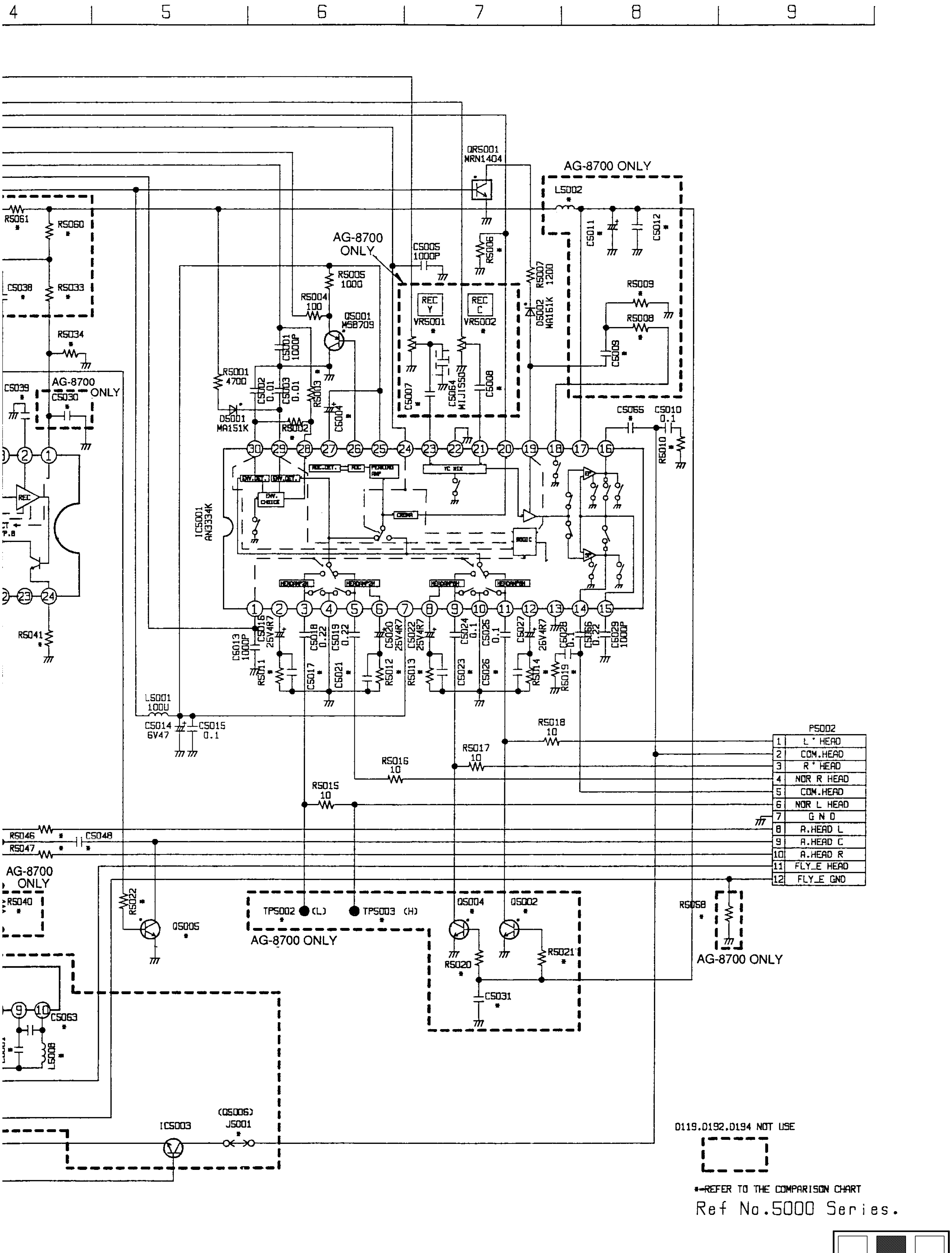

4 5 6 7 8 9
QR5001 MRN1404
AG-8700 ONLY
L5002
C5011
C5012
R5061
R5060
C5038
R5033
R5034
C5039
C5030
R5005 1000
R5004 100
Q5001 M58709
C5005 1000P
REC Y
REC C
VR5001
VR5002
R5006
R5007 1200
D5002 MA151K
R5009
R5008
C5009
R5001 4700
D5001 MA151K
C5001 1000P
C5002 0.01
C5003 0.01
R5003
R5002
C5004
C5007
C5064 MIJ1550
C5008
C5065
C5010 0.1
R5010
IC5001 AN3334K
REC
R5041
C5013 1000P
C5016 25V4R7
C5018 0.22
C5019 0.22
C5020 25V4R7
C5022 25V4R7
C5024 0.1
C5025 0.1
C5027 25V4R7
C5028 0.1
C5066 0.22
C5029 1000P
R5011
C5017
C5021
R5012
R5013
C5023
C5026
R5014
R5019
L5001 100U
C5014 6V47
C5015 0.1
R5018 10
R5017 10
R5016 10
R5015 10
PS002
1 L' HEAD
2 COM.HEAD
3 R' HEAD
4 NOR R HEAD
5 COM.HEAD
6 NOR L HEAD
7 G N D
8 A.HEAD L
9 A.HEAD C
10 A.HEAD R
11 FLY_E HEAD
12 FLY_E GND
R5046
R5047
C5048
R5040
R5022
Q5005
TP5002 (L)
TP5003 (H)
Q5004
Q5002
R5020
R5021
C5031
R5058
C5063
L5008
IC5003
(Q5006) J5001
D119.D192.D194 NOT USE
*-REFER TO THE COMPARISON CHART
Ref No.5000 Series.

	AG-8700	AG-8600
C5004	50V0.1	50V1
C5006	0.01	0.01
C5007	0.01	—
C5008	0.01	—
C5009	1800P(J)(NPO)	—
C5011	16V22	—
C5012	0.047	—
C5017	12P	12P
C5021	12P	12P
C5023	3P	3P
C5026	3P	3P
C5030	0.01	—
C5031	0.1	—
C5032	0.1	0.1
C5033	0.1	0.1
C5034	1000P(K)	1000P(K)
C5035	6V47	6V47
C5036	0.01	0.01
C5037	0.01(K)	0.01(K)
C5038	0.01(K)	—
C5039	0.01	0.01
C5040	0.01	—
C5042	50V1	50V1
C5043	470P	470P
C5044	100P	100P
C5045	100P	100P
C5046	470P	470P
C5047	50V1	50V1
C5048	0.0047	0.0047
C5056	0.01	—
C5057	—	—
C5058	—	—
C5059	—	—
C5060	—	—
C5061	—	—
C5062	—	—
C5063	—	—
C5065	—	—
D5004	MA151K-TW	—
IC5002	BA7740FS	BA7740FS
IC5003	—	—
J5001	—	—
L5002	100U	—
L5003	100U	100U
L5004	100U	—
L5007	—	—
L5008	—	—
P5003	VJP3091	VJP3091
Q5002	2SC2295	—
Q5003	XN4504-TW	XN4504-TW
Q5004	2SC2295	—
Q5005	2SC2295	2SC2295
R5002	680K	680K
R5003	22K	22K
R5006	1500	1500
R5008	—	—
R5009	470	—
R5010	1	1
R5011	1200	1200
R5012	1200	1200
R5013	1200	1200
R5014	1200	1200
R5019	330	390
R5020	3300	—
R5021	3300	—
R5022	1500	1500
R5026	0	0
R5027	33K	33K
R5028	24K(G)	24K(G)
R5029	27K(G)	27K(G)
R5030	390	390
R5031	10K	10K
R5032	47K	47K
R5033	27K	—
R5034	15K	15K
R5036	3300	3300
R5037	1500	1500
R5038	1500	1500
R5035	3300	3300
R5040	220(1/4W)	—
R5041	10	10
R5042	10	10
R5043	10	10
R5044	10K	10K
R5045	10K	10K
R5046	470	470
R5047	470	470
R5056	—	—
R5057	—	—
R5058	0	—
R5059	47K	47K
R5060	—	—
R5061	0	—
R5062	220(1/4W)	—
R5070	0	—
TP5001	VJR0098	—
TP5002	VJR0098	—
TP5003	VJR0098	—
VR5001	2KB(CA)	—
VR5G02	2KB(CA)	—

0-ERJ6GEY0R00V

HEAD AMP DC VOLTAGE CHART

REF. NO.	IC5001									
MODE	1	2	3	4	5	6	7	8	9	10
EJECT	5.0	0.8	0.6	0	0.6	0.8	5.0	0.8	0.6	0
REC	5.0	0	0	0	0	0	0.3	0	0	0
REF. NO.	IC5001									
MODE	11	12	13	14	15	16	17	18	19	20
EJECT	0.6	0.8	0	0	0	0	0	0	0.6	2.3
REC	0	0	0	5.9	5.8	5.9	11.2	0	2.7	0
REF. NO.	IC5001									
MODE	21	22	23	24	25	26	27	28	29	30
EJECT	0	0	0	5.0	5.0	1.8	3.2	0.1	2.2	2.2
REC	4.6	0	4.6	0	6.3	0	0	0.2	11.1	3.6
REF. NO.	IC5002									
MODE	1	2	3	4	5	6	7	8	9	10
EJECT	0.3	0.5	2.8	1.2	3.7	5.0	2.4	2.3	4.9	0
REC	4.0	1.3	2.7	1.3	0.1	5.0	3.7	2.3	4.9	0
REF. NO.	IC5002									
MODE	11	12	13	14	15	16	17	18	19	20
EJECT	0	5.0	0	0	0	0.8	0.7	0	0.7	0.8
REC	0	5.0	0	0	0	0	0	0	0	0
REF. NO.	IC5002									
MODE	21	22	23	24						
EJECT	0	0	0	0						
REC	0	4.4	0	0.6						
REF. NO.	Q5001			Q5002						
MODE	E	C	B	E	C	B				
EJECT	2.4	0	1.8	0	0	0				
REC	0.3	0	0	0	0	0.8				
REF. NO.	Q5003						Q5004			
MODE	1	2	3	4	5	6	E	C	B	
EJECT	0	0.6	0	0	0.6	0	0	0	0	
REC	0	0.7	0	0	0.7	0	0	0	0.8	
REF. NO.	Q5005			QR5001						
MODE	E	C	B	E	C	B				
EJECT	0	0	0.8	0	0	5.0				
REC	0	0	0	0	2.5	0.3				

FRONT-2 DC VOLTAGE CHART

REF. NO.	Q62002			Q62003			Q62004			
MODE	E	C	B	E	C	B	E	C	B	
STOP	0	2.9	0.2	0	3.8	0	0	3.7	0	
REC	0	3.7	0	0	2.8	0.2	0	3.7	0	
REF. NO.	Q62005			Q62006			Q62007			
MODE	E	C	B	E	C	B	E	C	B	
STOP	0	3.5	0	5.1	2.6	4.9	5.1	2.6	4.9	
REC	0	2.5	0.2	5.1	1.8	4.9	5.1	2.6	4.9	
REF. NO.	Q62008			Q62009						
MODE	E	C	B	E	C	B				
STOP	5.2	2.6	4.9	5.1	1.8	4.9				
REC	5.1	2.6	4.9	5.1	1.8	4.9				

FRONT-2 SCHEMATIC DIAGRAM 2/4 (E16: Page CBA-12)

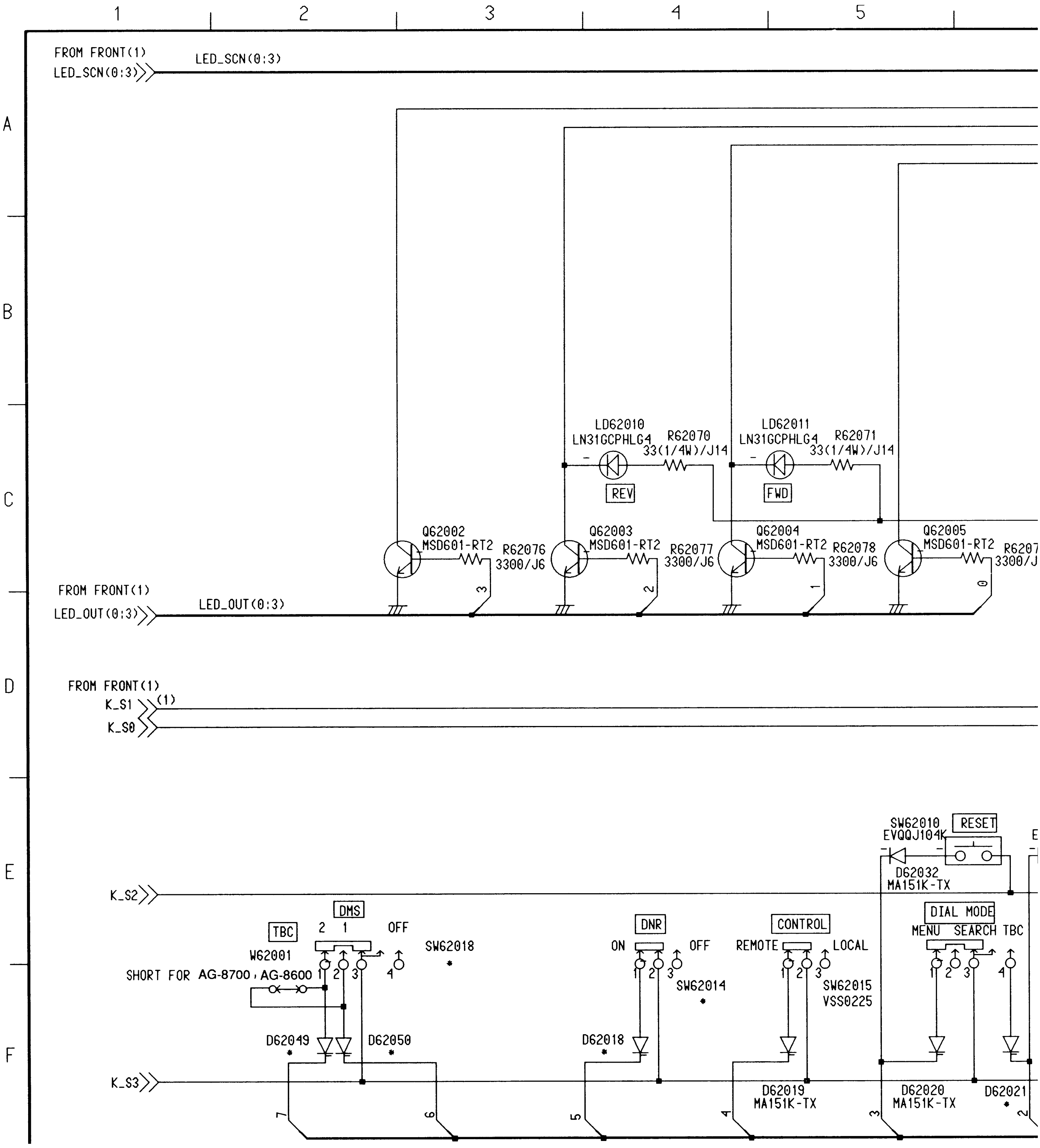

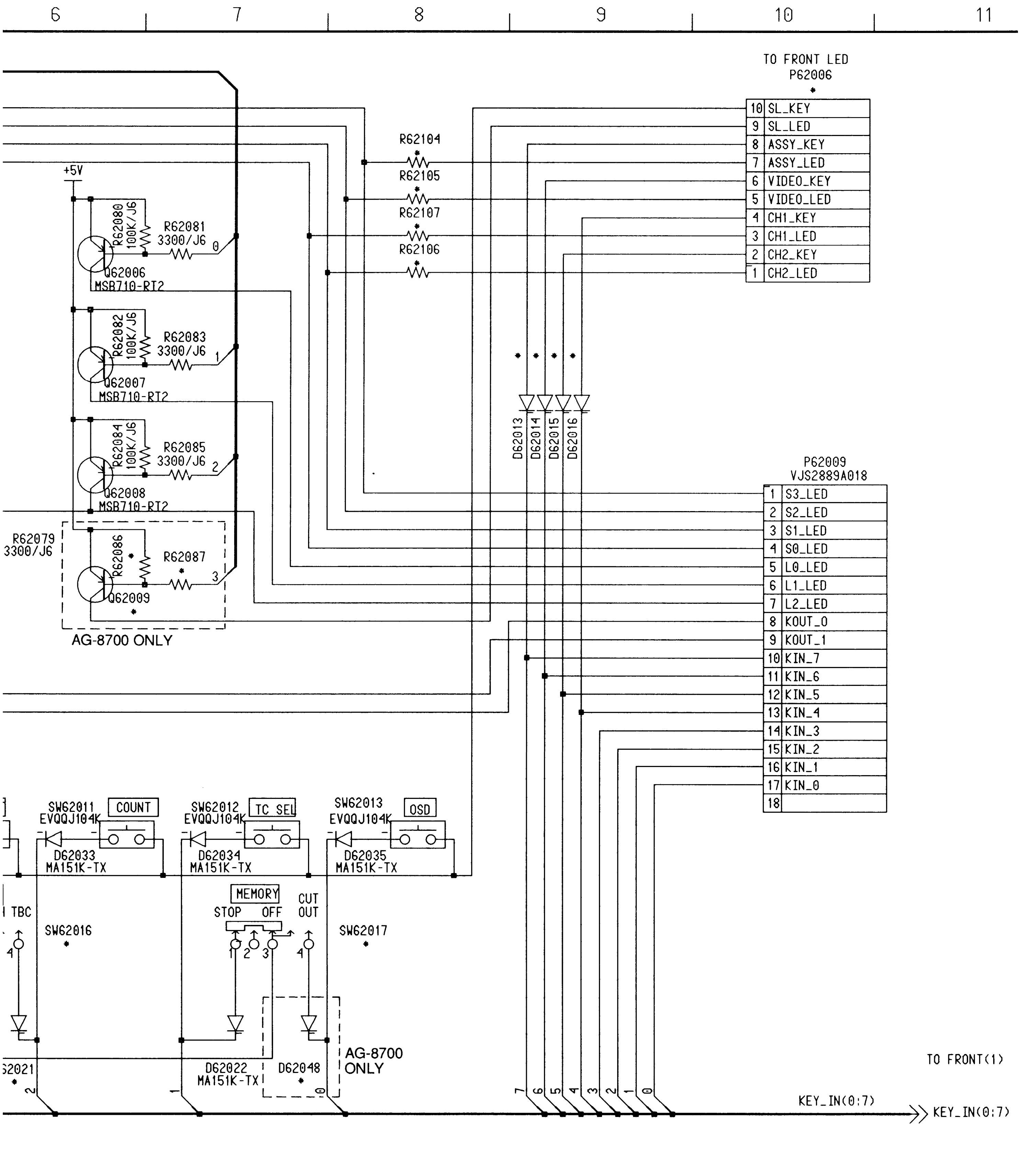

*=REFER TO THE COMPARISON CHART

FRONT-1 SCHEMATIC DIAGRAM 1/4 (E16: Page CBA-12)

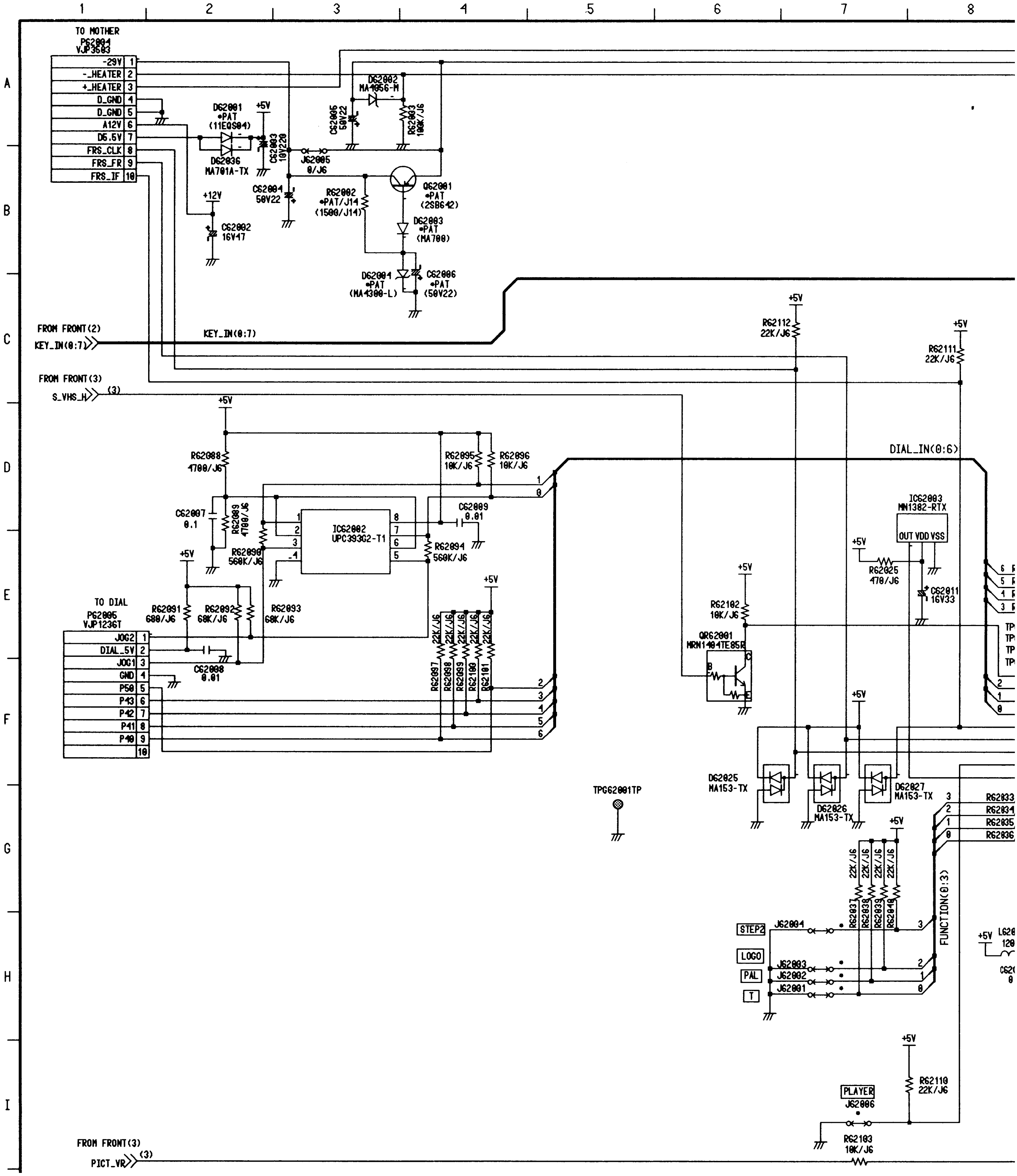

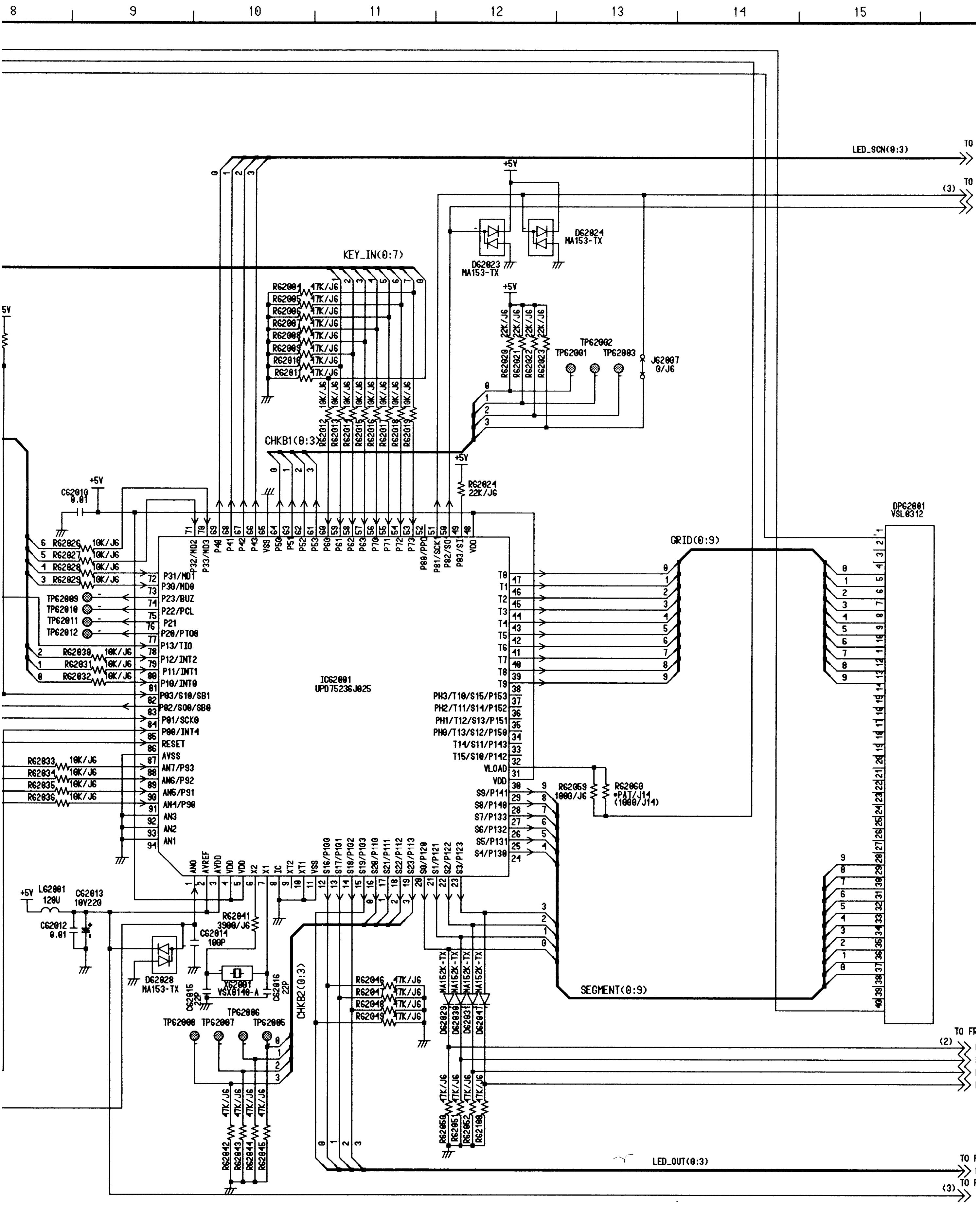

*=REFER TO THE COMPARISON CHART

Ref No.62000 Series.

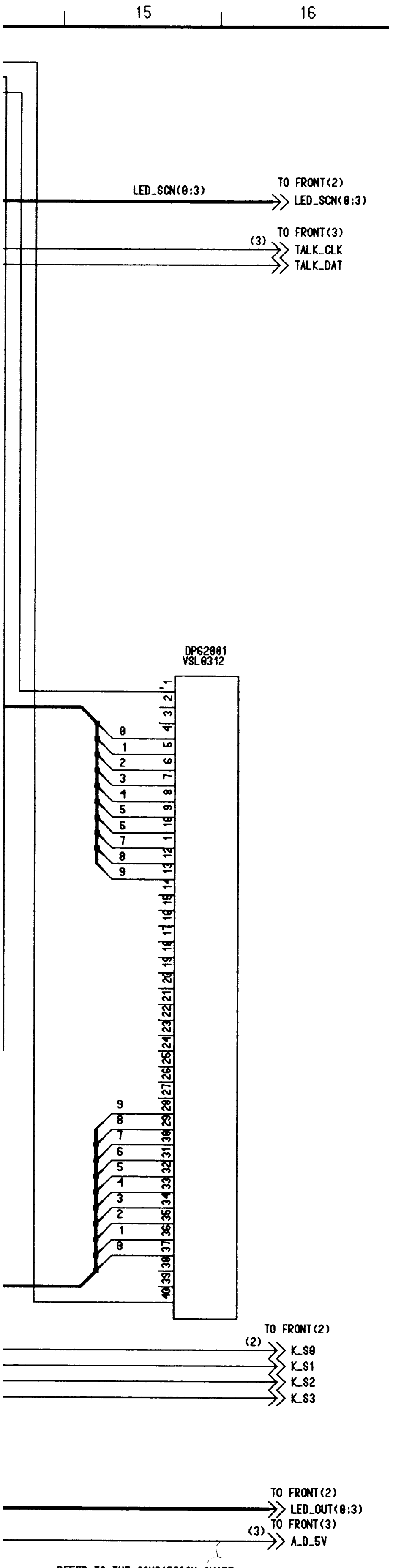

*=REFER TO THE COMPARISON CHART

Ref No.62000 Series.

FRONT-1 DC VOLTAGE CHART

REF. NO.	IC62001									
MODE	1	2	3	4	5	6	7	8	9	10
STOP	–	5.1	5.1	5.1	5.1	2.6	2.5	0	5.2	0
REC	–	5.1	5.1	5.1	5.1	2.6	2.5	0	5.1	0
REF. NO.	IC62001									
MODE	11	12	13	14	15	16	17	18	19	20
STOP	0	0	0	0	0	0	0	0	0	–
REC	0	0	1.2	0	1.2	0	0	0	0	–
REF. NO.	IC62001									
MODE	21	22	23	24	25	26	27	28	29	30
STOP	−3.6	−6.6	−6.6	−3.8	−3.8	−22.7	−25.5	−14.5	−17.2	5.2
REC	−8.9	−8.7	−12.1	−13.8	−13.7	−16.1	−25.5	−14.5	−17.2	5.2
REF. NO.	IC62001									
MODE	31	32	33	34	35	36	37	38	39	40
STOP	−26.0	0	0	0	0	0	0	−23.0	−23.0	−23.0
REC	−26.0	0	0	0	0	0	0	−23.0	−23.0	−23.0
REF. NO.	IC62001									
MODE	41	42	43	44	45	46	47	48	49	50
STOP	−23.0	−22.9	−22.9	−22.9	−22.7	−22.7	−23.0	5.2	5.1	0
REC	−23.0	−23.1	−23.2	−23.3	−23.0	−23.1	−23.3	5.1	5.1	1.0
REF. NO.	IC62001									
MODE	51	52	53	54	55	56	57	58	59	60
STOP	0	5.2	0	0	0	0	0	0	0	2.5
REC	4.7	5.1	0	0	0	0	0	0	0	2.4
REF. NO.	IC62001									
MODE	61	62	63	64	65	66	67	68	69	70
STOP	0	0	0	0	0	5.1	5.1	5.1	5.1	0
REC	0	0	0	0	0	3.8	3.8	3.8	3.8	0
REF. NO.	IC62001									
MODE	71	72	73	74	75	76	77	78	79	80
STOP	5.1	5.1	5.1	0	2.5	0	0	0	5.2	0
REC	5.1	5.1	5.1	0	2.5	0	0	0	5.2	0
REF. NO.	IC62001									
MODE	81	82	83	84	85	86	87	88	89	90
STOP	5.2	5.1	0	0	5.2	5.2	0	0	5.2	0
REC	5.1	5.1	3.8	5.1	5.1	0	0	0	0	0
REF. NO.	IC62001									
MODE	91	92	93	94						
STOP	0	0	0	0						
REC	0	0	0	0						
REF. NO.	IC62002									
MODE	1	2	3	4	5	6	7	8		
STOP	0	2.5	4.5	0	4.6	2.5	5.1	5.1		
REC	0	2.5	4.5	0	4.6	2.5	5.1	5.1		
REF. NO.	IC62003									
MODE	1	2	3							
STOP	5.1	5.1	0							
REC	5.1	5.1	0							
REF. NO.	QR62001									
MODE	E	C	B							
STOP	0	0	4.6							
REC	0	0	4.9							

IC62002
uPC39362

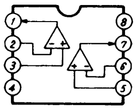

FRONT-3 SCHEMATIC DIAGRAM 3/4 (E16: Page CBA-12)

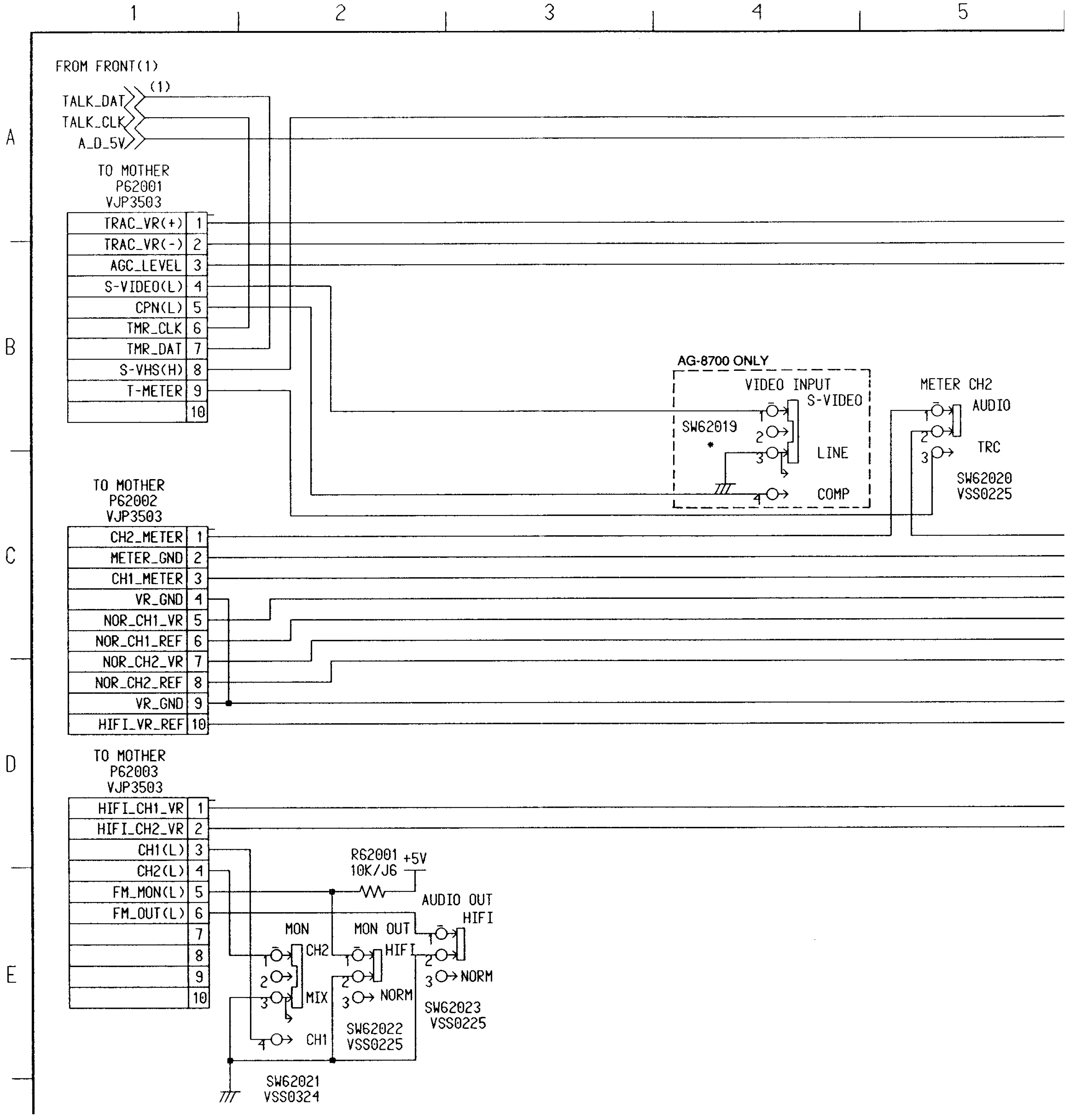

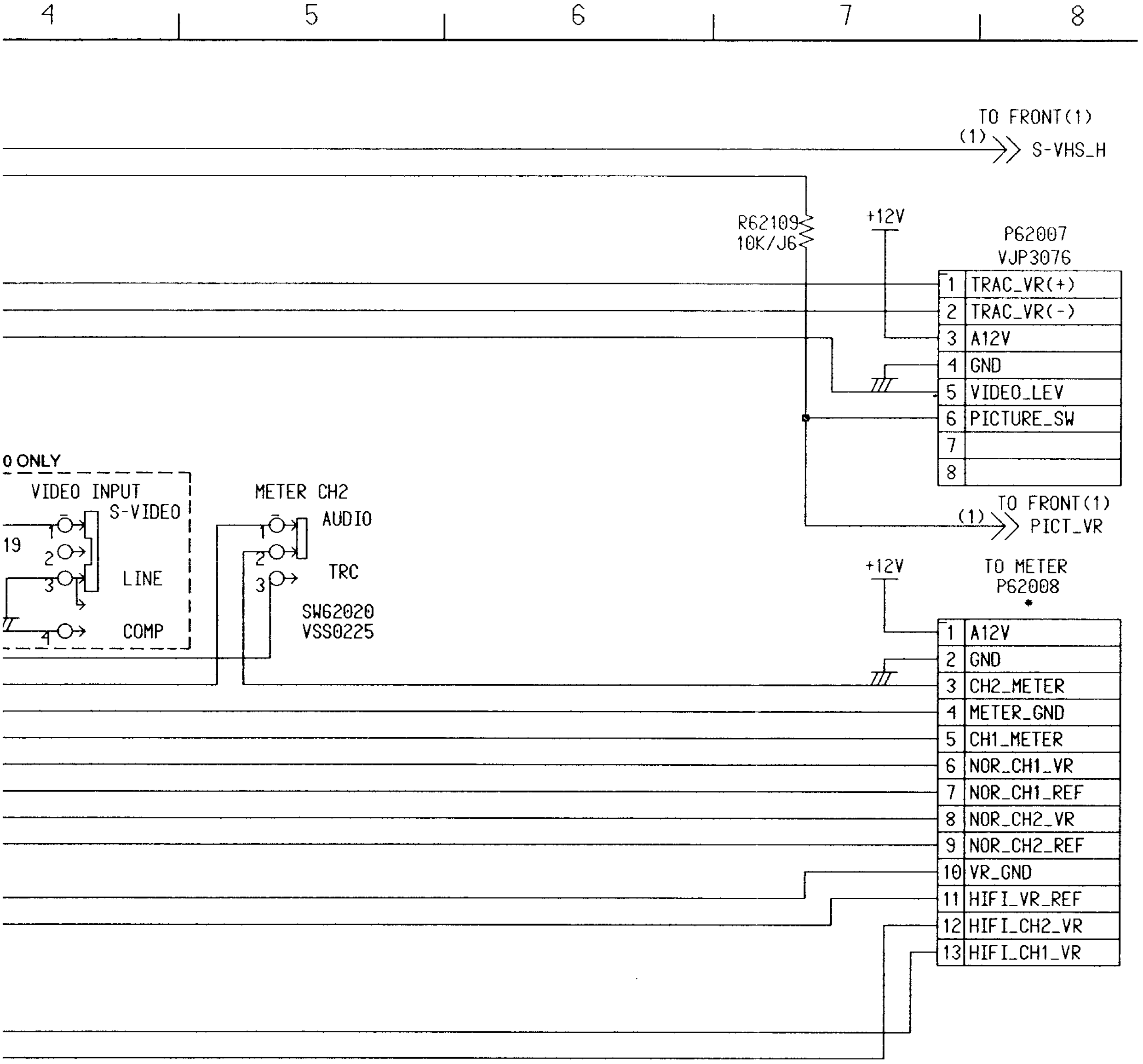
4
5
6
7
8
TO FRONT(1)
(1)
S-VHS_H
R62109
10K/J6
+12V
P62007
VJP3076
1 TRAC_VR(+)
2 TRAC_VR(-)
3 A12V
4 GND
5 VIDEO_LEV
6 PICTURE_SW
7
8
0 ONLY
VIDEO INPUT
S-VIDEO
19
LINE
COMP
METER CH2
AUDIO
TRC
SW62020
VSS0225
TO FRONT(1)
(1)
PICT_VR
+12V
TO METER
P62008
1 A12V
2 GND
3 CH2_METER
4 METER_GND
5 CH1_METER
6 NOR_CH1_VR
7 NOR_CH1_REF
8 NOR_CH2_VR
9 NOR_CH2_REF
10 VR_GND
11 HIFI_VR_REF
12 HIFI_CH2_VR
13 HIFI_CH1_VR

FRONT COMPARISON CHART 4/4
(E16: Page CBA-12)

REF	AG-8700	AG-8600	ON
C62006	*PAT/EVV	*PAT/EVV	50V22/EVV
D62001	*PAT	*PAT	11EQS04TA1
D62003	*PAT	*PAT	MA700A-TA
D62004	*PAT	*PAT	MA4300-L
D62013	MA151K-TX	MA151K-TX	MA151K-TX
D62014	MA151K-TX	MA151K-TX	MA151K-TX
D62015	MA151K-TX	MA151K-TX	MA151K-TX
D62016	MA151K-TX	MA151K-TX	MA151K-TX
D62018	MA151K-TX	MA151K-TX	MA151K-TX
D62021	MA151K-TX	MA151K-TX	MA151K-TX
D62048	MA151K-TX	*PAT	MA151K-TX
D62049	*PAT	*PAT	MA151K-TX
D62050	MA151K-TX	MA151K-TX	MA151K-TX
J62001	*PAT/J6	*PAT/J6	0/J6
J62002	0/J6	0/J6	0/J6
J62003	*PAT/J6	*PAT/J6	0/J6
J62004	0/J6	0/J6	0/J6
J62006	*PAT/J6	0/J6	0/J6
P62006	VJS2949B010	VJS2949B010	VJS2949B010
P62008	VJP1394T	VJP3530	VJP1394T
Q62001	*PAT	*PAT	2SB642-RT2
Q62009	MSB710-RT2	*PAT	MSB710-RT2
R62002	*PAT/J14	*PAT/J14	1500/J14
R62060	*PAT/J14	*PAT/J14	1000/J14
R62086	100K/J6	*PAT/J6	100K/J6
R62087	1000/J6	*PAT/J6	1000/J6
R62104	47/J14	*PAT/J14	47/J14
R62105	33/J14	*PAT/J14	33/J14
R62106	33/J14	*PAT/J14	33/J14
R62107	33/J14	*PAT/J14	33/J14
SW62014	VSS0225	VSS0225	VSS0225
SW62016	VSS0324	VSS0324	VSS0324
SW62017	VSS0324	VSS0225	VSS0324
SW62018	VSS0225	VSS0225	VSS0324
SW62019	VSS0225	*PAT	VSS0324
TP62001	*PAT	*PAT	AVSD1
TP62002	*PAT	*PAT	AVSD2
TP62003	*PAT	*PAT	AVSD3
TP62005	*PAT	*PAT	AVSD5
TP62006	*PAT	*PAT	AVSD6
TP62007	*PAT	*PAT	AVSD7
TP62008	*PAT	*PAT	AVSD8
TP62009	*PAT	*PAT	AVSD9
TP62010	*PAT	*PAT	AVSD10
TP62011	*PAT	*PAT	AVSD11
TP62012	*PAT	*PAT	AVSD12

Y MEMORY SCHEMATIC DIAGRAM 1/9 (E11: Page CBA-9)

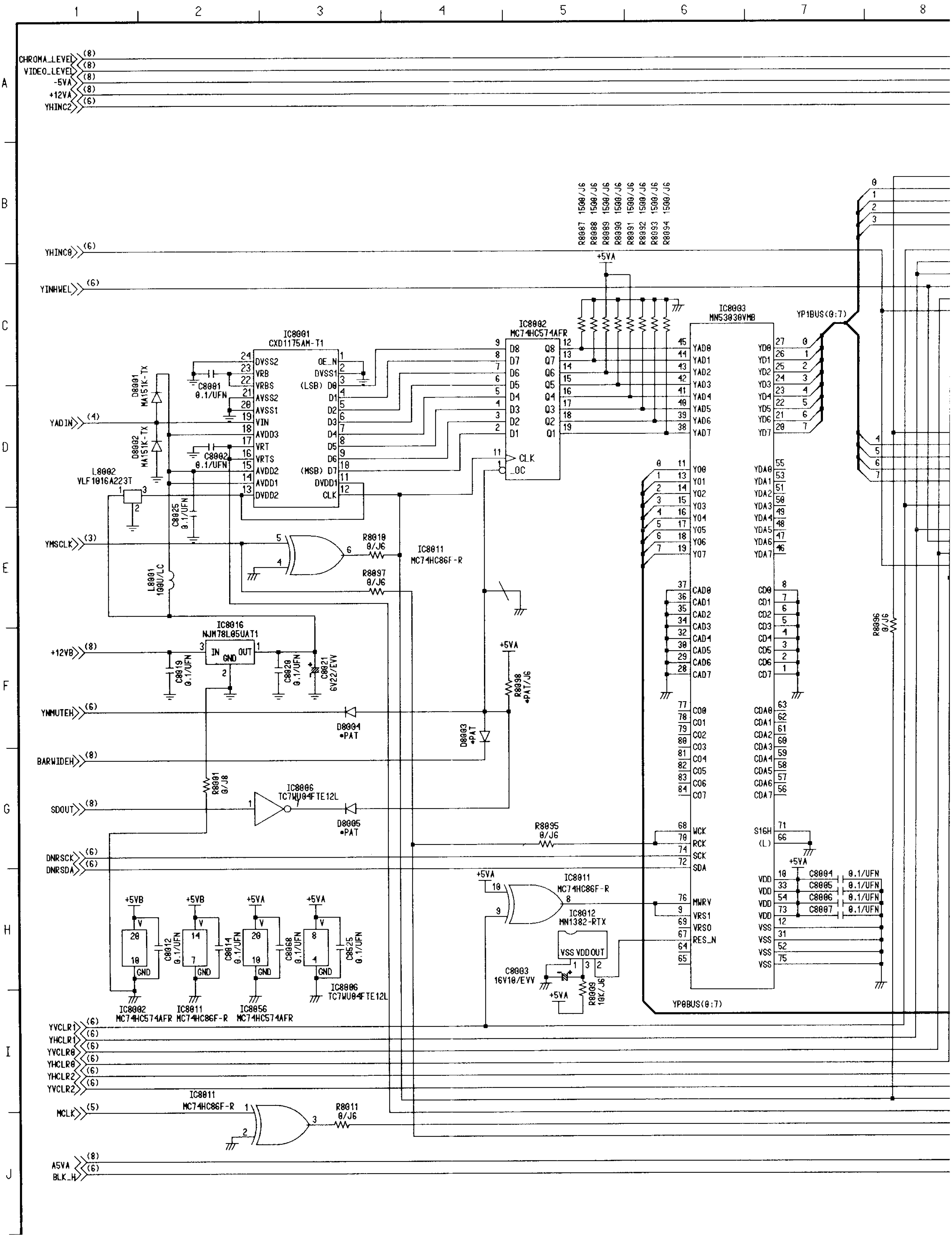

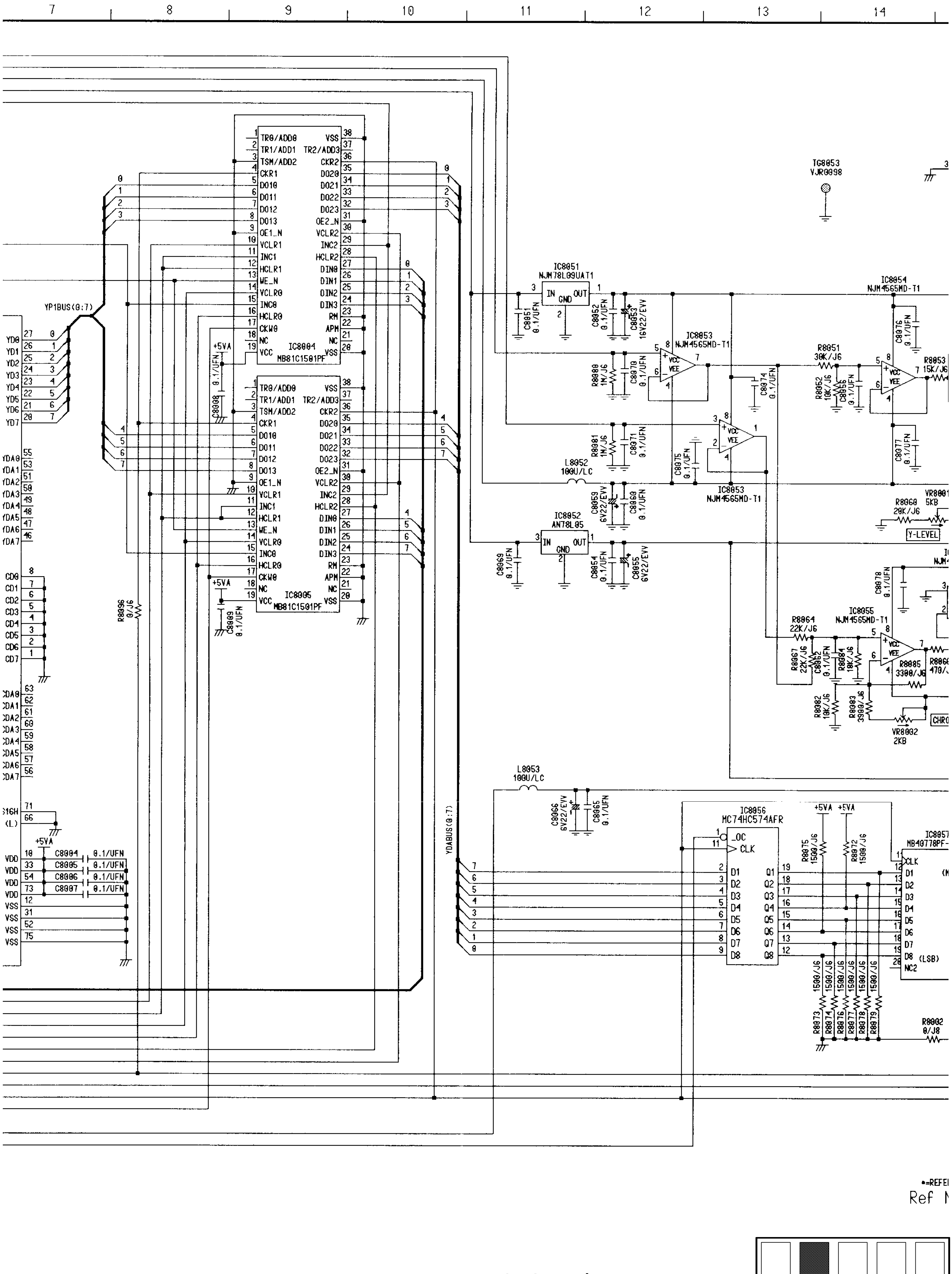
7 8 9 10 11 12 13 14
IC8004
MB81C1501PF
IC8005
MB81C1501PF
YP1BUS(0:7)
YDABUS(0:7)
IC8051
NJM78L09UAT1
IC8052
AN78L05
IC8053
NJM4565MD-T1
IC8054
NJM4565MD-T1
IC8055
NJM4565MD-T1
IC8056
MC74HC574AFR
IC8057
MB40778PF-
TG8053
VJR0098
L8052
100U/LC
L8053
100U/LC
Y-LEVEL
VR8001
5KB
VR8002
2KB
+5VA
(LSB)

12 13 14 15 16

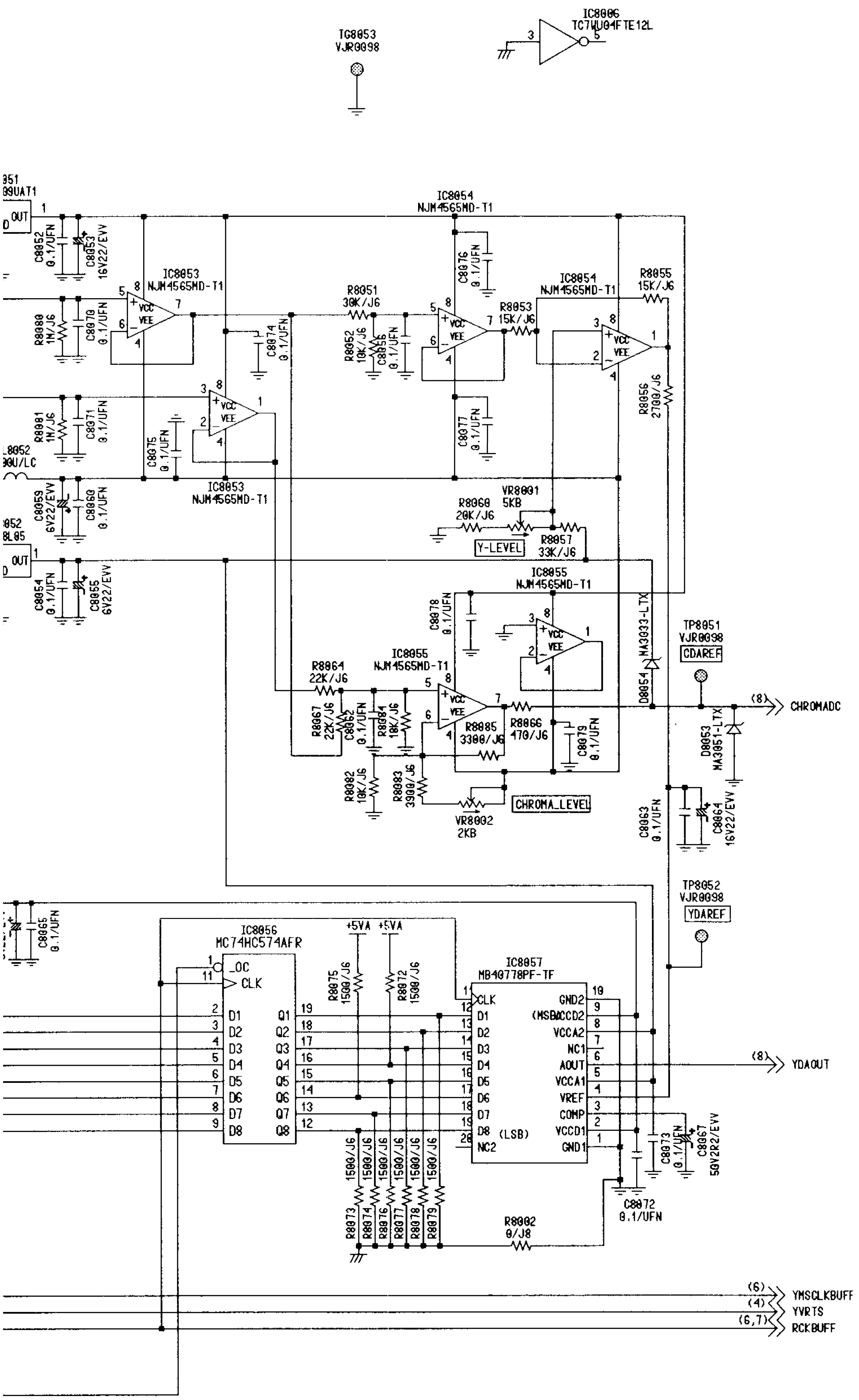

*=REFER TO THE COMPARISON CHART

Ref No.8000 Series.

Y MEMORY DC VOLTAGE CHART

REF. NO.	IC8001																			
MODE	1	2	3	4	5	6	7	8	9	10	11	12	13	14	15	16	17	18	19	20
EJECT	0	0	1.9	1.9	1.6	1.8	3.7	1.7	0.9	1.4	5.0	2.4	5.0	5.0	5.0	2.7	2.7	5.0	1.2	0
REC	0	0	1.9	2.1	1.7	1.9	3.7	1.7	0.9	1.4	5.0	2.4	5.0	5.0	5.0	2.7	2.7	5.0	1.2	0
REF. NO.	IC8001																			
MODE	21	22	23	24																
EJECT	0	0.6	0.6	0																
REC	0	0.6	0.6	0																
REF. NO.	IC8002																			
MODE	1	2	3	4	5	6	7	8	9	10	11	12	13	14	15	16	17	18	19	20
EJECT	0	1.3	0.9	1.5	3.6	1.9	1.6	1.9	1.8	0	2.4	2.4	2.3	2.0	2.0	3.8	1.6	0.9	1.3	5.1
REC	0	1.4	0.9	1.5	3.7	1.9	1.7	2.1	1.9	0	2.4	2.4	2.4	2.0	2.0	3.8	1.6	0.9	1.3	5.1
REF. NO.	IC8003																			
MODE	1	2	3	4	5	6	7	8	9	10	11	12	13	14	15	16	17	18	19	20
EJECT	0	0	0	0	0	0	0	0	5.1	5.2	2.5	0	2.4	1.9	2.1	3.8	1.6	1.0	1.5	1.3
REC	0	0	0	0	0	0	0	0	5.1	5.2	2.5	0	2.5	2.0	2.0	3.8	1.7	1.0	1.4	1.3
REF. NO.	IC8003																			
MODE	21	22	23	24	25	26	27	28	29	30	31	32	33	34	35	36	37	38	39	40
EJECT	0.9	1.6	3.7	1.9	1.8	2.3	2.3	0	0	0	0	0	5.2	0	0	0	0	1.4	0.9	1.7
REC	0.9	1.6	3.6	1.9	1.8	2.3	2.3	0	0	0	0	0	5.2	0	0	0	0	1.4	0.9	1.6
REF. NO.	IC8003																			
MODE	41	42	43	44	45	46	47	48	49	50	51	52	53	54	55	56	57	58	59	60
EJECT	3.8	1.9	2.0	2.3	2.4	1.4	0.9	1.7	3.8	2.0	2.0	0	2.4	5.2	2.5	0	0	0	0	0
REC	3.8	1.9	2.0	2.4	2.4	1.4	1.0	1.7	3.8	2.0	2.0	0	2.5	5.2	2.5	0	0	0	0	0
REF. NO.	IC8003																			
MODE	61	62	63	64	65	66	67	68	69	70	71	72	73	74	75	76	77	78	79	80
EJECT	0	0	0	0	0	0	5.2	1.5	5.2	1.5	0	0	5.2	5.2	0	5.1	0	0	0	0
REC	0	0	0	0	0	0	5.1	1.5	5.2	1.5	0	0	5.2	5.2	0	5.1	0	0	0	0
REF. NO.	IC8003																			
MODE	81	82	83	84																
EJECT	0	0	0	0																
REC	0	0	0	0																
REF. NO.	IC8004																			
MODE	1	2	3	4	5	6	7	8	9	10	11	12	13	14	15	16	17	18	19	20
EJECT	0.4	0.3	0	2.4	2.3	2.3	1.8	1.9	0	0	0	0	0	0	0	0	1.5	0	0	0
REC	0.4	0.3	0	2.4	2.3	2.1	1.8	1.9	0	0	0	0	0	0	0	0	1.5	0	5.2	0
REF. NO.	IC8004																			
MODE	21	22	23	24	25	26	27	28	29	30	31	32	33	34	35	36	37	38		
EJECT	0	0	0	2.1	1.9	2.4	2.5	0	0	0	0	1.9	1.8	2.3	2.4	2.6	0.3	0		
REC	0	0	0	1.7	2.7	2.1	2.5	0	0	0	0	1.6	2.1	2.3	2.4	2.6	0.3	0		
REF. NO.	IC8005																			
MODE	1	2	3	4	5	6	7	8	9	10	11	12	13	14	15	16	17	18	19	20
EJECT	0.4	0.3	0	2.4	3.3	1.6	1.0	0	0	0	0	0	0	0	0	0	1.5	0	5.2	0
REC	0.4	0.3	0	2.4	3.3	1.6	1.1	1.1	0	0	0	0	0	0	0	0	1.5	0	5.2	0
REF. NO.	IC8005																			
MODE	21	22	23	24	25	26	27	28	29	30	31	32	33	34	35	36	37	38		
EJECT	0	0	0	0	1.0	1.7	3.8	0	0	0	0	1.3	0.9	1.6	3.8	2.6	0.3	0		
REC	0	0	0	1.3	1.2	1.8	3.8	0	0	0	0	1.1	1.0	1.8	3.7	2.6	0.3	0		
REF. NO.	IC8006																			
MODE	1	2	3	4	5	6	7	8												
EJECT	0.2	2.5	0	0	5.2	2.6	5.2	5.2												
REC	0.2	2.5	0	0	5.2	2.7	5.2	5.2												
REF. NO.	IC8011																			
MODE	1	2	3	4	5	6	7	8	9	10	11	12	13	14						
EJECT	1.5	0	2.6	0	1.5	2.4	0	5.1	0	0	5.1	4.6	0	5.1						
REC	1.5	0	2.6	0	1.5	2.4	0	5.1	0	5.2	0	0.1	0	5.1						
REF. NO.	IC8012										IC8016									
MODE	1	2	3								I	G	O							
EJECT	0	5.1	5.1								11.5	0	5.0							
REC	0	5.1	5.1								11.5	0	5.0							

REF. NO.	IC8051					IC8052				
MODE	I	G	O			I	G	O		
EJECT	11.6	0	9.1			11.6	0	5.1		
REC	11.6	0	9.1			11.6	0	5.1		
REF. NO.	IC8053									
MODE	1	2	3	4	5	6	7	8		
EJECT	0	0	0	−5.0	0	0	0	9.1		
REC	0	0	0	−5.0	0	0	0	9.1		
REF. NO.	IC8054									
MODE	1	2	3	4	5	6	7	8		
EJECT	4.1	2.0	2.0	−5.0	0	0	0	9.1		
REC	4.1	2.0	2.0	−5.0	0	0	0	9.1		
REF. NO.	IC8055									
MODE	1	2	3	4	5	6	7	8		
EJECT	0	0	0	−5.0	0	0	3.6	9.1		
REC	0	0	0	−5.0	0	0	3.6	9.1		
REF. NO.	IC8056									
MODE	1	2	3	4	5	6	7	8	9	10
EJECT	1.1	1.3	0.9	1.7	3.8	2.0	1.9	2.4	2.4	0
REC	1.1	1.3	0.9	1.6	3.8	1.9	1.9	2.4	2.4	0
REF. NO.	IC8056									
MODE	11	12	13	14	15	16	17	18	19	20
EJECT	2.6	2.1	2.0	2.9	2.0	4.3	1.6	1.0	1.4	5.2
REC	2.6	2.1	2.1	2.9	2.0	4.3	1.6	1.0	1.4	5.2
REF. NO.	IC8057									
MODE	1	2	3	4	5	6	7	8	9	10
EJECT	0	4.8	2.7	4.1	5.1	4.2	0	5.1	4.8	0
REC	0	4.8	2.7	4.1	5.1	4.2	0	5.1	4.8	0
REF. NO.	IC8057									
MODE	11	12	13	14	15	16	17	18	19	20
EJECT	2.6	1.4	1.0	1.6	4.2	2.0	2.9	2.0	2.2	0
REC	2.6	1.4	1.0	1.7	4.3	2.0	2.8	1.8	2.2	0

IC8001
CXD1175M

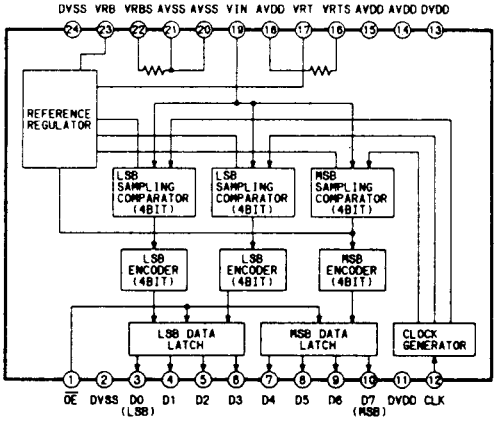

IC8012
MN1382-RTW

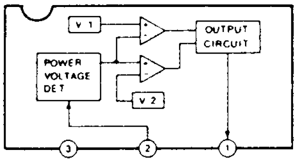

PB SYNC SEP SCHEMATIC DIAGRAM 2/9 (E11: Page CBA-9)

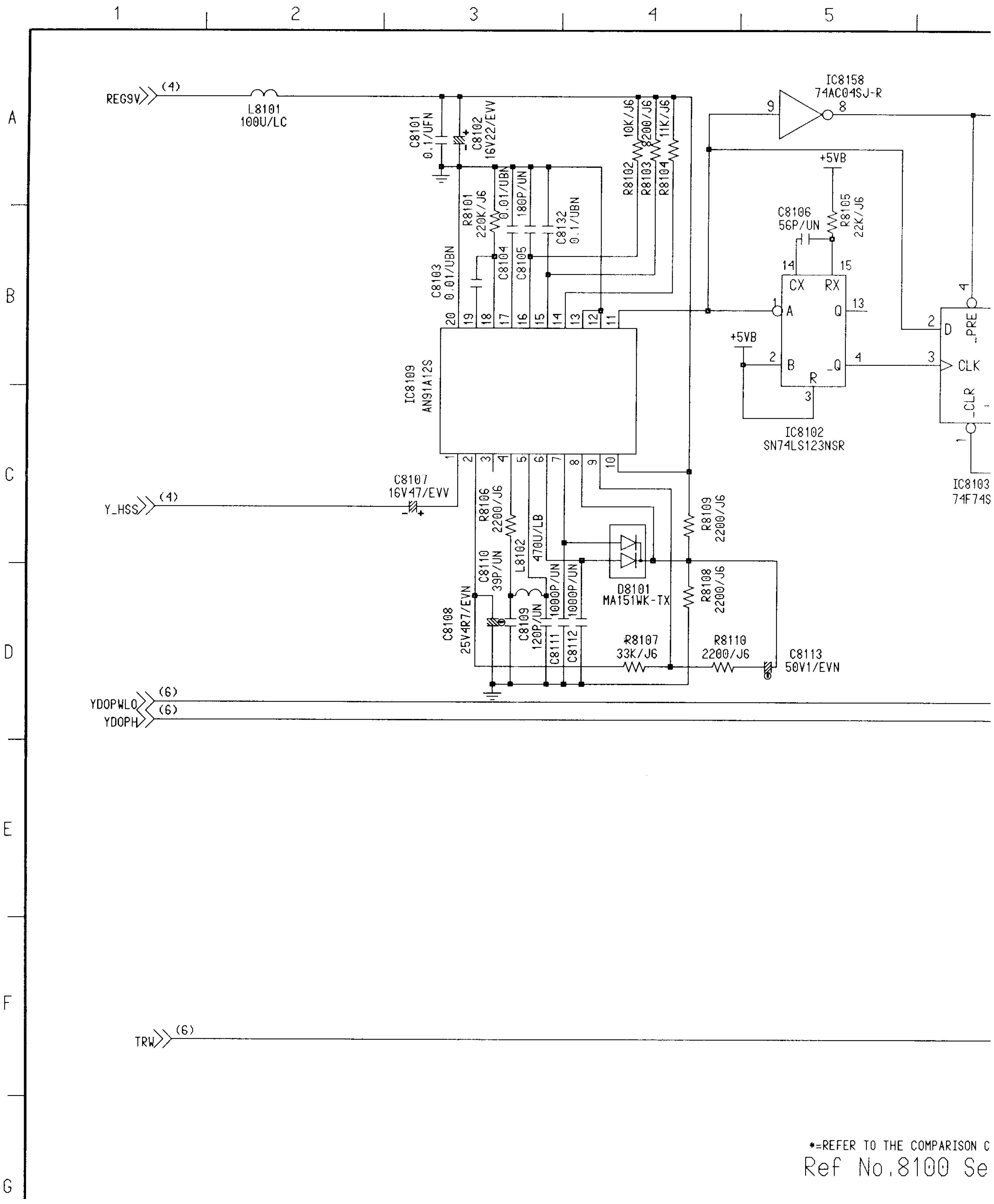

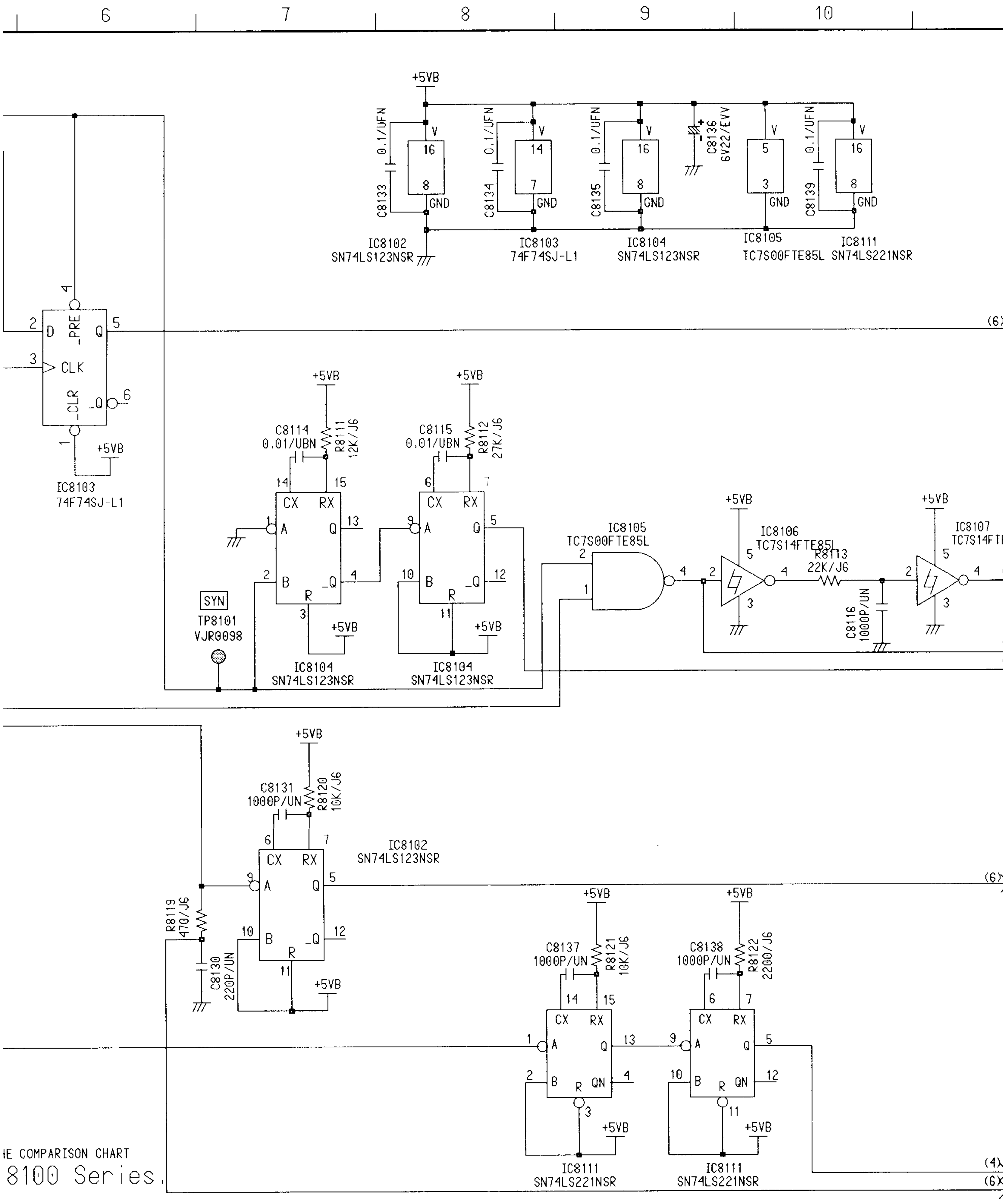
6
7
8
9
10
+5VB
0.1/UFN
C8133
IC8102
SN74LS123NSR
C8134
IC8103
74F74SJ-L1
C8135
IC8104
SN74LS123NSR
C8136
6V22/EVV
IC8105
TC7S00FTE85L
C8139
IC8111
SN74LS221NSR
D
_PRE
Q
CLK
_CLR
_Q
IC8103
74F74SJ-L1
C8114
0.01/UBN
R8111
12K/J6
C8115
0.01/UBN
R8112
27K/J6
CX
RX
A
B
R
SYN
TP8101
VJR0098
IC8104
SN74LS123NSR
IC8105
TC7S00FTE85L
IC8106
TC7S14FTE85L
R8113
22K/J6
C8116
1000P/UN
IC8107
(6)
C8131
1000P/UN
R8120
10K/J6
IC8102
SN74LS123NSR
R8119
470/J6
C8130
220P/UN
C8137
1000P/UN
R8121
10K/J6
C8138
1000P/UN
R8122
2200/J6
QN
IC8111
SN74LS221NSR
(4)
IE COMPARISON CHART
8100 Series.

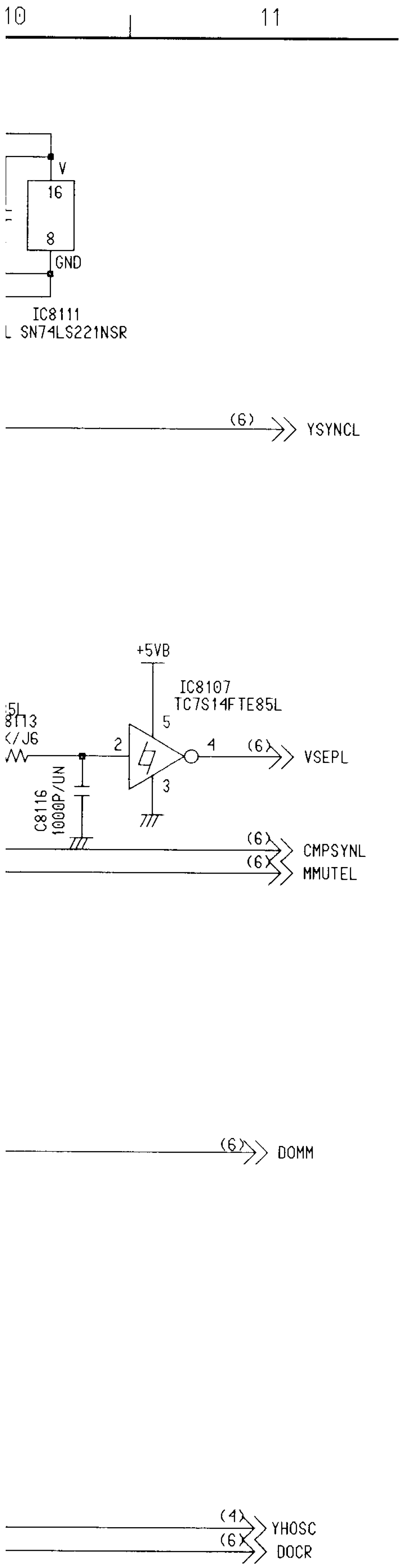

PB SYNC SEP DC VOLTAGE CHART

REF. NO.	IC8102									
MODE	1	2	3	4	5	6	7	8	9	10
EJECT	4.8	5.1	5.1	4.5	0.1	0	1.6	0	0	5.1
REC	4.8	5.1	5.1	4.5	0.1	0	1.6	0	0	5.1
REF. NO.	IC8102									
MODE	11	12	13	14	15	16				
EJECT	5.1	4.6	0.1	0	1.3	5.1				
REC	5.1	4.6	0.1	0	1.3	5.1				
REF. NO.	IC8103									
MODE	1	2	3	4	5	6	7	8	9	10
EJECT	5.1	4.9	4.5	0	4.3	0.5	0	1.8	1.8	5.1
REC	5.1	4.8	4.5	0.4	4.3	0.5	0	1.7	1.7	5.1
REF. NO.	IC8103									
MODE	11	12	13	14						
EJECT	2.7	1.8	5.1	5.1						
REC	2.8	1.7	5.1	5.1						
REF. NO.	IC8104									
MODE	1	2	3	4	5	6	7	8	9	10
EJECT	0	0.4	5.1	1.8	5.0	0	1.2	0	1.8	5.1
REC	0	0.4	5.1	1.8	5.0	0	1.2	0	1.8	5.1
REF. NO.	IC8104									
MODE	11	12	13	14	15	16				
EJECT	5.1	0.2	2.8	0	1.5	5.1				
REC	5.1	0.2	2.8	0	1.5	5.1				
REF. NO.	IC8105									
MODE	1	2	3	4	5					
EJECT	5.2	2.4	0	4.7	5.1					
REC	5.2	0.4	0	4.7	5.1					
REF. NO.	IC8106									
MODE	1	2	3	4	5					
EJECT	0	4.7	0	0.4	5.1					
REC	0	4.7	0	0.4	5.1					
REF. NO.	IC8107									
MODE	1	2	3	4	5					
EJECT	0	0.4	0	5.0	5.1					
REC	0	0.4	0	5.0	5.1					
REF. NO.	IC8109									
MODE	1	2	3	4	5	6	7	8	9	10
EJECT	3.8	4.1	5.2	5.9	5.9	3.4	4.5	4.5	4.2	8.9
REC	3.8	4.1	5.2	5.9	5.9	3.4	4.5	4.5	4.2	8.9
REF. NO.	IC8109									
MODE	11	12	13	14	15	16	17	18	19	20
EJECT	4.9	0	0	8.0	8.0	7.1	6.7	4.0	5.9	0
REC	4.9	0	0	8.0	8.0	7.1	6.7	4.0	5.9	0
REF. NO.	IC8111									
MODE	1	2	3	4	5	6	7	8	9	10
EJECT	2.6	5.1	5.1	3.9	0.2	4.9	1.2	0	0.6	5.1
REC	2.6	5.1	5.1	3.9	0.2	4.9	1.2	0	0.6	5.1
REF. NO.	IC8111									
MODE	11	12	13	14	15	16				
EJECT	5.1	4.3	0.6	4.5	0.6	5.1				
REC	5.1	4.3	0.6	4.5	0.6	5.1				

IC8109
AN91A12S

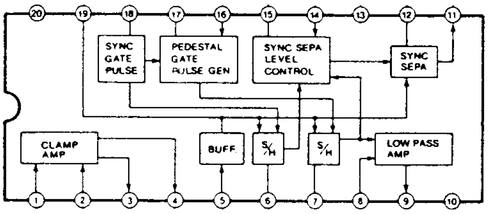

WRITE PLL SCHEMATIC DIAGRAM 3/9 (E11: Page CBA-9)

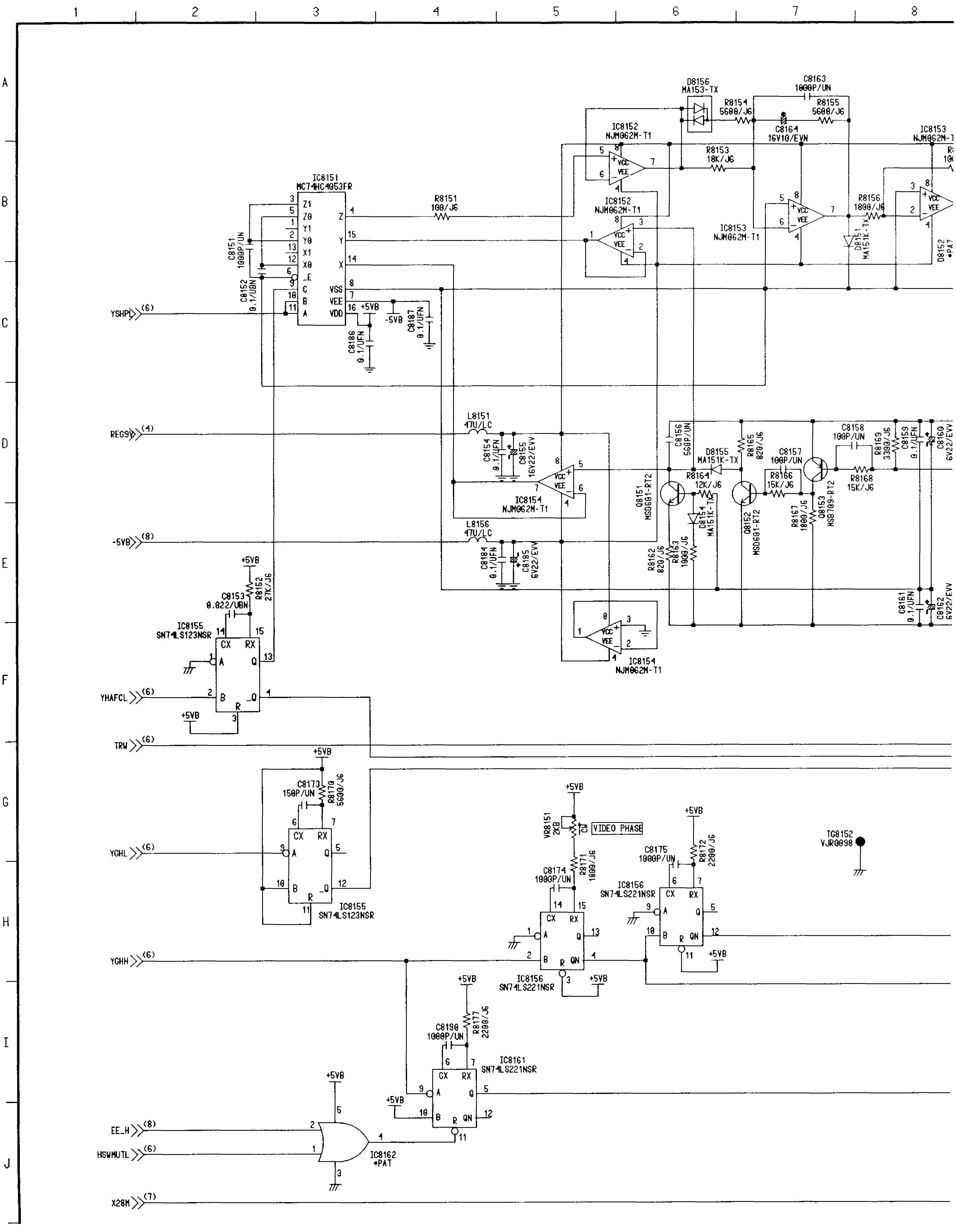

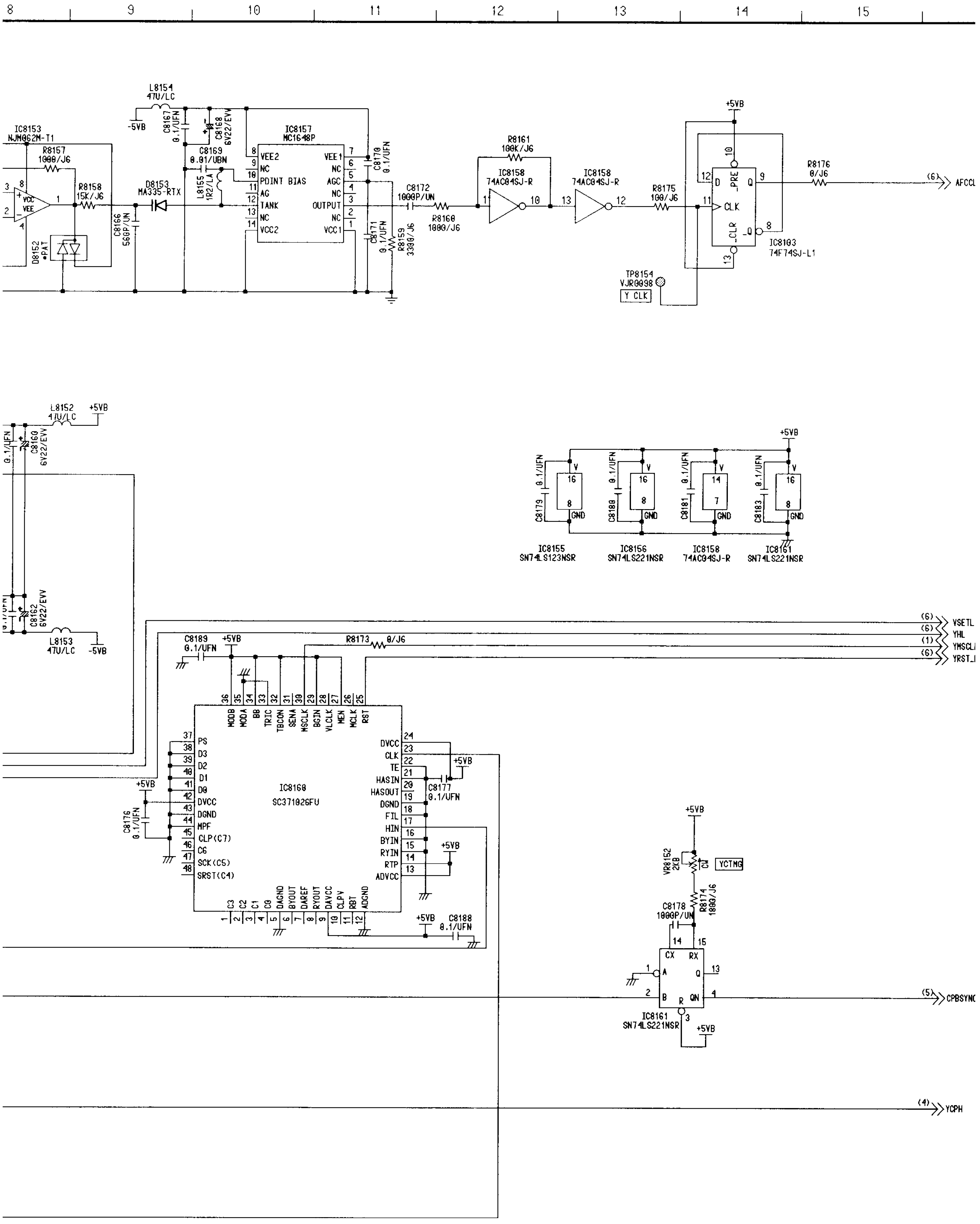

Ref NO.8100 Series.

WRITE PLL DC VOLTAGE CHART

REF. NO.	IC8151									
MODE	1	2	3	4	5	6	7	8	9	10
EJECT	0.5	0	0	0	0	0	−5.0	0	4.6	5.1
REC	0.5	0	0	0	0	0	−5.0	0	4.5	5.1

REF. NO.	IC8151									
MODE	11	12	13	14	15	16				
EJECT	5.1	0	0.5	0.5	0.5	5.1				
REC	5.1	0	0.5	0.5	0.5	5.1				

REF. NO.	IC8152									
MODE	1	2	3	4	5	6	7	8		
EJECT	0.5	0.5	0.7	−5.0	0	0	0	9.0		
REC	0.5	0.5	0.7	−5.0	0	0	0	9.0		

REF. NO.	IC8153									
MODE	1	2	3	4	5	6	7	8		
EJECT	1.0	0	0	−5.0	0	0	−1.8	9.0		
REC	1.0	0	0	−5.0	0	0	−1.8	9.0		

REF. NO.	IC8154									
MODE	1	2	3	4	5	6	7	8		
EJECT	0	0	0	−5.0	0.7	0.5	0.5	9.0		
REC	0	0	0	−5.0	0.7	0.5	0.5	9.0		

REF. NO.	IC8155									
MODE	1	2	3	4	5	6	7	8	9	10
EJECT	0	5.1	5.1	0.2	0.1	0	1.9	0	4.9	5.1
REC	0	5.1	5.1	0.2	0.1	0	1.8	0	4.9	5.1

REF. NO.	IC8155									
MODE	11	12	13	14	15	16				
EJECT	5.1	4.5	4.5	0	1.0	5.1				
REC	5.1	4.5	4.5	0	1.0	5.1				

REF. NO.	IC8156									
MODE	1	2	3	4	5	6	7	8	9	10
EJECT	0	0.3	5.1	4.3	0.2	4.9	1.2	0	0	4.3
REC	0	0.3	5.1	4.3	0.2	4.9	1.2	0	0	4.3

REF. NO.	IC8156									
MODE	11	12	13	14	15	16				
EJECT	5.1	4.3	0.2	4.9	1.2	5.1				
REC	51.	4.3	0.2	4.9	1.2	5.1				

REF. NO.	IC8157									
MODE	1	2	3	4	5	6	7	8	9	10
EJECT	0	0	−1.2	0	−3.6	0	−5.0	−5.0	0	−3.4
REC	0	0	−1.2	0	−3.6	0	−5.0	−5.0	0	−3.4

REF. NO.	IC8157									
MODE	11	12	13	14						
EJECT	0	−3.4	0	0						
REC	0	−3.4	0	0						

REF. NO.	IC8158									
MODE	1	2	3	4	5	6	7	8	9	10
EJECT	4.9	0	2.5	2.5	0.4	4.7	0	0.4	4.9	2.8
REC	4.9	0	2.5	2.5	0.4	4.7	0	0.4	4.9	2.7

REF. NO.	IC8158									
MODE	11	12	13	14						
EJECT	2.5	2.9	2.8	5.1						
REC	2.5	2.8	2.7	5.1						

REF. NO.	IC8160									
MODE	1	2	3	4	5	6	7	8	9	10
EJECT	0	0	0	0	0	0.4	1.6	0.4	5.1	3.5
REC	0	0	0	0	0	0.4	1.6	0.4	5.1	3.5

REF. NO.	IC8160									
MODE	11	12	13	14	15	16	17	18	19	20
EJECT	2.1	0	5.1	5.1	0	0	4.3	0	0	0
REC	2.1	0	5.1	5.1	0	0	4.3	0	0	0

REF. NO.	IC8160									
MODE	21	22	23	24	25	26	27	28	29	30
EJECT	0	0	2.7	5.1	3.8	1.5	5.1	1.5	5.1	1.5
REC	0	0	2.8	5.1	3.7	1.5	5.1	1.5	5.1	1.5

REF. NO.	IC8160									
MODE	31	32	33	34	35	36	37	38	39	40
EJECT	0.2	5.1	0	5.1	0	5.1	0	0	0	0
REC	0.2	5.1	0	5.1	0	5.1	0	0	0	0

REF. NO.	IC8160									
MODE	41	42	43	44	45	46	47	48		
EJECT	0	5.1	0	0	0.1	0	1.4	3.9		
REC	0	5.1	0	0	0.1	0.1	1.5	3.7		

REF. NO.	IC8161									
MODE	1	2	3	4	5	6	7	8	9	10
EJECT	0	4.3	5.1	4.3	0.2	4.9	1.2	0	0.3	5.1
REC	0	4.3	5.1	4.3	0.2	4.9	1.2	0	0.3	5.1

REF. NO.	IC8161									
MODE	11	12	13	14	15	16				
EJECT	1.5	4.3	0.2	4.9	1.0	5.1				
REC	1.7	4.3	0.2	4.9	1.0	5.1				

REF. NO.	Q8151			Q8152			Q8153			
MODE	E	C	B	E	C	B	E	C	B	
EJECT	−4.7	0.7	−4.2	−5.0	−0.2	−4.6	5.1	0.1	4.7	
REC	−4.7	0.7	−4.2	−5.0	−0.2	−4.6	5.1	0.1	4.7	

(6) AFCCLK

(6) VSETL
(6) YHL
(1) YMSCLK
(6) YRST_L

(5) CPBSYNC_L

(4) YCPH

IC8160
SC371026FU

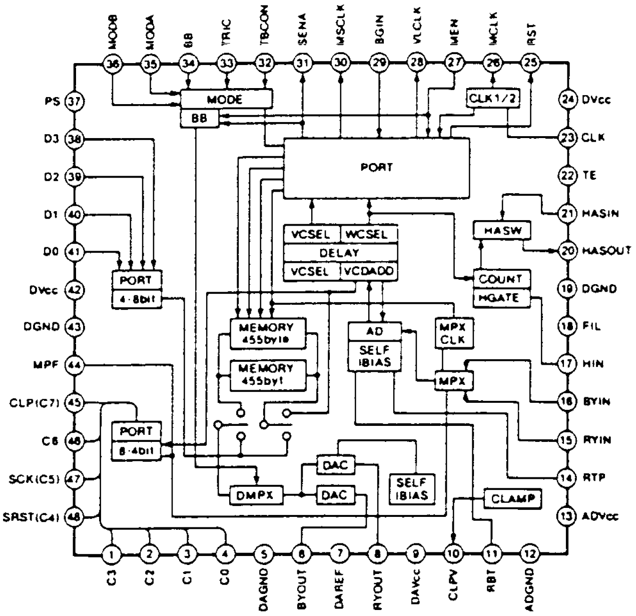

IC8151
MC74HC4053FR

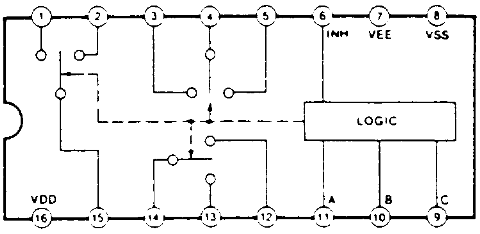

ries.

MC-Service

CLAMP & AMP SCHEMATIC DIAGRAM 4/9 (E11: Page CBA-9)

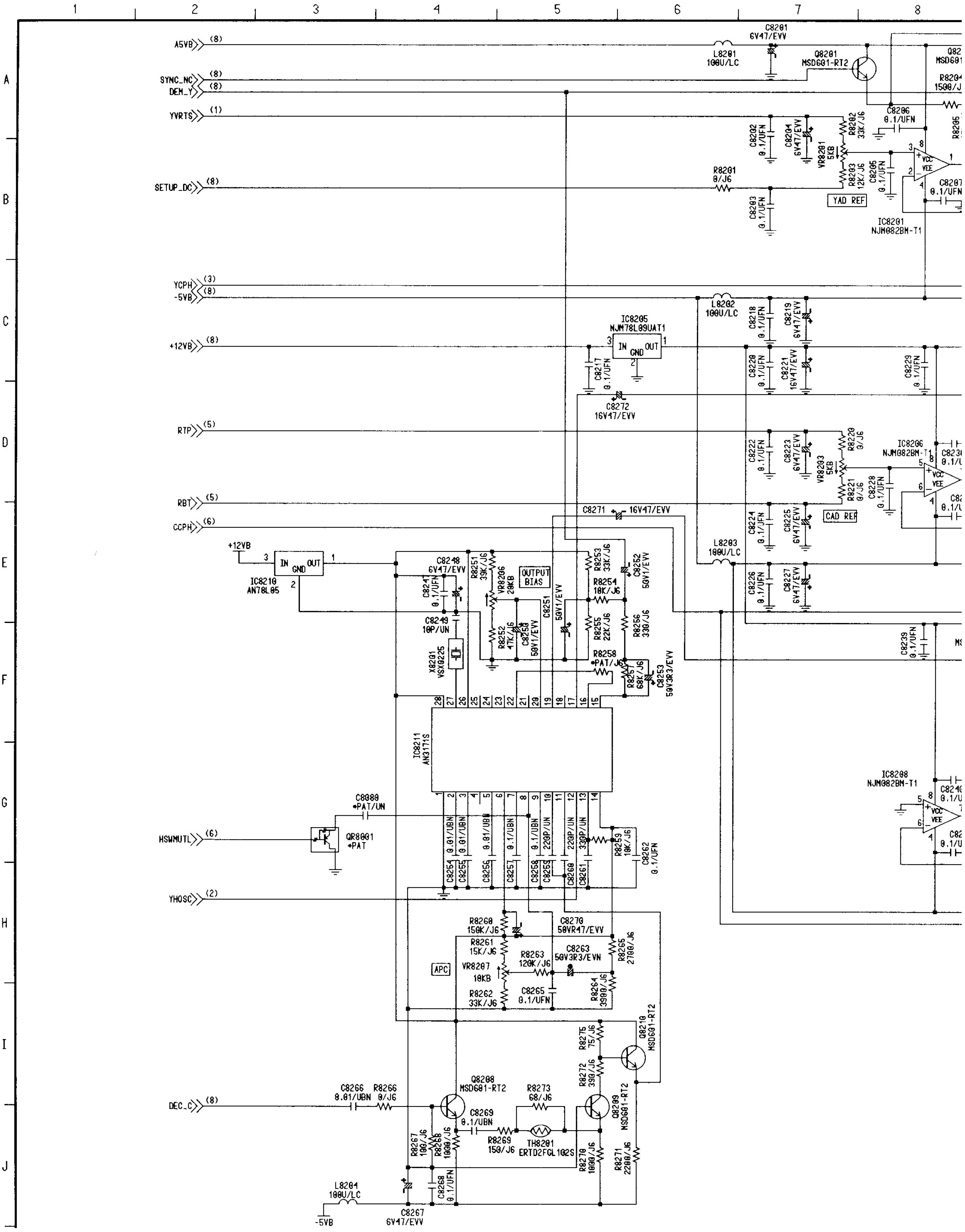

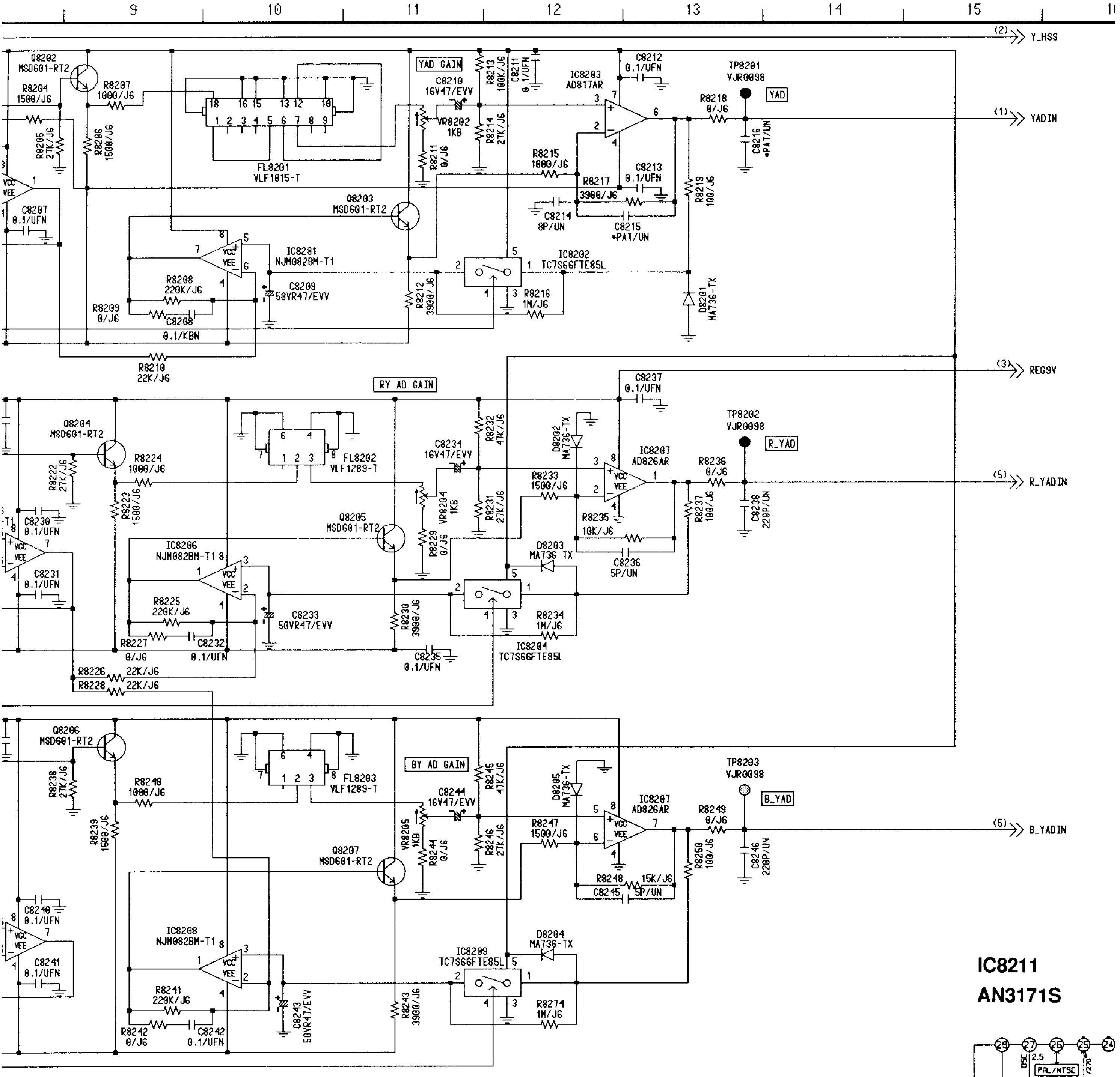

IC8211

AN3171S

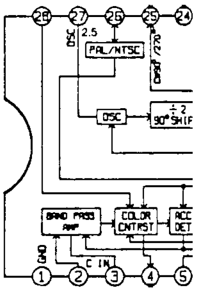

*=REFER TO THE COMPARISON CHART

Ref No.8200 Series.

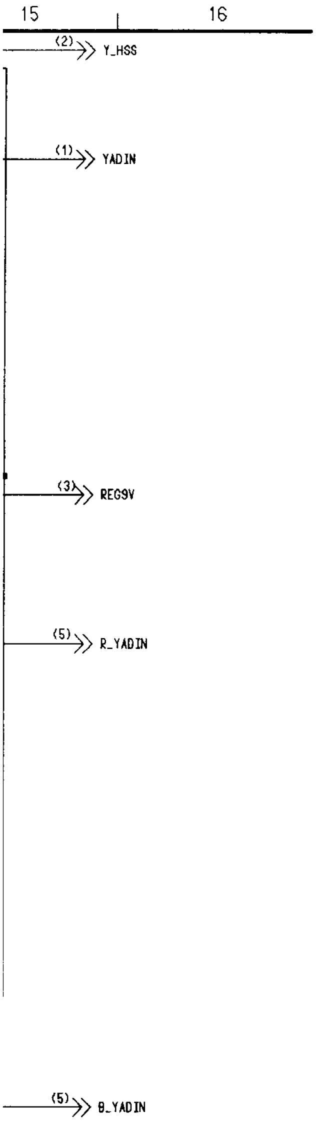

IC8211
AN3171S

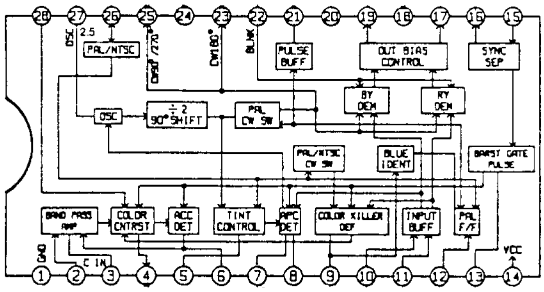

CLAMP & AMP DC VOLTAGE CHART

REF. NO.	IC8201									
MODE	1	2	3	4	5	6	7	8		
EJECT	0.7	0.7	0.7	−4.9	0.8	0.8	1.5	4.9		
REC	0.7	0.7	0.7	−4.9	0.8	0.8	1.5	4.8		
REF. NO.	IC8202									
MODE	1	2	3	4	5					
EJECT	1.2	0.8	0	0.2	4.9					
REC	1.2	0.8	0	0.2	4.8					
REF. NO.	IC8203									
MODE	1	2	3	4	5	6	7	8		
EJECT	−4.7	1.0	1.0	−4.9	0	1.2	4.9	−4.7		
REC	−4.7	1.0	1.0	−4.9	0	1.2	4.8	−4.7		
REF. NO.	IC8204									
MODE	1	2	3	4	5					
EJECT	3.6	3.5	0	0.1	4.8					
REC	3.6	3.5	0	0.1	4.8					
REF. NO.	IC8205									
MODE	I	G	O							
EJECT	11.6	0	9.0							
REC	11.5	0	9.0							
REF. NO.	IC8206									
MODE	1	2	3	4	5	6	7	8		
EJECT	3.8	3.5	3.5	−4.9	3.5	3.5	3.5	9.0		
REC	3.8	3.5	3.5	−4.9	3.5	3.5	3.5	9.0		
REF. NO.	IC8207									
MODE	1	2	3	4	5	6	7	8		
EJECT	3.6	3.2	3.2	0	3.2	3.2	3.5	9.0		
REC	3.6	3.2	3.2	0	3.2	3.2	3.5	9.0		
REF. NO.	IC8208									
MODE	1	2	3	4	5	6	7	8		
EJECT	3.8	3.5	3.5	−4.9	0	0	0	9.0		
REC	3.8	3.5	3.5	−4.9	0	0	0	9.0		
REF. NO.	IC8209									
MODE	1	2	3	4	5					
EJECT	3.5	3.5	0	0.1	4.8					
REC	3.5	3.5	0	0.1	4.8					
REF. NO.	IC8210									
MODE	I	G	O							
EJECT	11.5	0	5.1							
REC	11.5	0	5.1							
REF. NO.	IC8211									
MODE	1	2	3	4	5	6	7	8	9	10
EJECT	0	1.1	2.6	2.7	0	4.7	3.0	3.1	4.1	3.5
REC	0	1.0	2.5	2.7	0	4.7	3.0	3.1	4.1	3.5
REF. NO.	IC8211									
MODE	11	12	13	14	15	16	17	18	19	20
EJECT	3.4	0.2	4.5	5.1	3.4	0.5	3.3	0	3.3	2.8
REC	3.5	0.2	4.5	5.1	3.4	0.5	3.3	0	3.3	2.8
REF. NO.	IC8211									
MODE	21	22	23	24	25	26	27	28		
EJECT	0	0	2.9	0	2.9	5.1	2.5	5.1		
REC	0	0	3.0	0	3.0	5.1	2.5	5.1		
REF. NO.	Q8201			Q8202			Q8203			
MODE	E	C	B	E	C	B	E	C	B	
EJECT	0.3	4.8	1.0	0.4	4.8	1.0	0.9	4.8	1.5	
REC	0.3	4.8	0.9	0.4	4.8	1.0	0.9	4.8	1.5	
REF. NO.	Q8204			Q8205			Q8206			
MODE	E	C	B	E	C	B	E	C	B	
EJECT	−0.8	9.0	−0.2	3.2	9.0	3.8	−0.8	9.0	−0.2	
REC	−0.8	9.0	−0.2	3.2	9.0	3.8	−0.8	9.0	−0.2	
REF. NO.	Q8207			Q8208			Q8209			
MODE	E	C	B	E	C	B	E	C	B	
EJECT	3.2	9.0	3.8	−0.6	5.1	0	−0.6	3.0	0	
REC	3.2	9.0	3.8	−0.7	5.1	0	−0.7	3.0	0	
REF. NO.	Q8210									
MODE	E	C	B							
EJECT	4.1	5.1	4.7							
REC	4.1	5.1	4.7							

C MEMORY SCHEMATIC DIAGRAM 5/9 (E11: Page CBA-9)

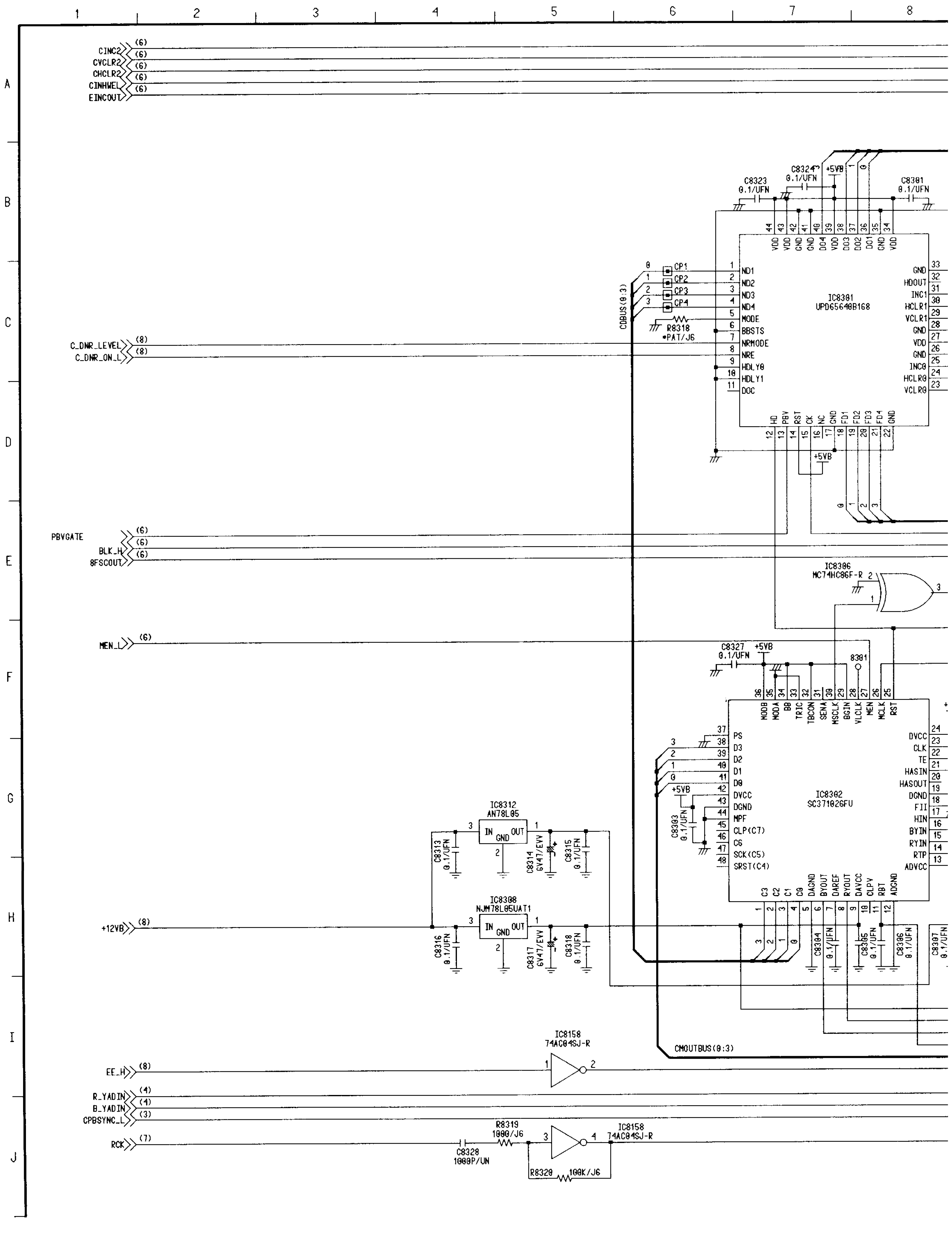

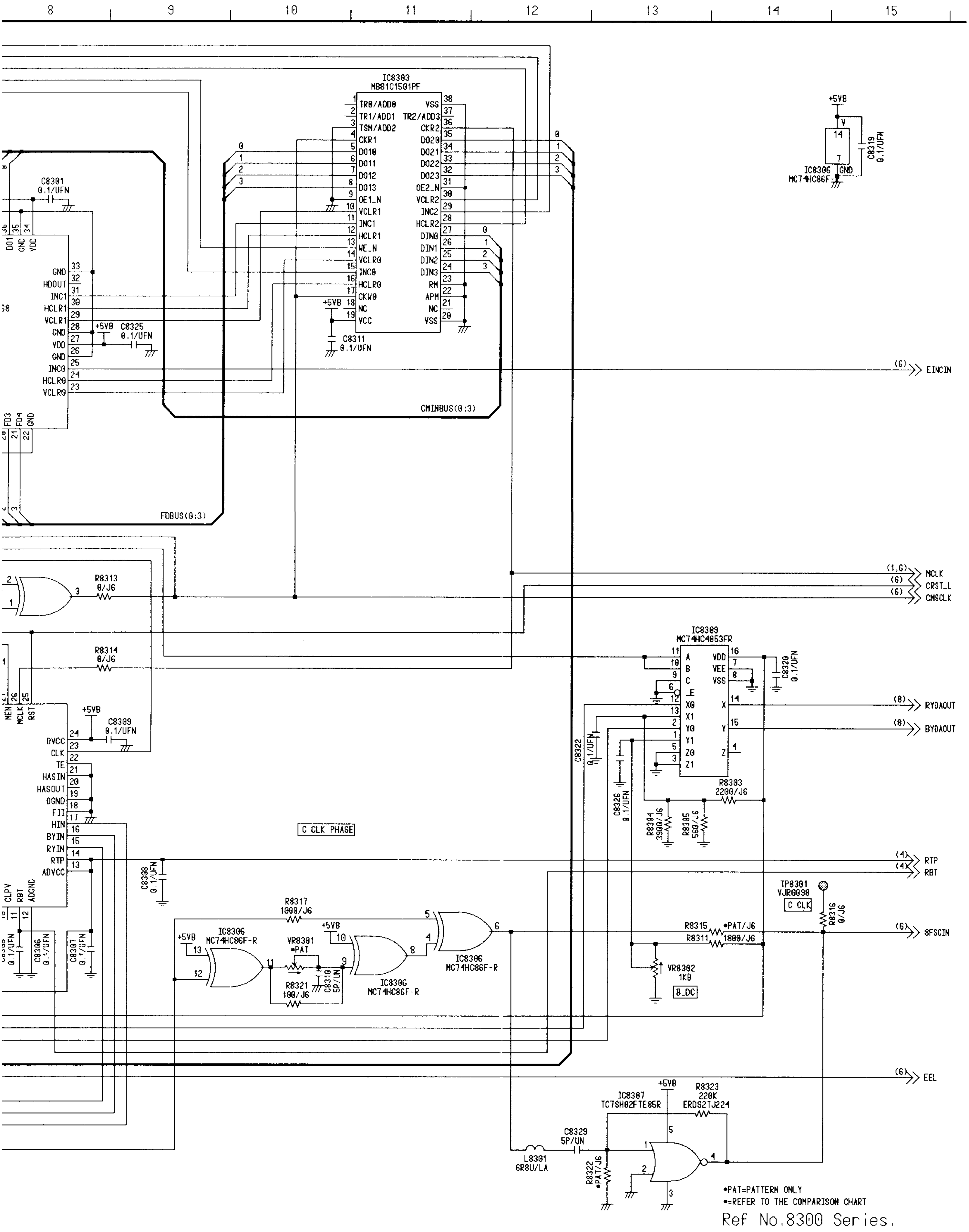

8
9
10
11
12
13
14
15
IC8303
MB81C1501PF
TR0/ADD0
TR1/ADD1
TSM/ADD2
CKR1
D010
D011
D012
D013
OE1_N
VCLR1
INC1
HCLR1
WE_N
VCLR0
INC0
HCLR0
CKW0
NC
VCC
VSS
TR2/ADD3
CKR2
D020
D021
D022
D023
OE2_N
VCLR2
INC2
HCLR2
DIN0
DIN1
DIN2
DIN3
RM
APM
NC
VSS
C8301
0.1/UFN
C8325
0.1/UFN
C8311
0.1/UFN
+5VB
GND
HDOUT
INC1
HCLR1
VCLR1
GND
VDD
GND
INC0
HCLR0
VCLR0
CMINBUS(0:3)
FDBUS(0:3)
(6) EINCIN
R8313
0/J6
R8314
0/J6
(1,6) MCLK
(6) CRST_L
(6) CMSCLK
IC8306
MC74HC86F
C8319
0.1/UFN
IC8309
MC74HC4053FR
A
B
C
_E
X0
X1
Y0
Y1
Z0
Z1
VDD
VEE
VSS
X
Y
Z
C8320
0.1/UFN
(8) RYDAOUT
(8) BYDAOUT
C8322
0.1/UFN
C8326
0.1/UFN
R8303
2200/J6
R8304
3900/J6
R8305
560/J6
C8309
0.1/UFN
DVCC
CLK
TE
HASIN
HASOUT
DGND
FII
HIN
BYIN
RYIN
RTP
ADVCC
MEN
MCLK
RST
CLPV
RBT
ADGND
C8308
0.1/UFN
C8306
0.1/UFN
C8307
0.1/UFN
C CLK PHASE
(4) RTP
(4) RBT
TP8301
VJR0098
C CLK
R8316
0/J6
R8317
1000/J6
IC8306
MC74HC86F-R
VR8301
*PAT
R8321
100/J6
C8310
5P/UN
R8315 *PAT/J6
R8311 1800/J6
VR8302
1KB
B_DC
(6) 8FSCIN
(6) EEL
IC8307
TC7SH02FTE85R
R8323
220K
ERDS2TJ224
C8329
5P/UN
L8301
6R8U/LA
R8322
*PAT/J6
*PAT=PATTERN ONLY
*=REFER TO THE COMPARISON CHART
Ref No.8300 Series.

C MEMORY DC VOLTAGE CHART

REF. NO. \ MODE	IC8158									
MODE	1	2	3	4	5	6	7	8	9	10
EJECT	4.9	0	2.5	2.5	0.4	4.7	0	0.4	4.9	2.8
REC	4.9	0	2.5	2.5	0.4	4.7	0	0.4	4.9	2.7
MODE	11	12	13	14						
EJECT	2.5	2.9	2.8	5.1						
REC	2.5	2.8	2.7	5.1						

REF. NO. \ MODE	IC8301									
MODE	1	2	3	4	5	6	7	8	9	10
EJECT	2.6	2.3	1.9	1.7	5.1	0	5.2	5.2	0	0
REC	2.5	2.3	1.9	1.7	5.1	0	5.2	5.2	0	0
MODE	11	12	13	14	15	16	17	18	19	20
EJECT	5.1	5.0	0	5.1	2.6	0	0	2.9	2.6	2.0
REC	5.1	5.0	0	5.1	2.6	0	0	2.8	2.6	2.0
MODE	21	22	23	24	25	26	27	28	29	30
EJECT	2.2	0	0	0	0	0	5.1	0	0	0
REC	2.1	0	0	0	0	0	5.1	0	0	0
MODE	31	32	33	34	35	36	37	38	39	40
EJECT	0	5.1	0	5.1	0	3.1	2.8	2.3	5.1	2.5
REC	0	5.1	0	5.1	0	3.0	2.8	2.3	5.1	2.4
MODE	41	42	43	44						
EJECT	0	0	5.1	5.1						
REC	0	0	5.1	5.1						

REF. NO. \ MODE	IC8302									
MODE	1	2	3	4	5	6	7	8	9	10
EJECT	1.7	1.9	2.3	2.6	0	0.9	1.5	0.9	5.0	3.5
REC	1.7	1.9	2.3	2.4	0	0.9	1.5	0.9	5.0	3.5
MODE	11	12	13	14	15	16	17	18	19	20
EJECT	2.2	0	5.1	5.1	3.6	3.5	4.3	0	0	0
REC	2.2	0	5.1	5.1	3.6	3.5	4.3	0	0	0
MODE	21	22	23	24	25	26	27	28	29	30
EJECT	0	0	2.3	5.1	5.0	1.5	5.2	1.5	5.1	1.5
REC	0	0	2.4	5.1	5.0	1.5	5.2	1.5	5.1	1.5
MODE	31	32	33	34	35	36	37	38	39	40
EJECT	0.2	5.1	0	5.1	0	5.1	0	2.2	2.0	2.6
REC	0.2	5.1	0	5.1	0	5.1	0	2.1	2.0	2.6
MODE	41	42	43	44	45	46	47	48		
EJECT	2.9	5.1	0	0	0.1	0	1.5	4.0		
REC	2.8	5.1	0	0	0.1	0	1.5	3.8		

REF. NO. \ MODE	IC8303									
MODE	1	2	3	4	5	6	7	8	9	10
EJECT	0.4	0.3	0	2.6	2.8	2.6	2.0	2.1	0	0
REC	0.4	0.3	0	2.6	2.9	2.6	1.9	2.1	0	0
MODE	11	12	13	14	15	16	17	18	19	20
EJECT	0	0	0	0	0	0	2.6	0	5.1	0
REC	0	0	0	0	0	0	2.6	0	5.1	0
MODE	21	22	23	24	25	26	27	28	29	30
EJECT	0	0	0	2.4	2.3	2.8	3.0	0	0	0
REC	0	0	0	2.4	2.2	2.8	3.1	0	0	0
MODE	31	32	33	34	35	36	37	38		
EJECT	0	2.2	2.0	2.6	2.8	1.5	0.3	0		
REC	0	2.1	1.9	2.6	2.9	1.5	0.3	0		

REF. NO. \ MODE	IC8306									
MODE	1	2	3	4	5	6	7	8	9	10
EJECT	1.5	0	2.6	2.4	2.5	1.9	0	2.4	2.6	5.1
REC	1.5	0	2.6	2.4	2.5	1.9	0	2.4	2.6	5.1
MODE	11	12	13	14						
EJECT	2.6	2.6	5.1	5.1						
REC	2.7	2.6	5.1	5.1						

REF. NO. \ MODE	IC8307									
MODE	1	2	3	4	5					
EJECT	2.6	0	0	2.1	5.1					
REC	2.6	0	0	2.1	5.1					

REF. NO. \ MODE	IC8308									
MODE	I	G	O							
EJECT	11.5	0	5.0							
REC	11.5	0	5.0							

REF. NO. \ MODE	IC8309									
MODE	1	2	3	4	5	6	7	8	9	10
EJECT	0.9	0.9	0	0	0	0	0	0	0	1.0
REC	0.9	0.9	0	0	0	0	0	0	0	1.1
MODE	11	12	13	14	15	16				
EJECT	1.1	0.9	0.9	0.9	0.9	5.0				
REC	1.1	0.9	0.9	0.9	0.9	5.0				

REF. NO. \ MODE	IC8312									
MODE	I	G	O							
EJECT	11.5	0	5.1							
REC	11.5	0	5.1							

IC8302
SC371026FU

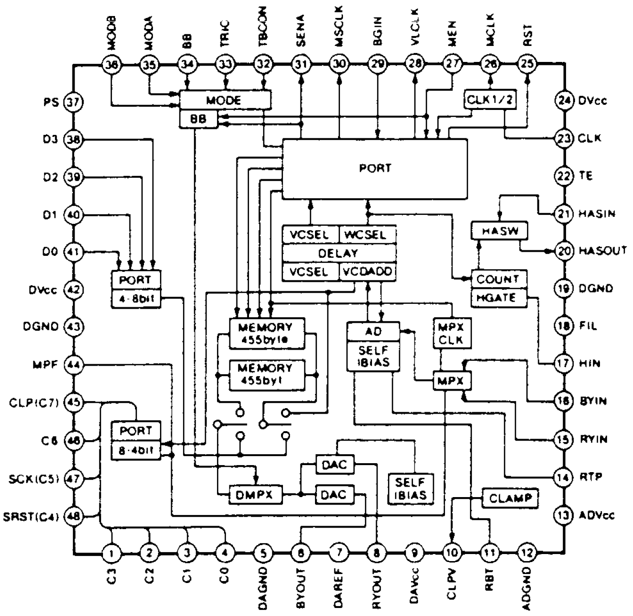

IC8309
MC74HC4053FR

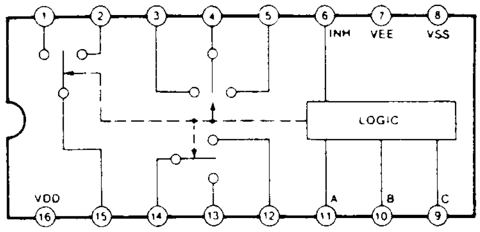

G.A. BLOCK SCHEMATIC DIAGRAM 6/9 (E11: Page CBA-9)

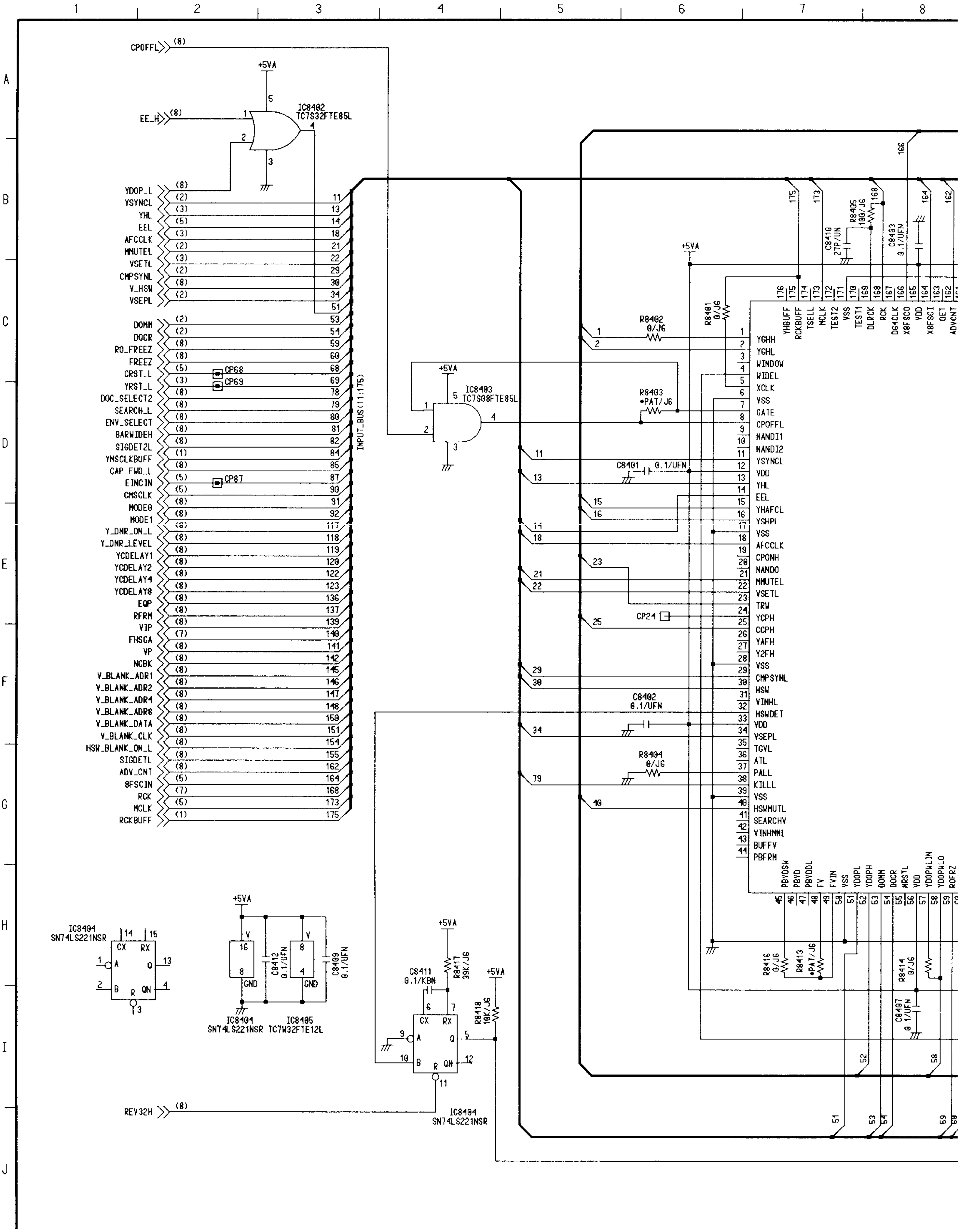

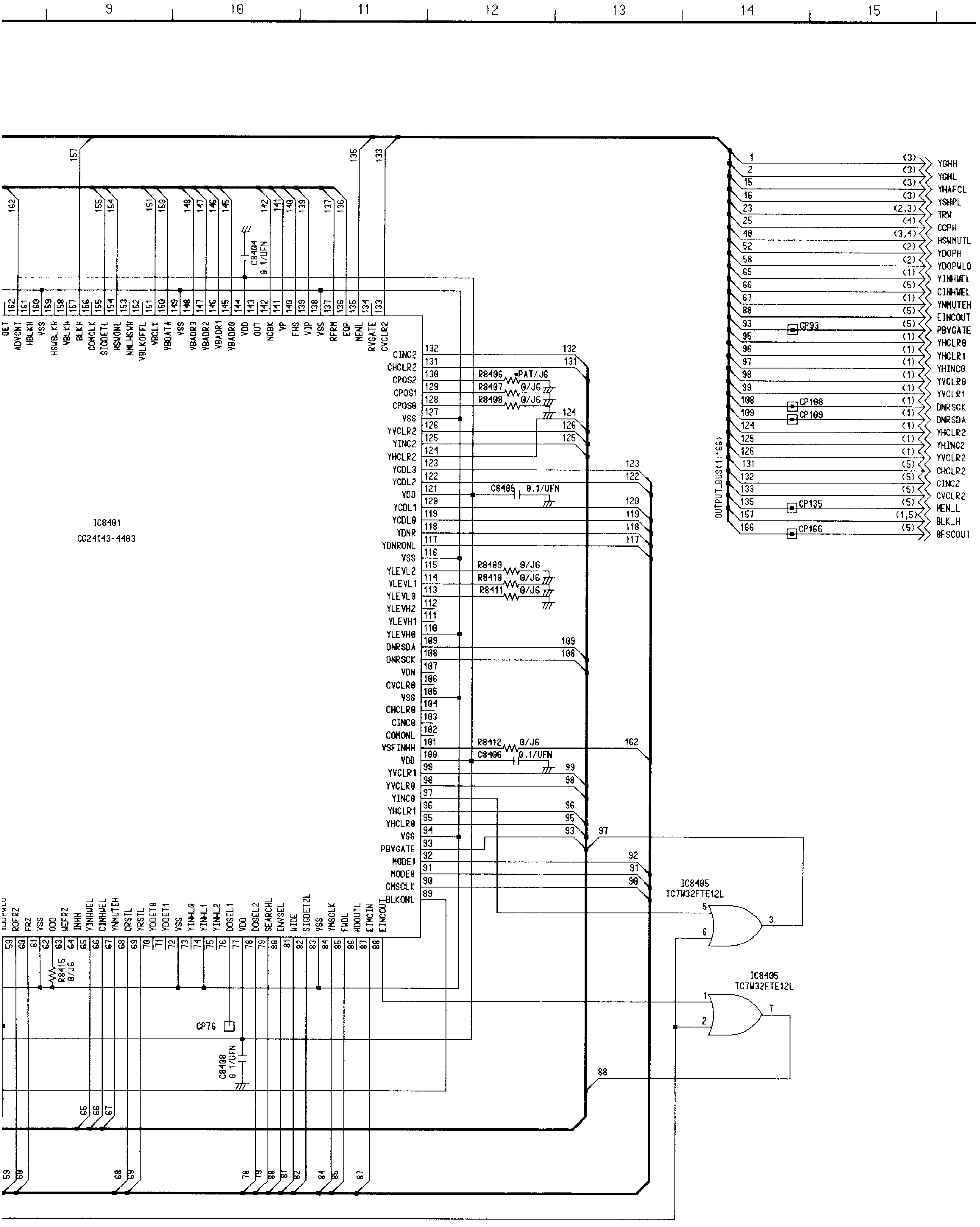

*=REFER TO THE COMPARISON CHART

Ref No.8400 Series.

G.A. BLOCK DC VOLTAGE CHART

REF. NO.	IC8401									
MODE	1	2	3	4	5	6	7	8	9	10
EJECT	0.3	4.9	0.1	5.2	2.7	0	5.1	5.1	5.2	5.2
REC	0.3	4.8	0.1	5.2	2.6	0	5.1	5.1	5.1	5.1

REF. NO.	IC8401									
MODE	11	12	13	14	15	16	17	18	19	20
EJECT	4.2	5.2	4.5	0	5.1	5.1	0	1.8	0	0
REC	4.3	5.2	4.5	0	5.1	5.1	0	1.7	0	0

REF. NO.	IC8401									
MODE	21	22	23	24	25	26	27	28	29	30
EJECT	5.1	0.2	2.6	0.1	0.1	0.4	2.6	0	4.7	4.7
REC	5.1	0.2	2.6	0.1	0.1	0.4	2.6	0	4.7	5.0

REF. NO.	IC8401									
MODE	31	32	33	34	35	36	37	38	39	40
EJECT	5.2	0	5.2	5.0	5.2	5.2	0	5.2	0	5.1
REC	5.1	0	5.2	5.0	5.1	5.1	0	5.2	0	4.9

REF. NO.	IC8401									
MODE	41	42	43	44	45	46	47	48	49	50
EJECT	0	5.1	0	5.1	0	0	0	0	0	0
REC	0	5.2	0	5.1	0	0	0	0	0	0

REF. NO.	IC8401									
MODE	51	52	53	54	55	56	57	58	59	60
EJECT	5.2	0	0.1	0	5.2	5.2	5.2	5.2	0	0
REC	5.2	0	0.1	0	5.1	5.2	5.2	5.2	0	0

REF. NO.	IC8401									
MODE	61	62	63	64	65	66	67	68	69	70
EJECT	0	0	0	0	0	0	0	5.0	3.7	0
REC	0	0	0	0	0	0	0	0	3.6	0

REF. NO.	IC8401									
MODE	71	72	73	74	75	76	77	78	79	80
EJECT	0	0	0	0	5.2	0	5.2	5.1	5.2	5.1
REC	0	0	5.1	0	0	0	5.2	5.1	5.2	0

REF. NO.	IC8401									
MODE	81	82	83	84	85	86	87	88	89	90
EJECT	5.2	0	0	2.4	5.2	5.2	0	0	5.2	2.5
REC	0	0	0	2.4	0	5.1	0	0	5.2	2.6

REF. NO.	IC8401									
MODE	91	92	93	94	95	96	97	98	99	100
EJECT	0	0	0	0	0	0	0	0	0	5.2
REC	0	0	0	0	0	0	0	0	0	5.2

REF. NO.	IC8401									
MODE	101	102	103	104	105	106	107	108	109	110
EJECT	0	5.2	0	0	0	0	5.2	0	0	0
REC	0	5.2	0	0	0	0	5.2	0	0	0

REF. NO.	IC8401									
MODE	111	112	113	114	115	116	117	118	119	120
EJECT	5.2	5.2	0	0	0	0	5.2	5.2	0.1	0.1
REC	0	5.2	5.2	0.1	0.1	5.2	0.1	5.2	0	0

REF. NO.	IC8401									
MODE	121	122	123	124	125	126	127	128	129	130
EJECT	5.2	0.1	5.2	0	0	0	0	0	0	5.2
REC	0	0.1	5.2	0	0	0	0	0	0	5.2

REF. NO.	IC8401									
MODE	131	132	133	134	135	136	137	138	139	140
EJECT	0	0	0	0	5.2	0.4	5.1	0	0	0.4
REC	0	0	0	0	5.1	0.4	5.1	0	0	0.4

REF. NO.	IC8401									
MODE	141	142	143	144	145	146	147	148	149	150
EJECT	0	1.1	0	5.2	5.1	5.1	5.1	5.1	0	0
REC	0	1.1	0	5.2	5.1	5.1	5.1	5.1	0	0

REF. NO.	IC8401									
MODE	151	152	153	154	155	156	157	158	159	160
EJECT	0	5.2	5.2	0.1	0	0	1.1	0	0	0
REC	0	5.1	5.1	0.1	0	0	1.1	0	0	0

REF. NO.	IC8401									
MODE	161	162	163	164	165	166	167	168	169	170
EJECT	1.1	0	5.2	2.2	5.2	2.3	2.6	1.5	1.5	5.2
REC	1.1	0	5.2	2.1	5.2	2.2	2.6	1.5	1.5	5.1

REF. NO.	IC8401									
MODE	171	172	173	174	175	176				
EJECT	0	5.2	1.5	5.2	2.6	0.3				
REC	0	5.1	1.5	5.1	2.6	0.3				

REF. NO.	IC8402									
MODE	1	2	3	4	5					
EJECT	4.9	0	0	5.2	5.2					
REC	4.9	0	0	5.2	5.2					

REF. NO.	IC8403									
MODE	1	2	3	4	5					
EJECT	5.1	5.2	0	5.0	5.2					
REC	5.1	5.2	0	5.0	5.2					

REF. NO.	IC8404									
MODE	1	2	3	4	5	6	7	8	9	10
EJECT	1.2	0.7	0.7	4.5	0.1	5.2	0.6	0	0	0
REC	1.2	0.8	0.8	4.5	0.1	5.2	0.6	0	0	0

REF. NO.	IC8404									
MODE	11	12	13	14	15	16				
EJECT	0	4.4	0.1	5.2	0.3	5.2				
REC	0	4.4	0.1	5.2	0.3	5.2				

REF. NO.	IC8405									
MODE	1	2	3	4	5	6	7	8		
EJECT	0	0.1	0	0	0	0.1	0	5.2		
REC	0	0.1	0	0	0	0.1	0	5.2		

READ CLK GEN SCHEMATIC DIAGRAM 7/9 (E11: Page CBA-9)

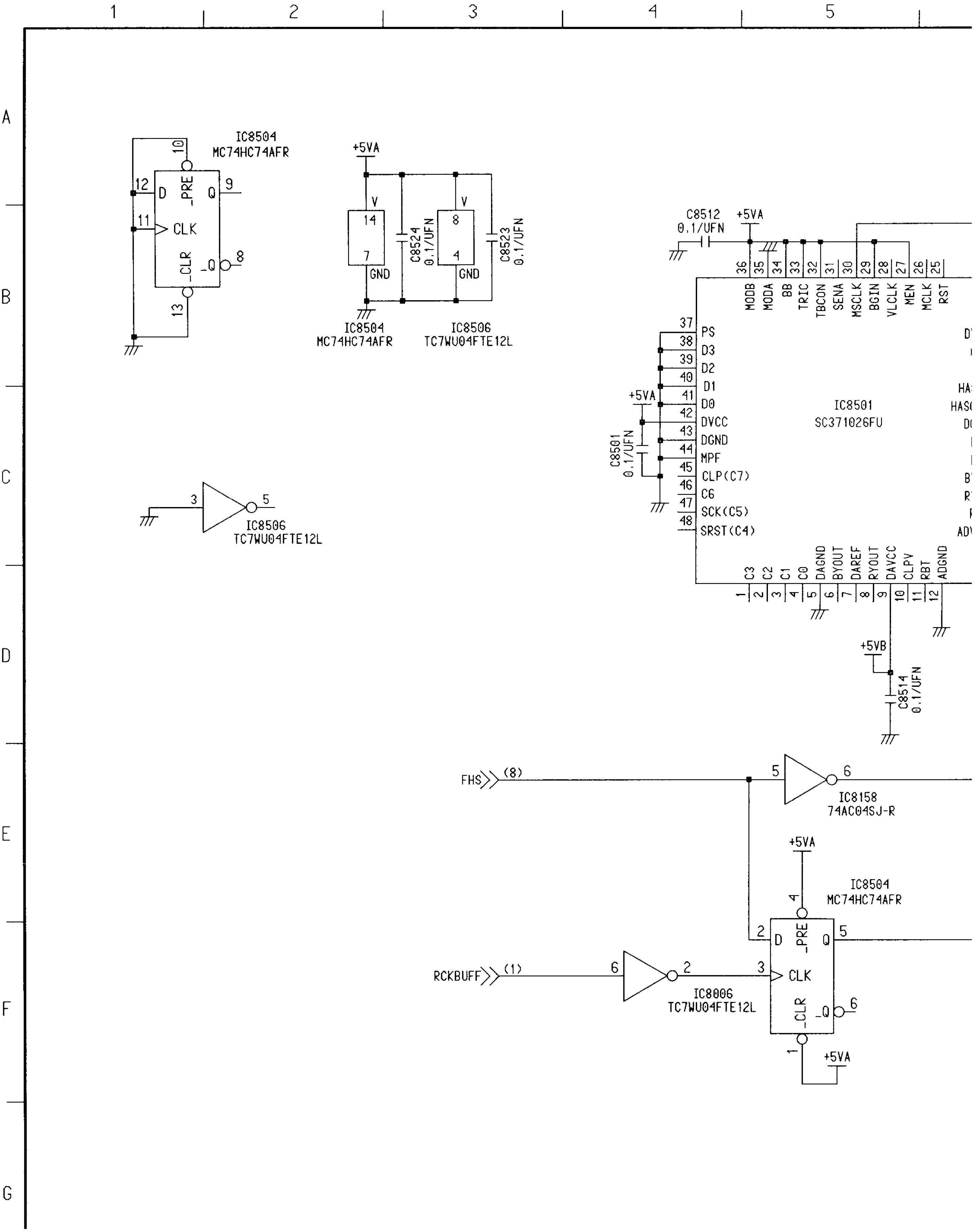

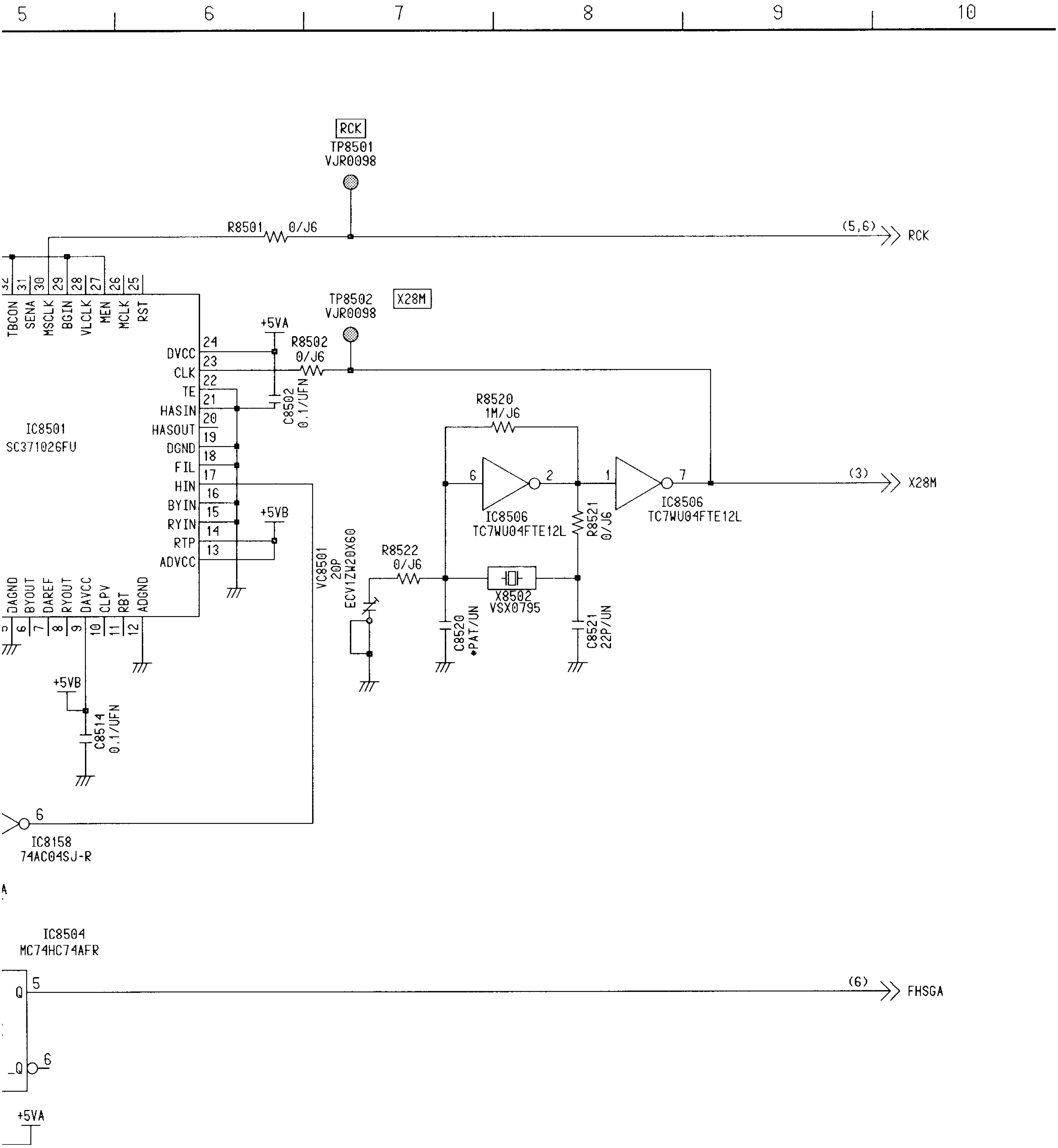

*=REFER TO THE CO

Ref No.8500

READ CLK GEN DC VOLTAGE CHART

REF. NO.	IC8006									
MODE	1	2	3	4	5	6	7	8		
EJECT	0.2	2.5	0	0	5.2	2.6	5.2	5.2		
REC	0.2	2.5	0	0	5.2	2.7	5.2	5.2		
REF. NO.	IC8158									
MODE	1	2	3	4	5	6	7	8	9	10
EJECT	4.9	0	2.5	2.5	0.4	4.7	0	0.4	4.9	2.8
REC	4.9	0	2.5	2.5	0.4	4.7	0	0.4	4.9	2.7
REF. NO.	IC8158									
MODE	11	12	13	14						
EJECT	2.5	2.9	2.8	5.1						
REC	2.5	2.8	2.7	5.1						
REF. NO.	IC8501									
MODE	1	2	3	4	5	6	7	8	9	10
EJECT	0	0	0	0	0	0.4	1.6	0.4	5.1	3.5
REC	0	0	0	0	0	0.4	1.6	0.4	5.1	3.5
REF. NO.	IC8501									
MODE	11	12	13	14	15	16	17	18	19	20
EJECT	2.1	0	5.1	5.1	0	0	4.7	0	0	0
REC	2.1	0	5.1	5.1	0	0	4.7	0	0	0
REF. NO.	IC8501									
MODE	21	22	23	24	25	26	27	28	29	30
EJECT	0	0	2.8	5.2	3.9	1.6	5.2	1.5	5.2	1.5
REC	0	0	2.8	5.2	3.8	1.6	5.2	1.6	5.2	1.5
REF. NO.	IC8501									
MODE	31	32	33	34	35	36	37	38	39	40
EJECT	0.2	5.2	5.2	5.2	0	5.2	0	0	0	0
REC	0.2	5.2	5.2	5.2	0	5.2	0	0	0	0
REF. NO.	IC8501									
MODE	41	42	43	44	45	46	47	48		
EJECT	0	5.2	0	0	0.1	0	1.5	4.0		
REC	0	5.2	0	0	0.1	0	1.5	3.9		
REF. NO.	IC8504									
MODE	1	2	3	4	5	6	7	8	9	10
EJECT	5.2	0.4	2.5	5.2	0.4	4.8	0	5.2	5.2	0
REC	5.2	0.4	2.5	5.2	0.4	4.8	0	5.2	5.2	0
REF. NO.	IC8504									
MODE	11	12	13	14						
EJECT	0	0	0	5.2						
REC	0	0	0	5.2						
REF. NO.	IC8506									
MODE	1	2	3	4	5	6	7	8		
EJECT	2.7	2.7	0	0	5.2	2.5	2.8	5.2		
REC	2.7	2.7	0	0	5.2	2.5	2.8	5.2		

IC8501
SC371026FU

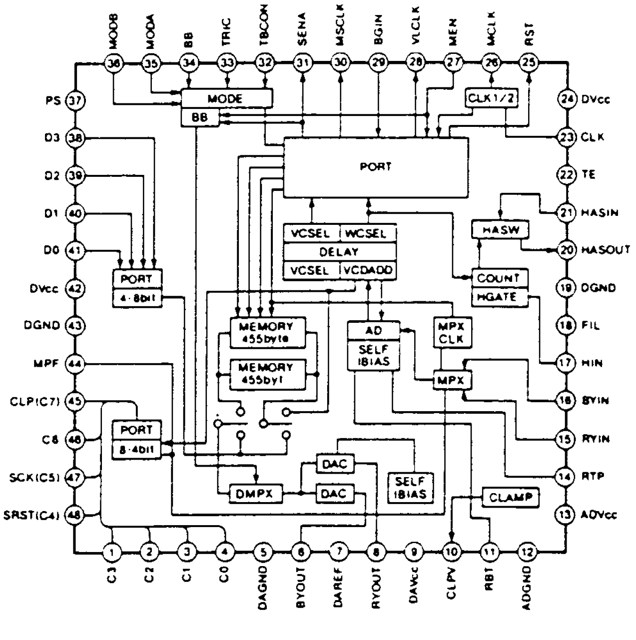

: TO THE COMPARISON CHART

.8500~8549 Series.

TBC (1) CONNECTION SCHEMATIC DIAGRAM 8/9 (E11: Page CBA-9)

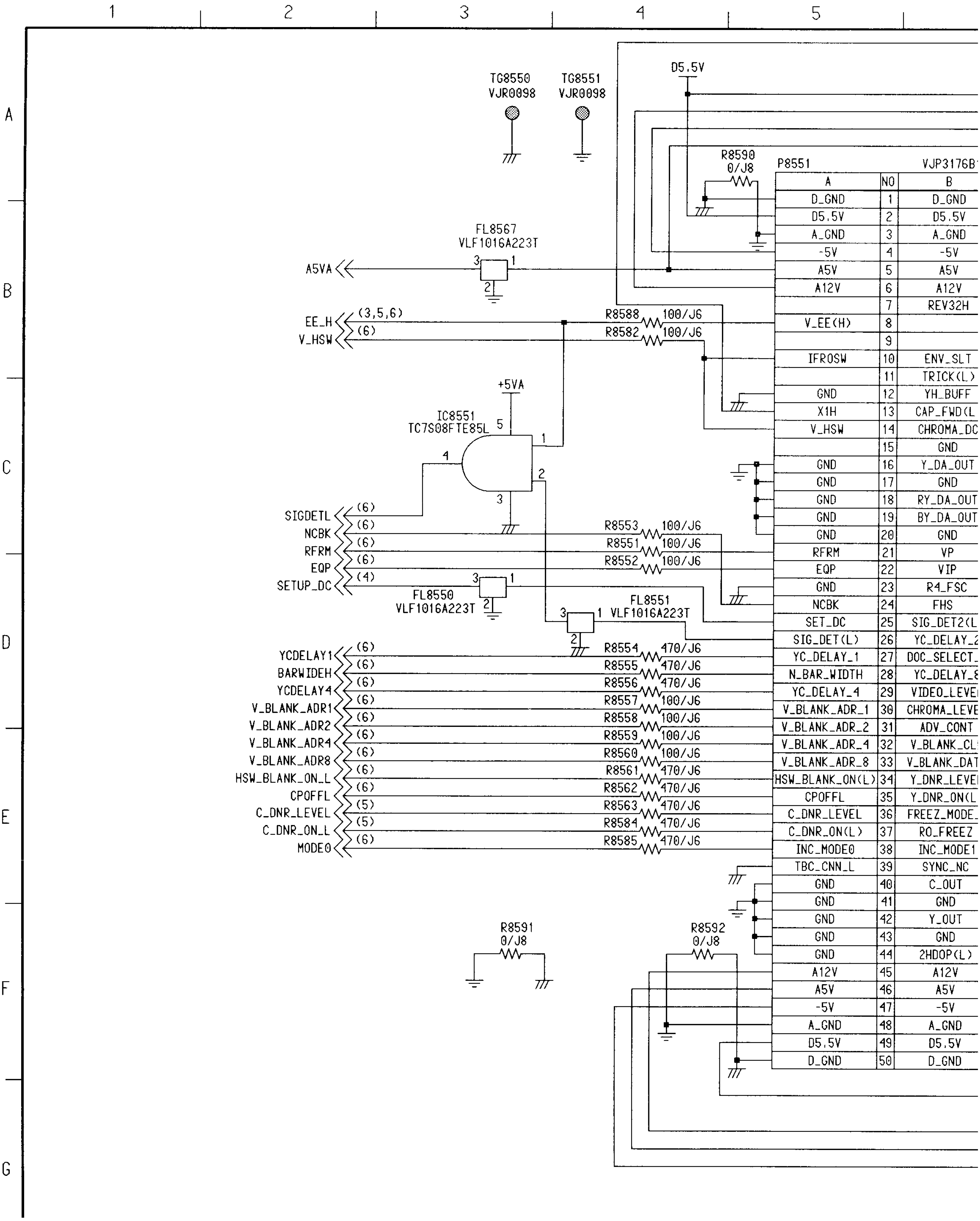

A	NO	B
D_GND	1	D_GND
D5.5V	2	D5.5V
A_GND	3	A_GND
-5V	4	-5V
A5V	5	A5V
A12V	6	A12V
	7	REV32H
V_EE(H)	8	
	9	
IFROSW	10	ENV_SLT
	11	TRICK(L)
GND	12	YH_BUFF
X1H	13	CAP_FWD(L
V_HSW	14	CHROMA_DC
	15	GND
GND	16	Y_DA_OUT
GND	17	GND
GND	18	RY_DA_OUT
GND	19	BY_DA_OUT
GND	20	GND
RFRM	21	VP
EQP	22	VIP
GND	23	R4_FSC
NCBK	24	FHS
SET_DC	25	SIG_DET2(L
SIG_DET(L)	26	YC_DELAY_2
YC_DELAY_1	27	DOC_SELECT_
N_BAR_WIDTH	28	YC_DELAY_8
YC_DELAY_4	29	VIDEO_LEVE
V_BLANK_ADR_1	30	CHROMA_LEVE
V_BLANK_ADR_2	31	ADV_CONT
V_BLANK_ADR_4	32	V_BLANK_CL
V_BLANK_ADR_8	33	V_BLANK_DAT
HSW_BLANK_ON(L)	34	Y_DNR_LEVE
CPOFFL	35	Y_DNR_ON(L
C_DNR_LEVEL	36	FREEZ_MODE_
C_DNR_ON(L)	37	RO_FREEZ
INC_MODE0	38	INC_MODE1
TBC_CNN_L	39	SYNC_NC
GND	40	C_OUT
GND	41	GND
GND	42	Y_OUT
GND	43	GND
GND	44	2HDOP(L)
A12V	45	A12V
A5V	46	A5V
-5V	47	-5V
A_GND	48	A_GND
D5.5V	49	D5.5V
D_GND	50	D_GND

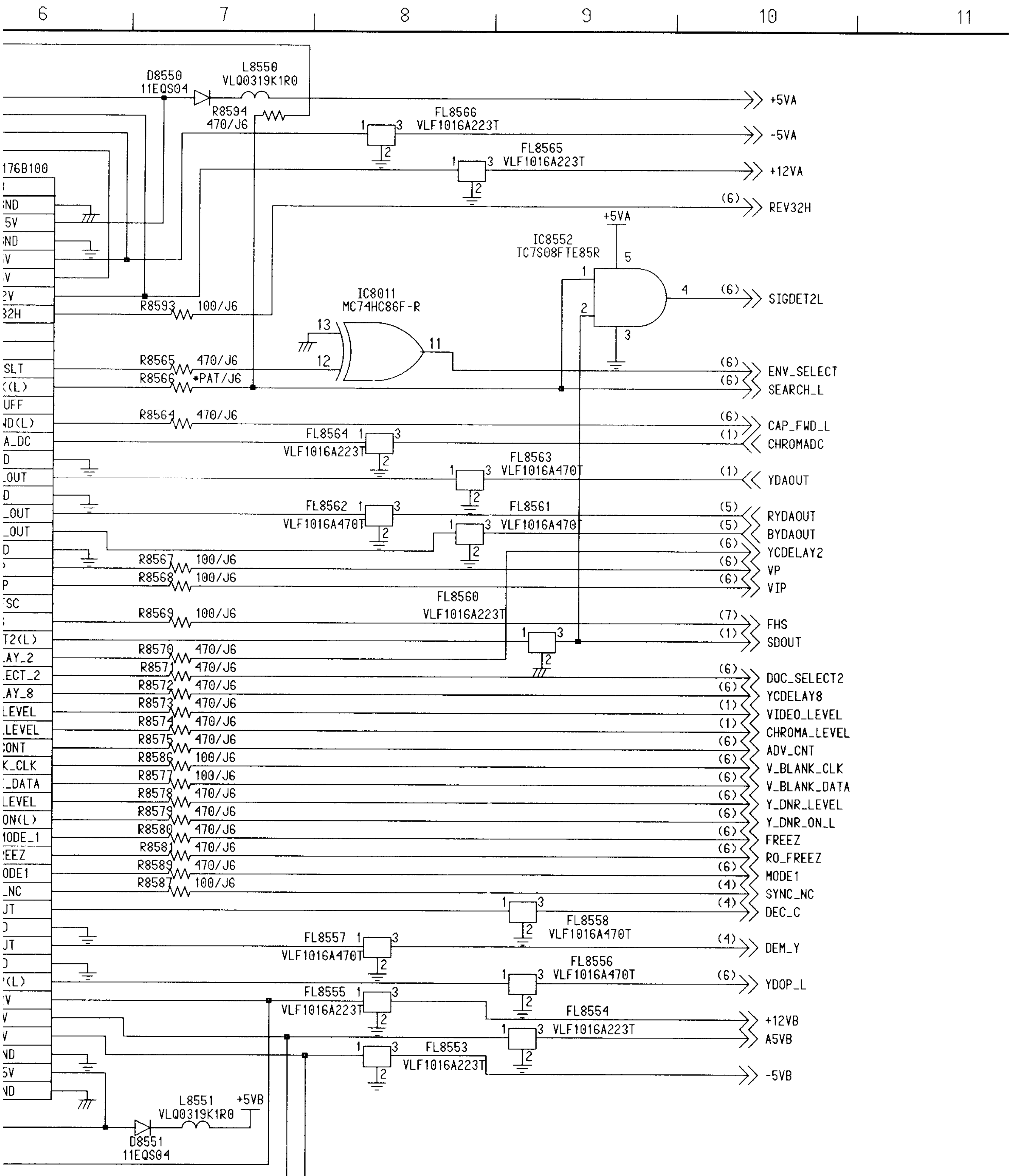

*=REFER TO THE COMPARISON CHART

Ref No.8550 Series.

TBC (1) CONNECTION DC VOLTAGE CHART

REF. NO. / MODE	IC8011									
	1	2	3	4	5	6	7	8	9	10
EJECT	1.5	0	2.6	0	1.5	2.4	0	5.1	0	0
REC	1.5	0	2.6	0	1.5	2.4	0	5.1	0	5.2
REF. NO. / MODE	IC8011									
	11	12	13	14						
EJECT	5.1	4.6	0	5.1						
REC	0	0.1	0	5.1						
REF. NO. / MODE	IC8551									
	1	2	3	4	5					
EJECT	4.9	0	0	0	5.2					
REC	4.9	0	0	0	5.2					
REF. NO. / MODE	IC8552									
	1	2	3	4	5					
EJECT	5.2	0.2	0	0	5.2					
REC	5.2	0.2	0	0	5.2					

TBC (1) COMPARISON CHART 9/9 (E11: Page CBA-9)

REF	AG-8700 AG-8600
C8080	*PAT/UN
C8215	*PAT/UN
C8216	*PAT/UN
C8520	*PAT/UN
D8003	*PAT
D8004	*PAT
D8005	*PAT
D8152	*PAT
IC8162	*PAT
QR8001	*PAT
R8098	*PAT/J6
R8258	*PAT/J6
R8315	*PAT/J6
R8318	*PAT/J6
R8322	*PAT/J6
R8403	*PAT/J6
R8406	*PAT/J6
R8413	*PAT/J6
R8566	*PAT/J6
VR3801	*PAT

SYNC GEN-1 SCHEMATIC DIAGRAM 1/6 (E12: Page CBA-10)

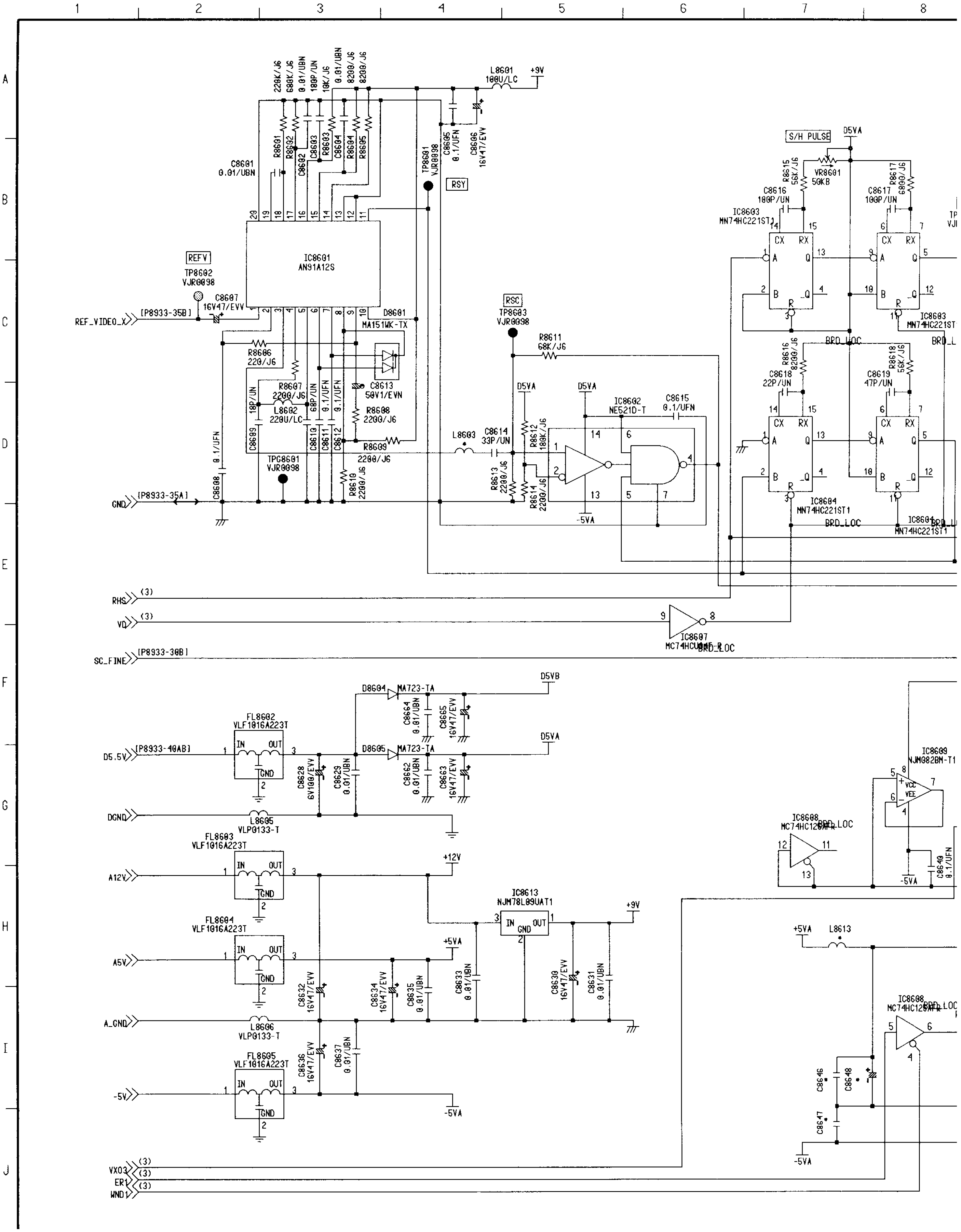

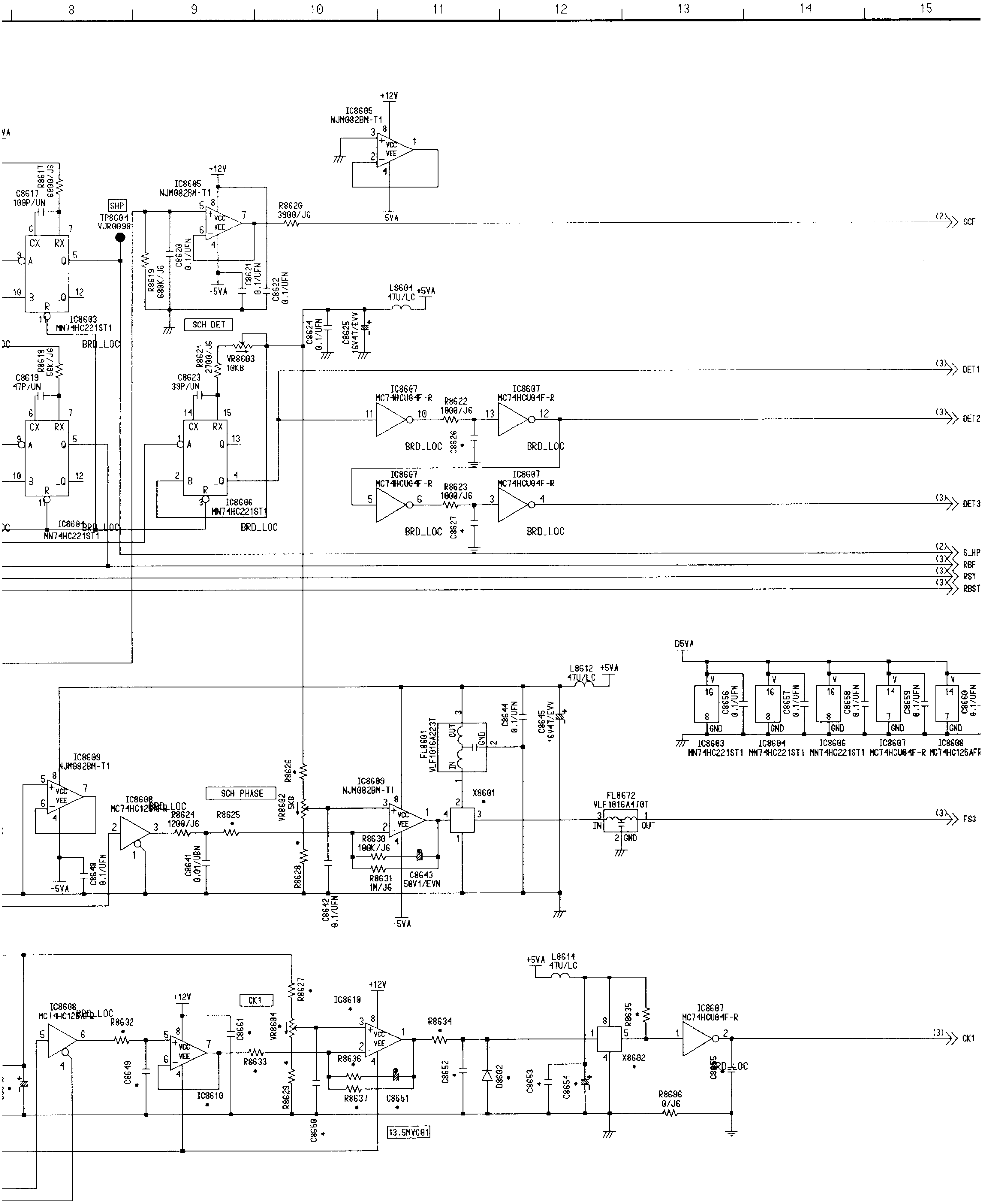

•=REFER TO THE COMPARISON CHART

Ref No.8600 Series

5

(2) SCF

(3) DET1

(3) DET2

(3) DET3

(2) S_HP
(3) RBF
(3) RSY
(3) RBST

IC8608
MC74HC125AFR

(3) FS3

(3) CK1

SYNC GEN-1 DC VOLTAGE CHART

REF. NO.	IC8601									
MODE	1	2	3	4	5	6	7	8	9	10
EJECT	3.8	4.3	4.5	5.3	5.3	4.5	4.5	4.5	4.3	8.9
REC	3.8	4.3	4.6	5.3	5.3	4.6	4.6	4.6	4.3	8.0
REF. NO.	IC8601									
MODE	11	12	13	14	15	16	17	18	19	20
EJECT	5.2	0	0	8.6	8.9	0.3	5.3	2.4	5.2	0
REC	5.2	0	0	8.6	8.9	0.4	5.3	2.4	5.3	0
REF. NO.	IC8602									
MODE	1	2	3	4	5	6	7	8	9	10
EJECT	0.1	0.1	0	4.2	0.1	5.2	0	0.1	5.2	0
REC	0.1	0.1	0	0	0.1	5.2	0	0	5.2	0
REF. NO.	IC8602									
MODE	11	12	13	14						
EJECT	−0.5	0	−5.0	5.2						
REC	−0.5	0	−5.0	5.2						
REF. NO.	IC8603									
MODE	1	2	3	4	5	6	7	8	9	10
EJECT	5.2	5.2	5.2	5.2	0	0	5.2	0	0	5.2
REC	5.2	5.2	5.2	5.2	0	0	5.2	0	0	5.2
REF. NO.	IC8603									
MODE	11	12	13	14	15	16				
EJECT	5.0	5.2	0	0	5.1	5.2				
REC	5.0	5.2	0	0	5.1	5.2				
REF. NO.	IC8604									
MODE	1	2	3	4	5	6	7	8	9	10
EJECT	0	5.2	5.0	5.2	0.1	0	5.1	0	0	5.2
REC	0	5.2	5.0	5.2	0.1	0	5.1	0	0	5.2
REF. NO.	IC8604									
MODE	11	12	13	14	15	16				
EJECT	5.0	5.2	0	0	5.2	5.2				
REC	5.0	5.2	0	0	5.2	5.2				
REF. NO.	IC8605									
MODE	1	2	3	4	5	6	7	8		
EJECT	0	0	0	−5.0	0	0	0	11.6		
REC	0	0	0	−5.0	0	0	0	11.6		
REF. NO.	IC8606									
MODE	1	2	3	4	5	6	7	8	9	10
EJECT	5.2	4.9	5.0	5.2	2.2	0	2.6	0	0	1.2
REC	5.2	5.0	5.0	5.2	2.3	0	2.3	0	0	1.2
REF. NO.	IC8606									
MODE	11	12	13	14	15	16				
EJECT	4.9	2.5	0	0	4.9	5.2				
REC	4.9	2.5	0	0	5.0	5.2				
REF. NO.	IC8607									
MODE	1	2	3	4	5	6	7	8	9	10
EJECT	2.3	2.6	0	5.2	5.2	0	0	5.0	0.1	0
REC	2.3	0	0	5.2	5.2	0	0	5.0	0.2	0
REF. NO.	IC8607									
MODE	11	12	13	14						
EJECT	5.2	5.2	0	5.2						
REC	5.2	5.2	0	5.2						
REF. NO.	IC8608									
MODE	1	2	3	4	5	6	7	8	9	10
EJECT	0	2.6	2.6	5.1	2.5	2.4	0	0.5	0	3.9
REC	0	2.6	2.6	5.1	2.6	2.4	0	0.6	0	3.9
REF. NO.	IC8608									
MODE	11	12	13	14						
EJECT	0	0	0	5.2						
REC	0	0	0	5.2						
REF. NO.	IC8609									
MODE	1	2	3	4	5	6	7	8		
EJECT	2.5	2.6	2.6	−5.0	0	0	0	4.9		
REC	2.6	2.6	2.6	−5.0	0	0	0	4.9		
REF. NO.	IC8610									
MODE	1	2	3	4	5	6	7	8		
EJECT	2.4	2.4	2.4	−5.0	2.4	2.4	2.4	11.6		
REC	2.4	2.4	2.4	−5.0	2.4	2.4	2.4	11.6		
REF. NO.	IC8613									
MODE	1	2	3							
EJECT	9.1	0	11.6							
REC	9.1	0	11.6							

IC8601
AN91A12S

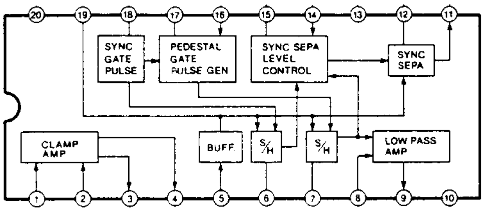

RISON CHART
) Series.

SYNC GEN-2 SCHEMATIC DIAGRAM 2/6 (E12: Page CBA-10)

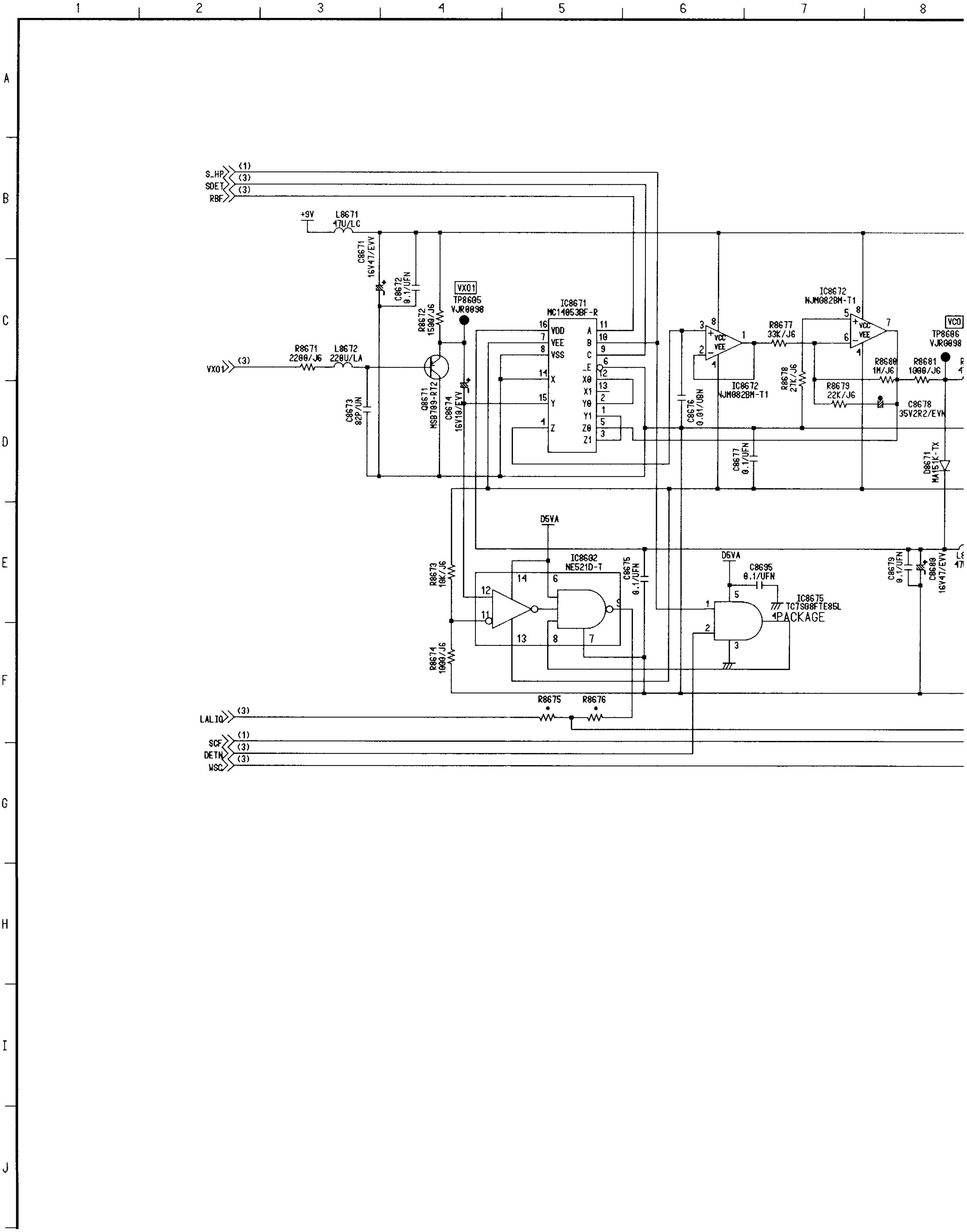

8 9 10 11 12 13 14 15

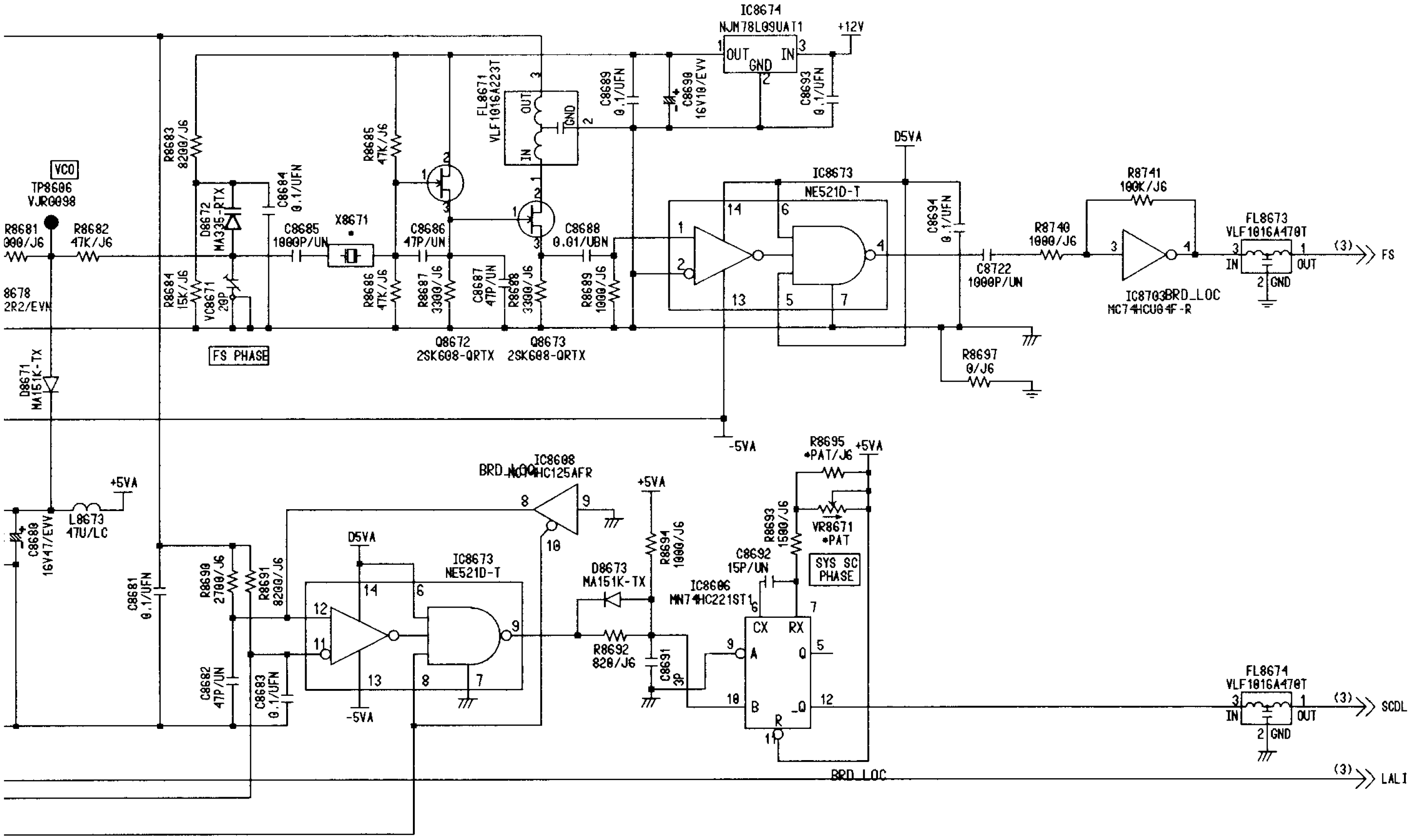

IC8671
MC14053BF-R

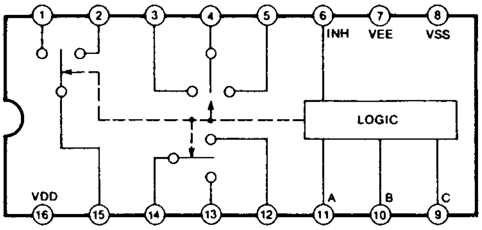

*PAT=PATTERN ONLY
*=REFER TO THE COMPARISON CHART
Ref No.8671~ Series.

SYNC GEN-2 DC VOLTAGE CHART

REF. NO.	IC8602									
MODE	1	2	3	4	5	6	7	8	9	10
EJECT	0.1	0.1	0	4.2	0.1	5.2	0	0.1	5.2	0
REC	0.1	0.1	0	0	0.1	5.2	0	0	5.2	0
REF. NO.	IC8602									
MODE	11	12	13	14						
EJECT	−0.5	0	−5.0	5.2						
REC	−0.5	0	−5.0	5.2						
REF. NO.	IC8606									
MODE	1	2	3	4	5	6	7	8	9	10
EJECT	5.2	4.9	5.0	5.2	2.2	0	2.6	0	0	1.2
REC	5.2	5.0	5.0	5.2	2.3	0	2.3	0	0	1.2
REF. NO.	IC8606									
MODE	11	12	13	14	15	16				
EJECT	4.9	2.5	0	0	4.9	5.2				
REC	4.9	2.5	0	0	5.0	5.2				
REF. NO.	IC8608									
MODE	1	2	3	4	5	6	7	8	9	10
EJECT	0	2.6	2.6	5.1	2.5	2.4	0	0.5	0	3.9
REC	0	2.6	2.6	5.1	2.6	2.4	0	0.6	0	3.9
REF. NO.	IC8608									
MODE	11	12	13	14						
EJECT	0	0	0	5.2						
REC	0	0	0	5.2						
REF. NO.	IC8671									
MODE	1	2	3	4	5	6	7	8	9	10
EJECT	0	0	0	0	0	0	−5.0	0	0	0
REC	0	0	0	−0.1	−0.2	0	−5.0	0	0	0
REF. NO.	IC8671									
MODE	11	12	13	14	15	16				
EJECT	0.1	0	0	0	0	4.9				
REC	0.1	0	0	0	0	4.9				
REF. NO.	IC8672									
MODE	1	2	3	4	5	6	7	8		
EJECT	0	0	0	−5.0	0	0.3	−0.2	9.0		
REC	0	0	0	−5.0	0	0.3	−0.2	9.0		
REF. NO.	IC8673									
MODE	1	2	3	4	5	6	7	8	9	10
EJECT	0	0	0	1.5	5.2	5.2	0	3.9	1.2	0
REC	0	0	0	1.6	5.2	5.2	0	3.9	1.2	0
REF. NO.	IC8673									
MODE	11	12	13	14						
EJECT	2.9	0.5	−5.0	5.2						
REC	3.0	0.6	−5.0	5.2						
REF. NO.	IC8674									
MODE	1	2	3							
EJECT	9.1	0	11.6							
REC	9.1	0	11.6							
REF. NO.	IC8675									
MODE	1	2	3	4	5					
EJECT	0	0	0	0.1	5.2					
REC	0	0	0	0.1	5.2					
REF. NO.	IC8703									
MODE	1	2	3	4	5	6	7	8	9	10
EJECT	1.1	4.1	2.5	2.5	2.6	2.6	0	5.2	5.2	2.4
REC	1.1	4.1	2.5	2.5	2.6	2.6	0	5.2	5.2	2.3
REF. NO.	IC8703									
MODE	11	12	13	14						
EJECT	2.6	2.5	2.6	5.2						
REC	2.6	2.5	2.6	5.2						
REF. NO.	Q8671			Q8672			Q8673			
MODE	E	C	B	G	S	D	G	S	D	
EJECT	3.3	0	2.6	4.5	4.9	9.1	4.9	8.2	9.0	
REC	3.3	0	2.6	4.5	4.9	9.1	4.9	8.2	9.0	

SYNC GEN-3 SCHEMATIC DIAGRAM 3/6 (E12: Page CBA-10)

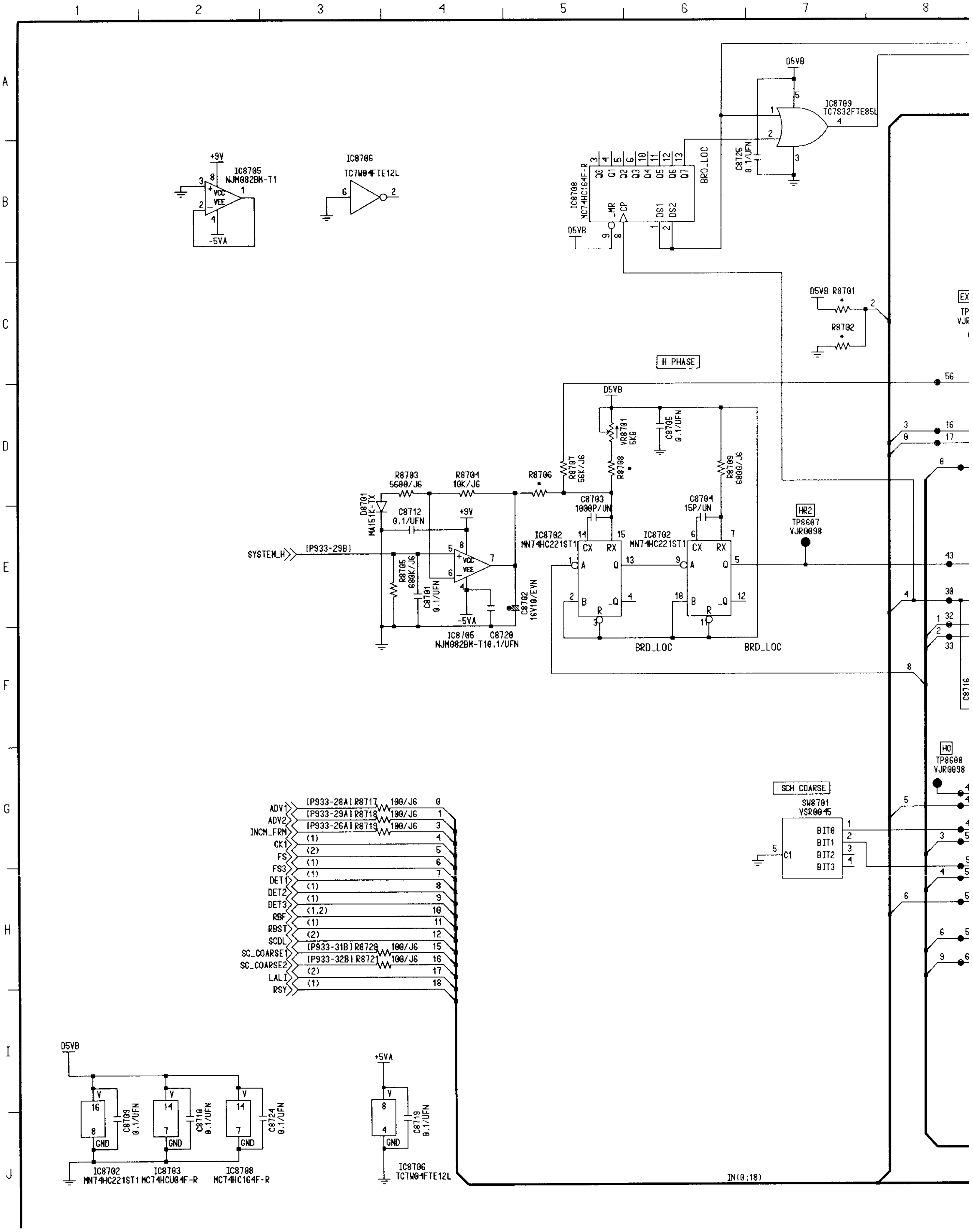

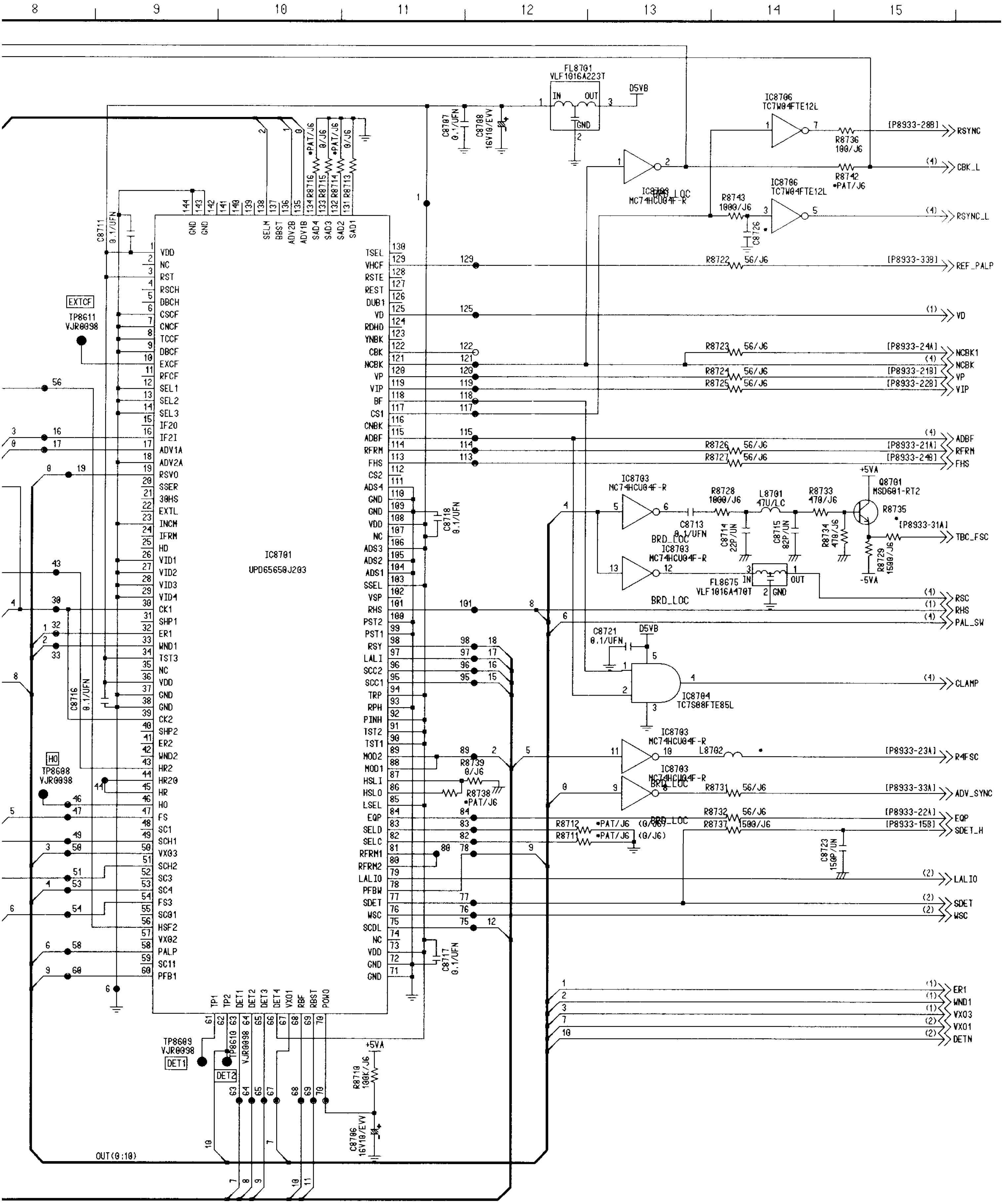

*=REFER TO THE COMPARISON CHART

Ref No.8701 Series.

SYNC GENE-3 DC VOLTAGE CHART

REF. NO.	IC8701									
MODE	1	2	3	4	5	6	7	8	9	10
EJECT	5.2	0	5.2	0	0	0	0	0	0	5.2
REC	5.2	0	5.2	0	0	0	0	0	0	5.2
REF. NO.	**IC8701**									
MODE	11	12	13	14	15	16	17	18	19	20
EJECT	5.2	0	0	0	0	5.2	5.2	0	5.2	5.2
REC	5.2	0	0	0	5.2	5.2	5.2	0.1	5.2	5.2
REF. NO.	**IC8701**									
MODE	21	22	23	24	25	26	27	28	29	30
EJECT	5.2	5.2	0	5.2	0.5	0	0	0	0	2.6
REC	5.2	5.2	0	5.2	0.5	0	0	0	0	2.7
REF. NO.	**IC8701**									
MODE	31	32	33	34	35	36	37	38	39	40
EJECT	5.1	2.5	5.1	5.2	0	5.2	0	0	2.6	5.1
REC	5.1	2.6	5.1	5.2	0	5.2	0	0	2.7	5.1
REF. NO.	**IC8701**									
MODE	41	42	43	44	45	46	47	48	49	50
EJECT	2.6	5.1	0	0	0	2.6	2.6	2.6	5.2	2.6
REC	2.6	5.1	0	0	0	2.7	2.6	2.6	5.2	2.6
REF. NO.	**IC8701**									
MODE	51	52	53	54	55	56	57	58	59	60
EJECT	5.2	2.6	2.6	2.3	2.6	5.2	2.6	2.6	5.2	0
REC	5.2	2.6	2.6	2.3	2.6	5.2	2.6	2.6	5.2	0
REF. NO.	**IC8701**									
MODE	61	62	63	64	65	66	67	68	69	70
EJECT	5.2	0	5.2	5.2	5.2	5.2	2.6	0.1	4.2	5.1
REC	2.6	0	5.2	5.2	5.2	5.2	2.6	0.1	4.2	5.2
REF. NO.	**IC8701**									
MODE	71	72	73	74	75	76	77	78	79	80
EJECT	0	0	5.2	0	2.4	3.8	0	0	5.2	0
REC	0	0	5.2	0	2.5	3.9	0	0	5.2	5.2
REF. NO.	**IC8701**									
MODE	81	82	83	84	85	86	87	88	89	90
EJECT	0	5.2	5.2	0.4	5.2	0	0	5.2	5.2	5.2
REC	5.2	5.2	5.2	0.4	5.2	0	0	5.2	5.2	5.2
REF. NO.	**IC8701**									
MODE	91	92	93	94	95	96	97	98	99	100
EJECT	5.2	5.2	0	5.2	0	0	5.2	5.2	0	0
REC	5.2	5.2	0	5.2	0.1	0.1	5.2	5.2	0	0
REF. NO.	**IC8701**									
MODE	101	102	103	104	105	106	107	108	109	110
EJECT	5.2	0.8	5.2	0	0	5.2	0	5.2	0	0
REC	5.2	0.8	5.2	0	0	5.2	0	5.2	0	0
REF. NO.	**IC8701**									
MODE	111	112	113	114	115	116	117	118	119	120
EJECT	0	0.5	0.4	5.2	0.2	1.3	0.4	0.2	0	0
REC	0	0.5	0	5.2	0.2	1.9	0.4	0.2	0	0.1
REF. NO.	**IC8701**									
MODE	121	122	123	124	125	126	127	128	129	130
EJECT	1.1	1.5	1.0	1.0	0.2	5.2	5.2	5.2	5.2	5.2
REC	1.1	1.4	1.7	0.3	0.2	0	0	5.2	5.2	0
REF. NO.	**IC8701**									
MODE	131	132	133	134	135	136	137	138	139	140
EJECT	0	5.2	0	5.2	5.2	5.2	5.2	5.2	5.2	5.2
REC	0	5.2	0	5.2	5.2	5.2	5.2	5.2	5.2	5.2
REF. NO.	**IC8701**									
MODE	141	142	143	144						
EJECT	5.2	5.2	0	0						
REC	5.2	5.2	0	0						
REF. NO.	**IC8702**									
MODE	1	2	3	4	5	6	7	8	9	10
EJECT	5.2	5.2	5.2	5.2	0	0	5.2	0	0	5.2
REC	5.2	5.2	5.2	5.2	0	0	5.2	0	0	5.2
REF. NO.	**IC8702**									
MODE	11	12	13	14	15	16				
EJECT	5.2	5.2	0	0	4.0	5.2				
REC	5.2	5.2	0	0	4.0	5.2				
REF. NO.	**IC8703**									
MODE	1	2	3	4	5	6	7	8	9	10
EJECT	1.1	4.1	2.5	2.5	2.6	2.6	0	5.2	5.2	2.4
REC	1.1	4.1	2.5	2.5	2.6	2.6	0	5.2	5.2	2.3
REF. NO.	**IC8703**									
MODE	11	12	13	14						
EJECT	2.6	2.5	2.6	5.2						
REC	2.6	2.5	2.6	5.2						

REF. NO.	IC8704									
MODE	1	2	3	4	5					
EJECT	0.2	0.2	0	0.1	5.2					
REC	0.2	0.2	0	0.1	5.2					
REF. NO.	**IC8705**									
MODE	1	2	3	4	5	6	7	8		
EJECT	0	0	0	−5.0	0	0	0	9.1		
REC	0	0	0	−5.0	0	0	0	9.1		
REF. NO.	**IC8706**									
MODE	1	2	3	4	5	6	7	8		
EJECT	0.4	4.9	0.4	0	4.5	0	4.5	4.9		
REC	0.4	4.9	0.4	0	4.5	0	4.6	4.9		
REF. NO.	**IC8708**									
MODE	1	2	3	4	5	6	7	8	9	10
EJECT	4.1	4.1	4.1	4.1	4.1	4.1	0	2.6	5.2	4.1
REC	4.1	4.1	4.1	4.1	4.1	4.1	0	2.7	5.2	4.1
REF. NO.	**IC8708**									
MODE	11	12	13	14						
EJECT	4.1	4.1	4.1	5.2						
REC	4.1	4.1	4.1	5.2						
REF. NO.	**IC8709**									
MODE	1	2	3	4	5					
EJECT	4.1	4.1	0	4.1	5.2					
REC	4.1	4.1	0	4.2	5.2					
REF. NO.		**Q8701**								
MODE	E	C	B							
EJECT	−0.7	4.9	0							
REC	−0.7	4.9	0							

ENCODER SCHEMATIC DIAGRAM 4/6 (E12: Page CBA-10)

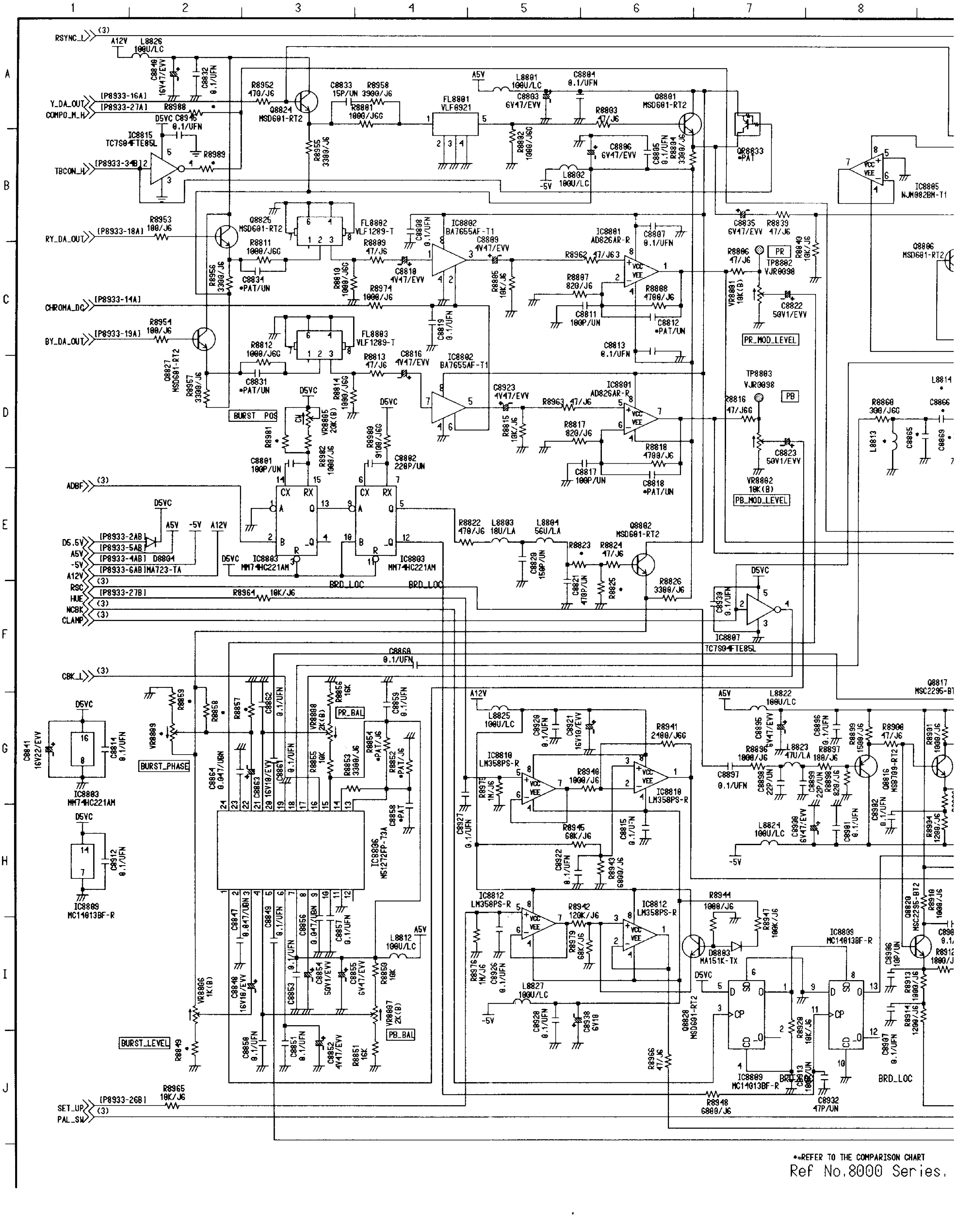

Ref No.8000 Series.

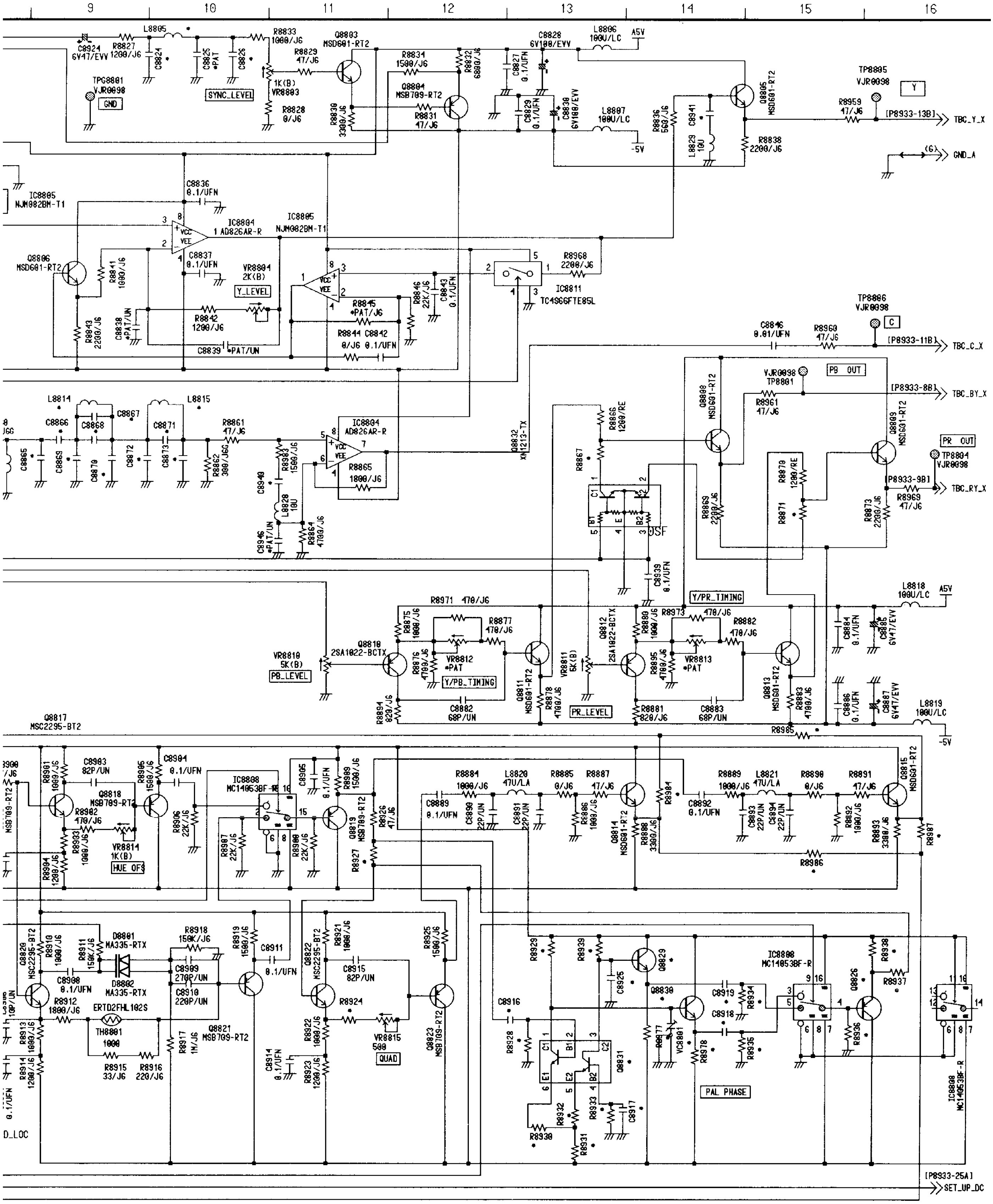

SON CHART
Series.

ENCODER DC VOLTAGE CHART

REF. NO.	IC8801									
MODE	1	2	3	4	5	6	7	8		
EJECT	-0.3	-0.1	-0.1	-4.9	-0.1	-0.1	-0.3	4.8		
REC	-0.2	0	0	-4.9	0	0	-0.3	4.9		
REF. NO.	IC8802									
MODE	1	2	3	4	5	6	7	8		
EJECT	2.8	3.3	2.1	0	2.1	3.3	2.8	4.8		
REC	2.8	3.4	2.1	0	2.1	3.4	2.8	4.9		
REF. NO.	IC8803									
MODE	1	2	3	4	5	6	7	8	9	10
EJECT	0	0.2	5.4	5.3	0.2	0	5.1	0	0.1	5.4
REC	0	0.2	5.4	5.3	0.2	0.2	5.1	0	0.1	5.4
REF. NO.	IC8803									
MODE	11	12	13	14	15	16				
EJECT	5.4	5.2	0.1	0	5.2	5.4				
REC	5.4	5.2	0.1	0	5.2	5.4				
REF. NO.	IC8804									
MODE	1	2	3	4	5	6	7	8		
EJECT	0.2	-0.1	-0.1	-4.9	0	-0.1	0	4.8		
REC	0.2	0	0	-4.9	0	0	0	4.9		
REF. NO.	IC8805									
MODE	1	2	3	4	5	6	7	8		
EJECT	0.5	0	0	-4.9	0	0	0	4.8		
REC	0.5	0	0	-4.9	0	0	0	0		
REF. NO.	IC8806									
MODE	1	2	3	4	5	6	7	8	9	10
EJECT	2.2	1.7	2.8	2.9	3.5	2.9	4.8	2.2	1.7	2.9
REC	2.3	1.8	2.8	2.9	3.5	2.9	4.8	2.2	1.7	2.9
REF. NO.	IC8806									
MODE	11	12	13	14	15	16	17	18	19	20
EJECT	0	1.8	1.4	1.4	4.8	4.2	5.2	3.0	0	3.5
REC	0	1.8	1.4	1.4	4.8	4.2	5.2	3.0	0	3.5
REF. NO.	IC8806									
MODE	21	22	23	24						
EJECT	2.9	2.8	1.7	2.2						
REC	2.9	2.8	1.7	2.3						
REF. NO.	IC8807									
MODE	1	2	3	4	5					
EJECT	0	0.1	0	5.2	5.4					
REC	0	0.1	0	5.2	5.4					
REF. NO.	IC8808									
MODE	1	2	3	4	5	6	7	8	9	10
EJECT	0	0.1	0	0.1	0.1	0	-4.8	0	2.6	1.0
REC	0	0	0.1	0.1	0.1	0	-4.8	0	2.6	1.0
REF. NO.	IC8808									
MODE	11	12	13	14	15	16				
EJECT	4.8	0	0	0	0.1	4.8				
REC	4.8	0	0	0	0.1	4.8				
REF. NO.	IC8809									
MODE	1	2	3	4	5	6	7	8	9	10
EJECT	0.2	5.2	1.1	0.2	5.4	0	0	0.2	0	0
REC	0.2	5.2	1.1	0.2	5.4	0	0	0.2	0	0
REF. NO.	IC8809									
MODE	11	12	13	14						
EJECT	5.1	4.3	1.0	5.4						
REC	5.2	4.4	1.0	5.4						
REF. NO.	IC8810									
MODE	1	2	3	4	5	6	7	8		
EJECT	3.5	1.0	1.0	-5.0	0	0	0	11.6		
REC	3.5	1.1	1.1	-5.0	0	0	0	11.6		
REF. NO.	IC8811									
MODE	1	2	3	4	5					
EJECT	0.2	0	0	0.1	4.8					
REC	0.2	0	0	0.1	4.9					
REF. NO.	IC8812									
MODE	1	2	3	4	5	6	7	8		
EJECT	0	0	0	-5.0	0	0	0	11.6		
REC	0	0	0	-5.0	0	0	0	11.6		
REF. NO.	IC8815									
MODE	1	2	3	4	5					
EJECT	0	5.1	0	0	5.4					
REC	0	5.1	0	0	5.4					

REF. NO.	Q8801			Q8802			Q8803		
MODE	E	C	B	E	C	B	E	C	B
EJECT	0.6	4.8	1.3	-0.5	4.8	0.1	-0.6	4.8	0
REC	0.6	4.8	1.3	-0.5	4.8	0.1	-0.6	4.8	0
REF. NO.	Q8804			Q8805			Q8806		
MODE	E	C	B	E	C	B	E	C	B
EJECT	0	-4.9	-0.6	-0.4	4.8	0.2	-0.2	4.8	0.5
REC	0	-4.9	-0.6	-0.5	4.8	0.2	-0.2	4.8	0.5
REF. NO.	Q8808			Q8809			Q8810		
MODE	E	C	B	E	C	B	E	C	B
EJECT	-0.5	4.9	0.1	-0.5	4.9	0.1	0.7	-1.7	0
REC	-0.5	4.9	0.1	-0.5	4.9	0.1	0.7	-1.7	0
REF. NO.	Q8811			Q8812			Q8813		
MODE	E	C	B	E	C	B	E	C	B
EJECT	0.1	4.9	0.7	0.7	-1.7	0	0.1	4.9	0.7
REC	0.1	4.9	0.7	0.7	-1.7	0	0.1	4.9	0.7
REF. NO.	Q8814			Q8815			Q8816		
MODE	E	C	B	E	C	B	E	C	B
EJECT	-0.6	4.8	0	-0.6	4.8	0	0.6	-4.8	0
REC	-0.6	4.8	0	-0.6	4.8	0	0.6	-4.8	0
REF. NO.	Q8817			Q8818			Q8819		
MODE	E	C	B	E	C	B	E	C	B
EJECT	0.3	2.7	0.6	0.6	-4.8	-0.1	0.7	-4.8	0.1
REC	0.4	2.7	0.6	0.7	-4.9	-0.1	0.7	-4.8	0.1
REF. NO.	Q8820			Q8821			Q8822		
MODE	E	C	B	E	C	B	E	C	B
EJECT	0.2	2.6	0.6	0.6	-4.8	-0.1	0.5	2.6	0.7
REC	0.2	2.6	0.6	0.6	-4.8	-0.1	0.5	2.6	0.7
REF. NO.	Q8823			Q8824			Q8825		
MODE	E	C	B	E	C	B	E	C	B
EJECT	0.7	-4.8	0.3	2.6	11.5	3.2	0.3	11.5	0.9
REC	0.7	-4.9	0.3	2.6	11.5	3.2	0.3	11.5	0.9
REF. NO.	Q8826			Q8827			Q8828		
MODE	E	C	B	E	C	B	E	C	B
EJECT	0.7	-4.8	0.1	0.3	11.5	0.9	0	11.6	-0.1
REC	0.7	-4.8	0.1	0.3	11.5	0.9	0	11.5	-0.1
REF. NO.	Q8829			Q8830					
MODE	E	C	B	E	C	B	E	C	B
EJECT	2.5	4.8	3.1	2.7	4.8	3.1			
REC	2.5	4.8	3.1	2.5	4.8	3.1			
REF. NO.	Q8831								
MODE	1	2	3	4	5	6			
EJECT	3.1	-0.5	3.1	-0.5	-1.3	-1.3			
REC	3.1	-0.5	3.1	-0.5	-1.3	-1.3			
REF. NO.	Q8832								
MODE	1	2	3	4	5				
EJECT	0.1	0.1	0	0	0				
REC	0.1	0.1	0	0	0				

TBC (2) CONNECTION SCHEMATIC DIAGRAM 5/6 (E12: Page CBA-10)

TBC_2
P8933
VJP3176B100

Signal (left)	A	NO	B	Signal (right)
GND_A (4)	D_GND	1	D_GND	GND_A (4)
D5.5V (4)	D5.5V	2	D5.5V	D5.5V (4)
GND_A (4)	A_GND	3	A_GND	GND_A (4)
-5V (4)	-5V	4	-5V	-5V (4)
A5V (4)	A5V	5	A5V	A5V (4)
A12V (4)	A12V	6	A12V	A12V (4)
GND_A (4)	GND	7	GND	GND_A (4)
GND_A (4)	GND	8	TBC_BY(X)	TBC_BY_X (4)
GND_A (4)	GND	9	TBC_RY(X)	TBC_RY_X (4)
GND_A (4)	GND	10	GND	GND_A (4)
GND_A (4)	GND	11	TBC_C(X)	TBC_C_X (4)
GND_A (4)	GND	12	GND	GND_A (4)
GND_A (4)	GND	13	TBC_Y(X)	TBC_Y_X (4)
CHROMA_DC (4)	CHROMA_DC	14		
		15	SDET_H	SDET_H (3)
Y_DA_OUT (4)	Y_DA_OUT	16	GND	GND_A (4)
GND_A (4)	GND	17	GND	GND_A (4)
RY_DA_OUT (4)	RY_DA_OUT	18	GND	GND_A (4)
BY_DA_OUT (4)	BY_DA_OUT	19	GND	GND_A (4)
GND_A (4)	GND	20	GND	GND_A (4)
RFRM (3)	RFRM	21	VP	VP (3)
EQP (3)	EQP	22	VIP	VIP (3)
R4FSC (3)	R4_FSC	23	GND	GND (3)
NCBK1 (3)	NCBK1	24	FHS	FHS (3)
SET_UP_DC (4)	SET_UP_DC	25	HD	
INCM_FRM (3)	REC_FRM	26	SETUP	SET_UP (4)
COMPO_M_H (4)	COMPO_M(H)	27	HUE	HUE (4)
ADV1 (3)	ADV_1	28	RSYNC	RSYNC
ADV2 (3)	ADV_2	29	SYSTEM_H	SYSTEM_H (3)
		30	SYS_SC_FINE	SC_FINE (1)
TBC_FSC (3)	TBC_FSC	31	SYS_SC_COARSE_1	SC_COARSE1
	REF_IN(L)	32	SYS_SC_COARSE_2	SC_COARSE2
ADV_SYNC (3)	ADV_SYNC	33	REF_PALP	REF_PALP (3)
	INCOM_IN(L)	34	TBC_ON(H)	TBCON_H (4)
GND (1)	GND	35	REF(X)	REF_VIDEO_X (1)
A12V (1)	A12V	36	A12V	A12V (1)
A5V (1)	A5V	37	A5V	A5V (1)
-5V (1)	-5V	38	-5V	-5V (1)
A_GND (1)	A_GND	39	A_GND	A_GND (1)
D5.5V (1)	D5.5V	40	D5.5V	D5.5V (1)
DGND (1)	D_GND	41	D_GND	DGND (1)
		42		
		43		
		44		
		45		
		46		
		47		
		48		
		49		
		50		

TBC (2) COMPARISON CHART 6/6 (E12: Page CBA-10)

REF	NTSC	PAL
C8626	15P/UN	*PAT/UN
C8627	15P/UN	*PAT/UN
C8646	*PAT/UFN	0. 1/UFN
C8647	*PAT/UFN	0. 1/UFN
C8648	*PAT/EVV	16V47/EVV
C8649	*PAT/UBN	0. 01/UBN
C8650	*PAT/UFN	0. 1/UFN
C8651	*PAT/EVN	35V2R2/EVN
C8652	*PAT/UN	1000P/UN
C8653	*PAT/UFN	0. 1/UFN
C8654	*PAT/EVV	16V47/EVV
C8655	*PAT/UN	220P/UN
C8661	*PAT/UFN	0. 1/UFN
C8726	*PAT/UN	330P/UN
C8812	*PAT/UN	*PAT/UN
C8818	*PAT/UN	*PAT/UN
C8824	18P/UN	33P/UN
C8825	*PAT/UN	*PAT/UN
C8826	100P/UN	120P/UN
C8831	*PAT/UN	*PAT/UN
C8834	*PAT/UN	*PAT/UN
C8838	*PAT/UN	*PAT/UN
C8839	*PAT/UN	*PAT/UN
C8858	*PAT/UN	*PAT/UN
C8865	33P/UN	27P/UN
C8866	270P/UN	220P/UN
C8867	68P/UN	27P/UN
C8868	7P/UN	*PAT/UN
C8869	22P/UN	*PAT/UN
C8870	120P/UN	100P/UN
C8871	10P/UN	47P/UN
C8872	*PAT/UN	10P/UN
C8873	*PAT/UN	33P/UN
C8916	*PAT/UFN	0. 1/UFN
C8917	*PAT/UFN	0. 1/UFN
C8918	*PAT/UFN	0. 1/UFN
C8919	*PAT/UFN	0. 1/UFN
C8925	*PAT/UN	56P/UN
C8940	12P/UN	5P/UN
C8941	12P/UN	5P/UN
C8642	*PAT/UN	*PAT/UN
D8602	*PAT	MA151K-TX
IC8610	*PAT	NJM082BM-T1
L8603	68U/LA	39U/LA
L8613	*PAT/LC	47U/LC
L8702	VLP0145-T	*PAT

REF	NTSC	PAL
L8805	47U/LA	100U/LA
L8813	27U/LA	15U/LA
L8814	6R8U/LA	5R6U/LA
L8815	5R6U/LA	6R8U/LA
Q8826	*PAT	MSB709-RT2
Q8829	*PAT	MSC2295-BT2
Q8830	*PAT	MSC2295-BT2
Q8831	*PAT	XN6534-TX
QR8833	*PAT	*PAT
R8625	82K/J6	47K/J6
R8626	10K/J6	15K/J6
R8627	*PAT/J6	8200/J6
R8628	15K/J6	15K/J6
R8629	*PAT/J6	10K/J6
R8632	*PAT/J6	470/J6
R8633	*PAT/J6	47K/J6
R8634	*PAT/J6	1000/J6
R8635	47K/J6	*PAT/J6
R8636	*PAT/J6	22K/J6
R8637	*PAT/J6	1M/J6
R8675	0/J6	*PAT/J6
R8676	*PAT/J6	0/J6
R8695	*PAT/J6	0/J6
R8701	*PAT/J6	0/J6
R8702	0/J6	*PAT/J6
R8706	27K/J6	10K/J6
R8708	4700/J6	2200/J6
R8711	*PAT/J6	*PAT/J6
R8712	*PAT/J6	*PAT/J6
R8714	*PAT/J6	*PAT/J6
R8716	*PAT/J6	*PAT/J6
R8735	56/J6	*PAT/J6
R8738	*PAT/J6	*PAT/J6
R8742	*PAT/J6	*PAT/J6
R8823	220/J6	270/J6
R8825	270/J6	560/J6
R8845	*PAT/J6	*PAT/J6
R8849	1200/J6	0/J6
R8852	*PAT/J6	*PAT/J6
R8854	*PAT/J6	*PAT/J6
R8857	0/J6	*PAT/J6
R8858	*PAT/J6	*PAT/J6
R8859	*PAT/J6	0/J6
R8867	2700/RE	0/J6
R8871	2700/RE	0/J6
R8924	180/J6	0/J6

REF	NTSC	PAL
R8927	0/J6	*PAT/J6
R8928	*PAT/J6	10K/J6
R8929	*PAT/J6	390/J6
R8930	*PAT/J6	180/J6
R8931	*PAT/J6	330/J6
R8932	*PAT/J6	180/J6
R8933	*PAT/J6	10K/J6
R8934	*PAT/J6	22K/J6
R8935	*PAT/J6	22K/J6
R8936	*PAT/J6	22K/J6
R8937	*PAT/J6	47/J6
R8938	*PAT/J6	1500/J6
R8939	*PAT/J6	390/J6
R8977	*PAT/J6	5600/J6
R8978	*PAT/J6	5600/J6
R8981	*PAT/J6	*PAT/J6
R8984	0/J6	*PAT/J6
R8985	*PAT/J6	0/J6
R8986	*PAT/J6	0/J6
R8987	0/J6	*PAT/J6
R8988	0/J6	*PAT/J6
R8989	*PAT/J6	0/J6
VC8801	*PAT	20P
VR8604	*PAT	5KB
VR8671	2KB	*PAT
VR8809	*PAT	1KB
VR8812	*PAT	*PAT
VR8813	*PAT	*PAT
X8601	VSX0338	VSX0270
X8602	*PAT	VSX0567
X8671	VSX0081	VSX0363

REAR AMP VIDEO SCHEMATIC DIAGRAM 1/4 (E28: Page CBA-13)

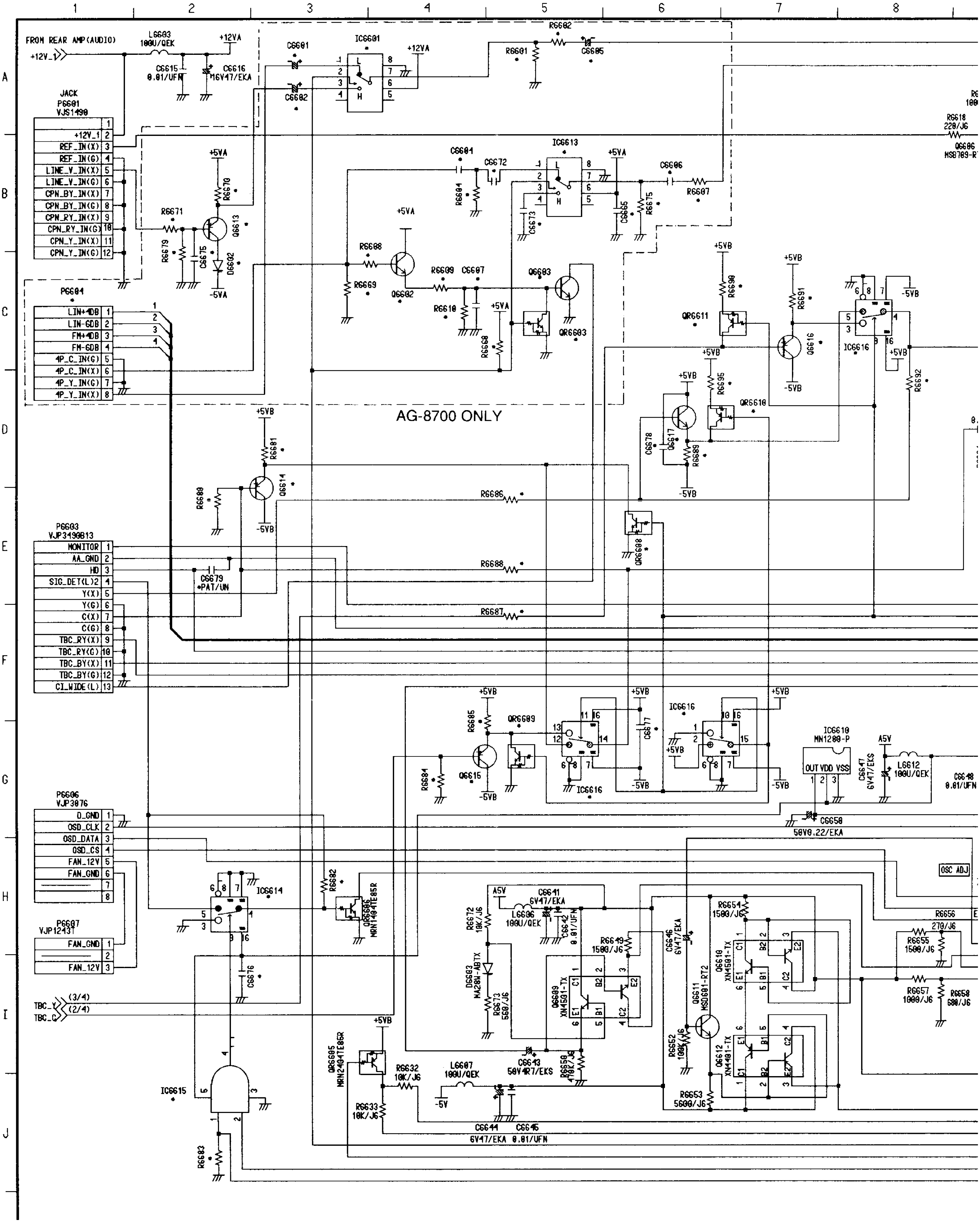

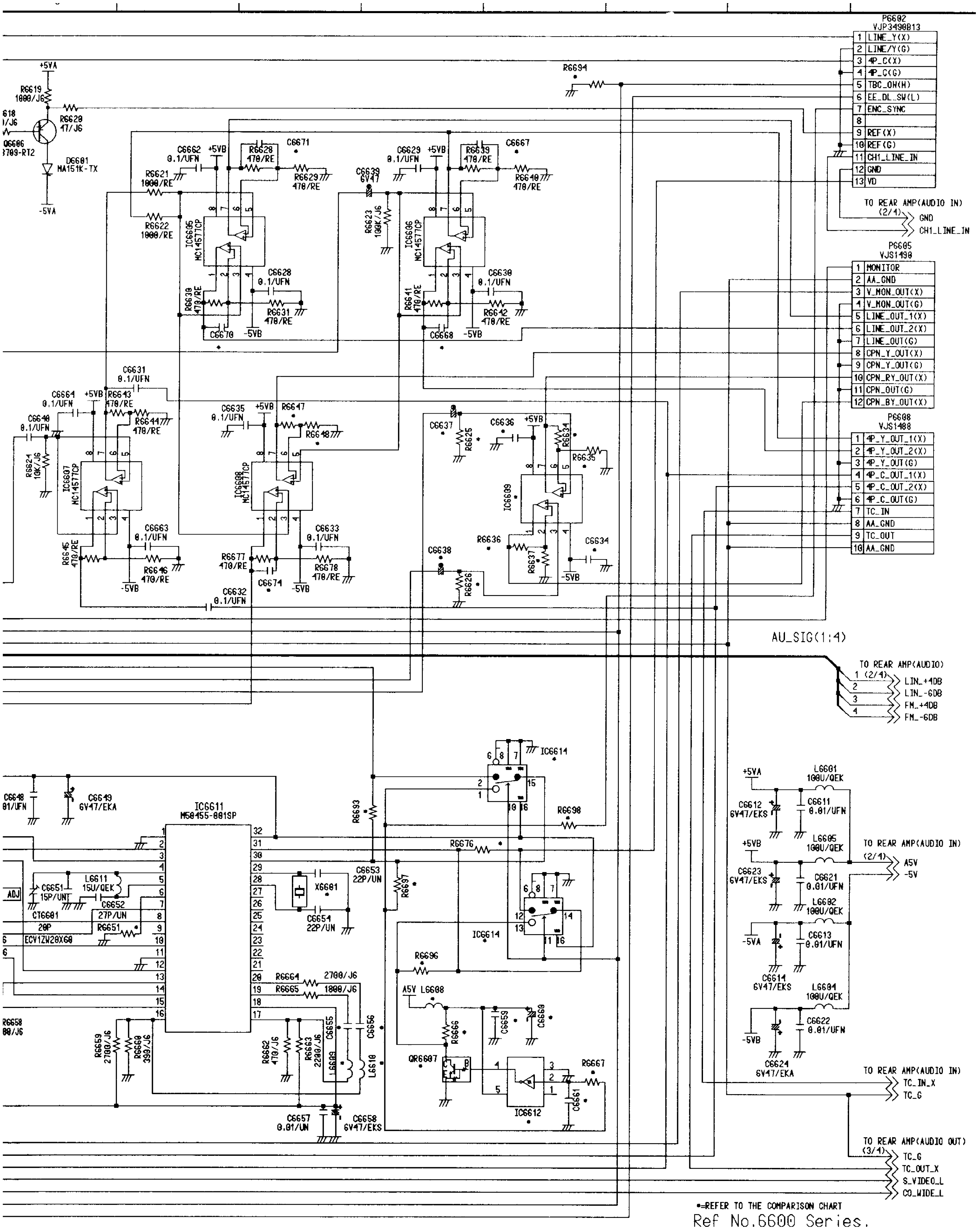

*=REFER TO THE COMPARISON CHART

Ref No.6600 Series.

REAR AMP VIDEO DC VOLTAGE CHART

REF. NO.	IC6601									
MODE	1	2	3	4	5	6	7	8		
EJECT	7.2	3.2	7.1	0	0	11.5	6.4	0		
REC	7.2	3.2	7.1	0	0	11.5	6.4	0		

REF. NO.	IC6605									
MODE	1	2	3	4	5	6	7	8		
EJECT	0	0	0	−4.7	0	0	0	4.3		
REC	0	0	0	−4.7	0	0	0	4.3		

REF. NO.	IC6606									
MODE	1	2	3	4	5	6	7	8		
EJECT	0	0	0	−4.7	0	0	0	4.3		
REC	0	0	0	−4.7	0	0	0	4.3		

REF. NO.	IC6607									
MODE	1	2	3	4	5	6	7	8		
EJECT	0	0	0	−4.7	0	0	0	4.3		
REC	0	0	0	−4.7	0	0	0	4.3		

REF. NO.	IC6608									
MODE	1	2	3	4	5	6	7	8		
EJECT	0.1	0	0	−4.3	0	0	0	4.3		
REC	0.1	0	0	−4.3	0	0	0	4.3		

REF. NO.	IC6609									
MODE	1	2	3	4	5	6	7	8		
EJECT	0.1	0.1	0.1	−4.3	0.1	0.1	0.1	4.3		
REC	0	0	0	−4.3	0	0	0	4.3		

REF. NO.	IC6610									
MODE	1	2	3							
EJECT	0	4.9	4.9							
REC	0	4.9	4.9							

REF. NO.	IC6611									
MODE	1	2	3	4	5	6	7	8	9	10
EJECT	0	5.0	4.9	2.2	2.1	0	5.1	0.1	0.5	4.8
REC	0	5.0	4.9	2.2	2.1	0	4.7	0.1	0.5	4.8

REF. NO.	IC6611									
MODE	11	12	13	14	15	16	17	18	19	20
EJECT	0	1.1	1.1	0.7	2.0	0.6	0.8	4.8	0.1	0.1
REC	0	1.1	1.1	0.7	2.0	0.6	0.9	4.8	0.1	0.1

REF. NO.	IC6611									
MODE	21	22	23	24	25	26	27	28	29	30
EJECT	0	0.1	0	0	0	0	4.7	2.3	2.3	3.9
REC	0	0.1	0	0	0	0	4.7	2.3	2.3	4.5

REF. NO.	IC6611									
MODE	31	32								
EJECT	5.1	4.9								
REC	4.9	4.9								

REF. NO.	IC6612									
MODE	1	2	3	4	5					
EJECT	0	0.1	0	0	5.0					
REC	0	4.5	0	0	4.9					

REF. NO.	IC6613									
MODE	1	2	3	4	5	6	7	8		
EJECT	3.0	3.2	2.9	0	0	4.9	2.2	0		
REC	3.0	3.2	2.9	0	0	0	2.2	0		

REF. NO.	IC6614									
MODE	1	2	3	4	5	6	7	8	9	10
EJECT	4.5	3.9	0	0.2	0.2	0	0	0	0	5.1
REC	4.5	3.9	0	0.2	0.2	0	0	0	0	5.1

REF. NO.	IC6614									
MODE	11	12	13	14	15	16				
EJECT	5.1	4.8	4.9	4.9	4.5	4.9				
REC	5.1	4.8	4.9	4.9	4.5	4.9				

REF. NO.	IC6615									
MODE	1	2	3	4	5					
EJECT	0	0.7	0	0	4.9					
REC	0.1	5.1	0	0	4.9					

REF. NO.	IC6616									
MODE	1	2	3	4	5	6	7	8	9	10
EJECT	0	4.3	0.3	0.3	2.6	0	−4.3	0	5.1	5.1
REC	0	4.3	0.3	0.3	2.6	0	−4.3	0	5.1	5.1

REF. NO.	IC6616									
MODE	11	12	13	14	15	16				
EJECT	5.1	0.1	0.7	0.7	0	4.3				
REC	5.1	0.1	0.7	0.7	0	4.3				

REF. NO.	Q6602			Q6603			Q6606			
MODE	E	C	B	E	C	B	E	C	B	
EJECT	0	4.9	0	0	5.1	0	0.7	−4.3	0	
REC	0	4.9	0	0	5.1	0	0.7	−4.3	0	

REF. NO.	Q6609									
MODE	1	2	3	4	5	6				
EJECT	4.8	1.7	1.1	4.8	1.3	1.7				
REC	4.8	1.7	1.1	4.8	1.3	1.7				

REF. NO.	Q6610						Q6611			
MODE	1	2	3	4	5	6	E	C	B	
EJECT	0.5	0.5	−0.2	4.8	0.5	−0.2	−0.8	4.8	−0.2	
REC	0.4	0.4	−0.2	4.8	0.4	−0.2	−0.8	4.8	−0.2	

REF. NO.	Q6612						Q6613			
MODE	1	2	3	4	5	6	E	C	B	
EJECT	−4.9	−0.8	−0.2	−4.9	−0.8	−0.2	0.8	−4.2	0.2	
REC	−4.9	−0.8	−0.2	−4.9	−0.8	−0.2	0.8	−4.2	0.2	

REF. NO.	Q6614			Q6615			Q6616			
MODE	E	C	B	E	C	B	E	C	B	
EJECT	0.7	−4.3	0.1	0.1	−4.3	0	0.7	−4.3	0	
REC	0.1	−4.3	0	0.7	−4.3	0.1	0.3	−4.3	−0.4	

REF. NO.	Q6617									
MODE	E	C	B							
EJECT	0.5	4.3	1.1							
REC	2.6	4.3	1.1							

REF. NO.	QR6603			QR6605			QR6606			
MODE	E	C	B	E	C	B	E	C	B	
EJECT	0	0	3.2	4.3	0	4.3	0	4.8	0.2	
REC	0	0	3.2	4.3	0	4.8	0	4.8	0.2	

REF. NO.	QR6607			QR6608			QR6609			
MODE	E	C	B	E	C	B	E	C	B	
EJECT	0	5.0	0	0	0.1	5.1	0	0.1	4.3	
REC	0	4.9	0	0	0.1	5.1	0	0.7	0	

REF. NO.	QR6610			QR6611						
MODE	E	C	B	E	C	B				
EJECT	4.3	0.4	4.3	0	0.7	0.7				
REC	2.8	2.6	0	4.3	−0.4	5.1				

IC6610
MN1280-P

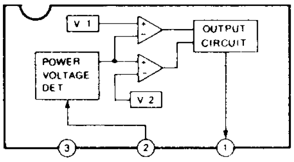

REAR AMP AUDIO IN SCHEMATIC DIAGRAM 2/4 (E28: Page CBA-13)

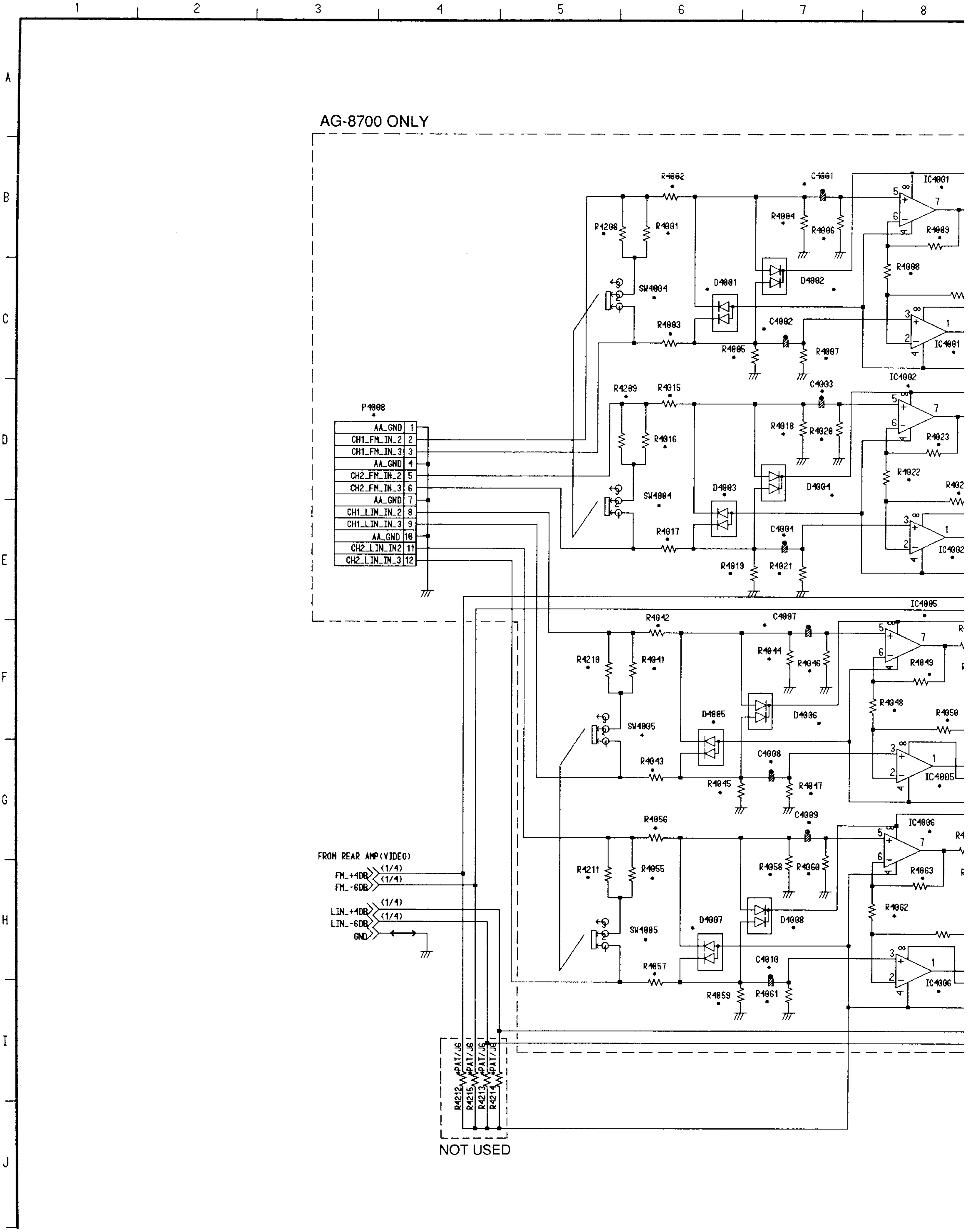

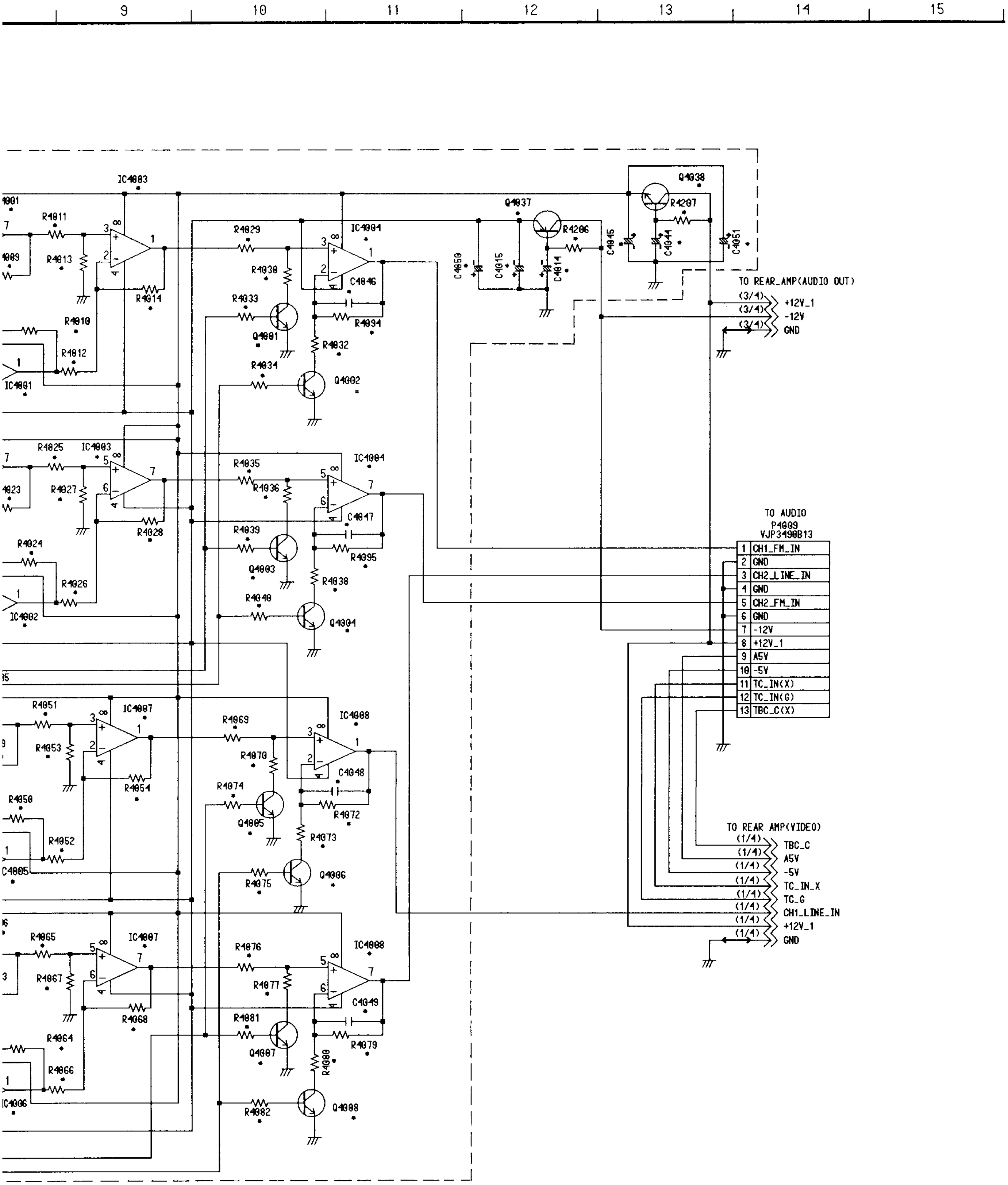

*=REFER TO THE COMPARISON CHART

Ref No.4000 Series.

REAR AMP AUDIO IN DC VOLTAGE CHART

REF. NO.	IC4014									
MODE	1	2	3	4	5	6	7	8		
EJECT	0	0	0	−11.4	0	0	0	10.9		
REC	0	0	0	−11.5	0	0	0	10.9		
REF. NO.	IC4015									
MODE	1	2	3	4	5	6	7	8		
EJECT	0	0	0	−11.4	0	0	0	10.9		
REC	0	0	0	−11.5	0	0	0	10.9		
REF. NO.	IC4016									
MODE	1	2	3	4	5	6	7	8		
EJECT	0	0	0	−11.4	0	0	0	10.9		
REC	0	0	0	−11.5	0	0	0	10.9		
REF. NO.	IC4017									
MODE	1	2	3	4	5	6	7	8		
EJECT	0	0	0	−11.4	0	0	0	10.9		
REC	0	0	0	−11.5	0	0	0	10.9		
REF. NO.	Q4010			Q4011			Q4015			
MODE	E	C	B	E	C	B	E	C	B	
EJECT	10.9	11.6	11.6	−11.5	−12.2	−12.1	0	0	0	
REC	10.8	11.6	11.6	−11.5	−12.2	−12.1	0	0	0	
REF. NO.	Q4016			Q4017			Q4021			
MODE	E	C	B	E	C	B	E	C	B	
EJECT	0	0	0	0	0	0	0	0	0	
REC	0	0	0	0	0	0	0	0	0	
REF. NO.	Q4022			Q4023			Q4027			
MODE	E	C	B	E	C	B	E	C	B	
EJECT	0	0	0	0	0	0	0	0	0	
REC	0	0	0	0	0	0	0	0	0	
REF. NO.	Q4028			Q4029			Q4033			
MODE	E	C	B	E	C	B	E	C	B	
EJECT	0	0	0	0	0	0	0	0	0	
REC	0	0	0	0	0	0	0	0	0	
REF. NO.	Q4034			Q4035			Q4036			
MODE	E	C	B	E	C	B	E	C	B	
EJECT	0	0	0	0	0	0	11.2	0	11.4	
REC	0	0	0	0	0	0	11.2	0	11.4	

REAR AMP AUDIO OUT SCHEMATIC DIAGRAM 3/4 (E28: Page CBA-13)

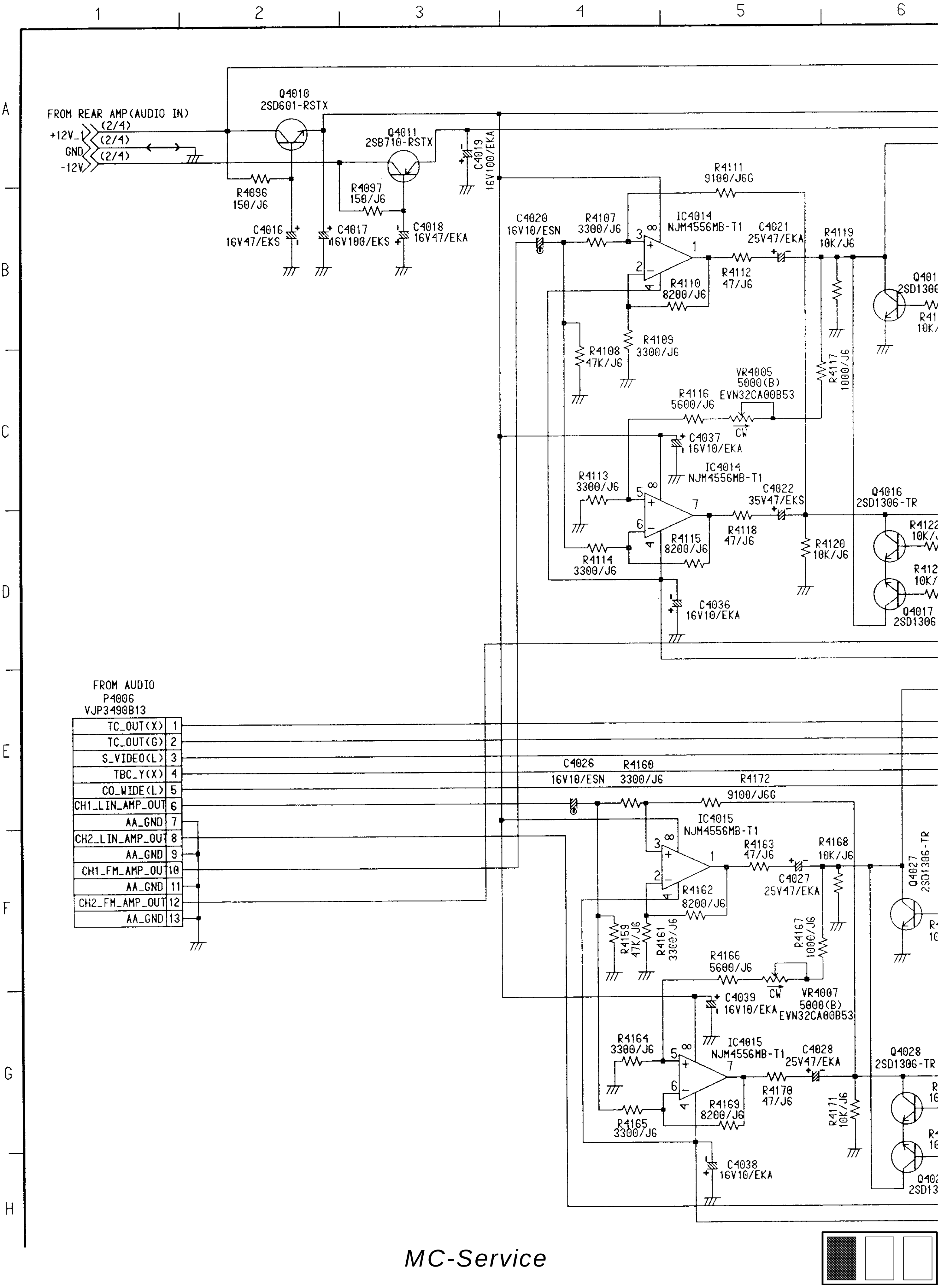

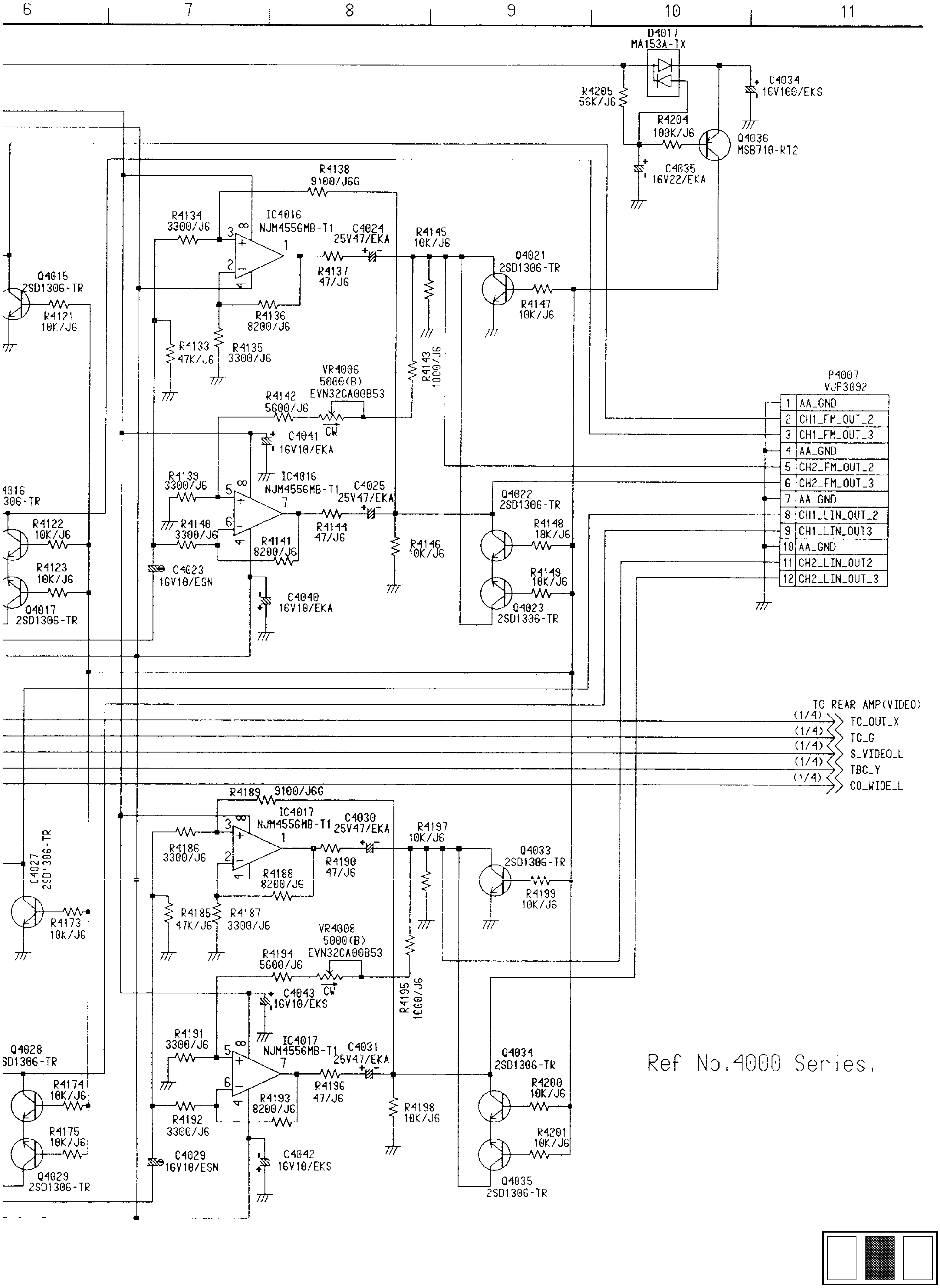
6
7
8
9
10
11
D4017
MA153A-TX
R4205
56K/J6
C4034
16V100/EKS
R4204
100K/J6
Q4036
MSB710-RT2
C4035
16V22/EKA
R4138
9100/J6G
R4134
3300/J6
IC4016
NJM4556MB-T1
C4024
25V47/EKA
R4145
10K/J6
Q4021
2SD1306-TR
Q4015
2SD1306-TR
R4121
10K/J6
R4137
47/J6
R4136
8200/J6
R4147
10K/J6
R4133
47K/J6
R4135
3300/J6
VR4006
5000(B)
EVN32CA00B53
R4143
1000/J6
R4142
5600/J6
C4041
16V10/EKA
CW
P4007
VJP3092
1 AA_GND
2 CH1_FM_OUT_2
3 CH1_FM_OUT_3
4 AA_GND
5 CH2_FM_OUT_2
6 CH2_FM_OUT_3
7 AA_GND
8 CH1_LIN_OUT_2
9 CH1_LIN_OUT3
10 AA_GND
11 CH2_LIN_OUT2
12 CH2_LIN_OUT_3
R4139
3300/J6
IC4016
NJM4556MB-T1
C4025
25V47/EKA
Q4022
2SD1306-TR
R4140
3300/J6
R4141
8200/J6
R4144
47/J6
R4146
10K/J6
R4148
10K/J6
R4122
10K/J6
R4123
10K/J6
Q4017
2SD1306-TR
C4023
16V10/ESN
C4040
16V10/EKA
R4149
10K/J6
Q4023
2SD1306-TR
TO REAR AMP(VIDEO)
(1/4) TC_OUT_X
(1/4) TC_G
(1/4) S_VIDEO_L
(1/4) TBC_Y
(1/4) CO_WIDE_L
R4189
9100/J6G
IC4017
NJM4556MB-T1
C4030
25V47/EKA
R4197
10K/J6
Q4033
2SD1306-TR
Q4027
2SD1306-TR
R4186
3300/J6
R4188
8200/J6
R4190
47/J6
R4199
10K/J6
R4173
10K/J6
R4185
47K/J6
R4187
3300/J6
VR4008
5000(B)
EVN32CA00B53
R4194
5600/J6
C4043
16V10/EKS
R4195
1000/J6
R4191
3300/J6
IC4017
NJM4556MB-T1
C4031
25V47/EKA
Q4034
2SD1306-TR
Q4028
2SD1306-TR
R4174
10K/J6
R4193
8200/J6
R4196
47/J6
R4198
10K/J6
R4200
10K/J6
R4192
3300/J6
R4175
10K/J6
C4029
16V10/ESN
C4042
16V10/EKS
R4201
10K/J6
Q4029
2SD1306-TR
Q4035
2SD1306-TR
Ref No.4000 Series.

REAR AMP AUDIO OUT DC VOLTAGE CHART

REF. NO.	IC4001									
MODE	1	2	3	4	5	6	7	8		
EJECT	0	0	0	−11.4	0	0	0	10.9		
REC	0	0	0	−11.4	0	0	0	10.9		
REF. NO.	IC4002									
MODE	1	2	3	4	5	6	7	8		
EJECT	0	0	0	−11.4	0	0	0	10.9		
REC	0	0	0	−11.4	0	0	0	10.9		
REF. NO.	IC4003									
MODE	1	2	3	4	5	6	7	8		
EJECT	0	0	0	−11.4	0	0	0	10.9		
REC	0	0	0	−11.4	0	0	0	10.9		
REF. NO.	IC4004									
MODE	1	2	3	4	5	6	7	8		
EJECT	0	0	0	−11.4	0	0	0	10.9		
REC	0	0	0	−11.4	0	0	0	10.9		
REF. NO.	IC4005									
MODE	1	2	3	4	5	6	7	8		
EJECT	0	0	0	−11.4	0	0	0	10.9		
REC	0	0	0	−11.4	0	0	0	10.9		
REF. NO.	IC4006									
MODE	1	2	3	4	5	6	7	8		
EJECT	0	0	0	−11.4	0	0	0	10.9		
REC	0	0	0	−11.4	0	0	0	10.9		
REF. NO.	IC4007									
MODE	1	2	3	4	5	6	7	8		
EJECT	0	0	0	−11.4	0	0	0	10.9		
REC	0	0	0	−11.5	0	0	0	10.9		
REF. NO.	IC4008									
MODE	1	2	3	4	5	6	7	8		
EJECT	0	0	0	−11.4	0	0	0	10.9		
REC	0	0	0	−11.5	0	0	0	10.9		
REF. NO.	Q4001			Q4002			Q4003			
MODE	E	C	B	E	C	B	E	C	B	
EJECT	0	0	−0.1	0	0	−0.1	0	0	0	
REC	0	0	−0.1	0	0	−0.1	0	0	0	
REF. NO.	Q4004			Q4005			Q4006			
MODE	E	C	B	E	C	B	E	C	B	
EJECT	0	0	−0.1	0	0	−0.1	0	0	−0.1	
REC	0	0	−0.1	0	0	−0.1	0	0	−0.1	
REF. NO.	Q4007			Q4008			Q4037			
MODE	E	C	B	E	C	B	E	C	B	
EJECT	0	0	−0.1	0	0	−0.1	−11.5	−12.2	−12.1	
REC	0	0	−0.1	0	0	−0.1	−11.5	−12.2	−12.1	
REF. NO.	Q4038									
MODE	E	C	B							
EJECT	10.9	11.6	11.6							
REC	10.9	11.6	11.5							

REAR AMP COMPARISON CHART 4/4 (E28: Page CBA-13)

REF	AG-8700	AG-8600
C4001	16V10/EVN	*PAT/EVN
C4002	16V10/EVN	*PAT/EVN
C4003	16V10/EVN	*PAT/EVN
C4004	16V10/EVN	*PAT/EVN
C4007	16V10/EVN	*PAT/EVN
C4008	16V10/EVN	*PAT/EVN
C4009	16V10/EVN	*PAT/EVN
C4010	16V10/EVN	*PAT/EVN
C4014	16V47/EVV	*PAT/EVV
C4015	16V47/EVV	*PAT/EVV
C4044	16V47/EVV	*PAT/EVV
C4045	16V47/EVV	*PAT/EVV
C4046	33P/UN	*PAT/UN
C4047	33P/UN	*PAT/UN
C4048	33P/UN	*PAT/UN
C4049	33P/UN	*PAT/UN
C4050	16V47/EVV	*PAT/EVV
C4051	16V47/EVV	*PAT/EVV
C6601	10V47/EKA	*PAT/EKA
C6602	10V47/EKA	*PAT/EKA
C6604	0. 1/UFN	*PAT/UFN
C6605	10V100/EKA	*PAT/EKA
C6606	0. 1/UFN	*PAT/UFN
C6607	0. 1/UFN	*PAT/UFN
C6634	0. 1/UFN	0. 1/UFN
C6636	0. 1/UFN	0. 1/UFN
C6637	6V47	6V47
C6638	6V47	6V47
C6655	39P/UN	39P/UN
C6656	39P/UN	39P/UN
C6659	0. 01/UFN	0. 01/UFN
C6660	6V47/EKA	6V47/EKA
C6661	1000P/UBN	1000P/UBN
C6665	0. 01/UFN	*PAT/UFN
C6667	27P/UN	27P/UN
C6668	27P/UN	27P/UN
C6670	27P/UN	27P/UN
C6671	27P/UN	27P/UN
C6672	0. 1/UFN	*PAT/UFN
C6673	0. 1/UFN	*PAT/UFN
C6674	27P/UN	27P/UN

REF	AG-8700	AG-8600
C6675	15P/UN	*PAT/UN
C6676	0. 1/UFN	0. 1/UFN
C6677	0. 1/UFN	0. 1/UFN
C6678	0. 1/UFN	0. 1/UFN
C6679	*PAT/UN	*PAT/UN
D4001	MA151WA-TX	*PAT
D4002	MA151WK-TX	*PAT
D4003	MA151WA-TX	*PAT
D4004	MA151WK-TX	*PAT
D4005	MA151WA-TX	*PAT
D4006	MA151WK-TX	*PAT
D4007	MA151WA-TX	*PAT
D4008	MA151WK-TX	*PAT
D6602	MA151K-TX	*PAT
IC4001	NJM4556MB-T1	*PAT
IC4002	NJM4556MB-T1	*PAT
IC4003	NJM4556MB-T1	*PAT
IC4004	AN6558S	*PAT
IC4005	NJM4556MB-T1	*PAT
IC4006	NJM4556MB-T1	*PAT
IC4007	NJM4556MB-T1	*PAT
IC4008	AN6558S	*PAT
IC6601	NJM2233BMAT1	*PAT
IC6609	MC14577CP	MC14577CP
IC6612	TC4S584FT85R	TC4S584FT85R
IC6613	NJM2233BMAT1	*PAT
IC6614	MC74HC4053FR	MC74HC4053FR
IC6615	TC7S08FTE85R	TC7S08FTE85R
IC6616	MC74HC4053FR	MC74HC4053FR
L6608	33U/QEK	33U/QEK
L6609	47U/QEK	47U/QEK
L6610	47U/QEK	47U/QEK
P4008	VJP3092	*PAT
P6604	VJS1468	*PAT
Q4001	MSD601-RT2	*PAT
Q4002	MSD601-RT2	*PAT
Q4003	MSD601-RT2	*PAT
Q4004	MSD601-RT2	*PAT
Q4005	MSD601-RT2	*PAT
Q4006	MSD601-RT2	*PAT
Q4007	MSD601-RT2	*PAT
Q4008	MSD601-RT2	*PAT

REF	AG-8700	AG-8600
Q4037	2SB710-RSTX	*PAT
Q4038	2SD602-RSTX	*PAT
Q6602	MSD601-RT2	*PAT
Q6603	MSD601-RT2	*PAT
Q6613	MSB709-RT2	*PAT
Q6614	MSB709-RT2	MSB709-RT2
Q6615	MSB709-RT2	MSB709-RT2
Q6616	MSB709-RT2	MSB709-RT2
Q6617	MSD601-RT2	MSD601-RT2
QR6603	MRN1404TE85R	*PAT
QR6607	MRN1404TE85R	MRN1404TE85R
QR6608	MRN1404TE85R	MRN1404TE85R
QR6609	MRN1404TE85R	MRN1404TE85R
QR6610	MRN2404TE85R	MRN2404TE85R
QR6611	MRN2404TE85R	MRN2404TE85R
R4001	680/J6	*PAT/J6
R4002	47K/J6	*PAT/J6
R4003	47K/J6	*PAT/J6
R4004	8200/J6	*PAT/J6
R4005	8200/J6	*PAT/J6
R4006	100K/J6	*PAT/J6
R4007	100K/J6	*PAT/J6
R4008	3300/RE	*PAT/J6
R4009	4700/RE	*PAT/J6
R4010	4700/RE	*PAT/J6
R4011	4700/RE	*PAT/J6
R4012	4700/RE	*PAT/J6
R4013	4700/RE	*PAT/J6
R4014	4700/RE	*PAT/J6
R4015	47K/J6	*PAT/J6
R4016	680/J6	*PAT/J6
R4017	47K/J6	*PAT/J6
R4018	8200/J6	*PAT/J6
R4019	8200/J6	*PAT/J6
R4020	100K/J6	*PAT/J6
R4021	100K/J6	*PAT/J6
R4022	3300/RE	*PAT/J6
R4023	4700/RE	*PAT/J6
R4024	4700/RE	*PAT/J6
R4025	4700/RE	*PAT/J6
R4026	4700/RE	*PAT/J6

REF	AG-8700	AG-8600
R4070	18K/J6	*PAT/J6
R4072	10K/J6	*PAT/J6
R4073	10K/J6	*PAT/J6
R4074	10K/J6	*PAT/J6
R4075	10K/J6	*PAT/J6
R4076	10K/J6	*PAT/J6
R4077	18K/J6	*PAT/J6
R4079	10K/J6	*PAT/J6
R4080	10K/J6	*PAT/J6
R4081	10K/J6	*PAT/J6
R4082	10K/J6	*PAT/J6
R4094	10K/J6	*PAT/J6
R4095	10K/J6	*PAT/J6
R4206	150/J6	*PAT/J6
R4207	150/J6	*PAT/J6
R4208	5600/J6	*PAT/J6
R4209	5600/J6	*PAT/J6
R4210	5600/J6	*PAT/J6
R4211	5600/J6	*PAT/J6
R4212	*PAT/J6	*PAT/J6
R4213	*PAT/J6	*PAT/J6
R4214	*PAT/J6	*PAT/J6
R4215	*PAT/J6	*PAT/J6
R6601	3300/J6	*PAT/J6
R6602	47/J6	*PAT/J6
R6604	75/G6	*PAT/J6
R6607	47/J6	*PAT/J6
R6608	1000/J6	*PAT/J6
R6609	4700/J6	*PAT/J6
R6610	2700/J6	*PAT/J6
R6625	10K/J6	10K/J6
R6626	10K/J6	10K/J6
R6634	470/RE	470/RE
R6635	470/RE	470/RE
R6636	470/RE	470/RE
R6637	470/RE	470/RE
R6647	470/RE	470/RE
R6648	470/RE	470/RE
R6651	0/J6	0/J6
R6666	3300/J6	3300/J6
R6667	22K/J6	22K/J6

REF	AG-8700	AG-8600
R6668	10K/J6	*PAT/J6
R6669	120K/J6	*PAT/J6
R6670	1000/J6	*PAT/J6
R6671	220/J6	*PAT/J6
R6675	3300/J6	*PAT/J6
R6676	*PAT/J6	*PAT/J6
R6679	10K/J6	*PAT/J6
R6680	10K/J6	10K/J6
R6681	1500/J6	1500/J6
R6682	*PAT/J6	*PAT/J6
R6683	100K/J6	100K/J6
R6684	10K/J6	10K/J6
R6685	1500/J6	1500/J6
R6686	33/J6	33/J6
R6687	33/J6	33/J6
R6688	*PAT/J6	*PAT/J6
R6689	1500/J6	1500/J6
R6690	1000/J6	1000/J6
R6691	1500/J6	1500/J6
R6692	*PAT/J6	*PAT/J6
R6693	*PAT/J6	*PAT/J6
R6694	100K/J6	100K/J6
R6695	330/J6	330/J6
R6696	*PAT/J6	*PAT/J6
R6697	*PAT/J6	*PAT/J6
R6698	0/J6	0/J6
SW4004	VSS0208	*PAT
SW4005	VSS0208	*PAT
X6601	VSX0316	VSX0316

REAR JACK SCHEMATIC DIAGRAM 1/2 (E29: Page CBA-14)

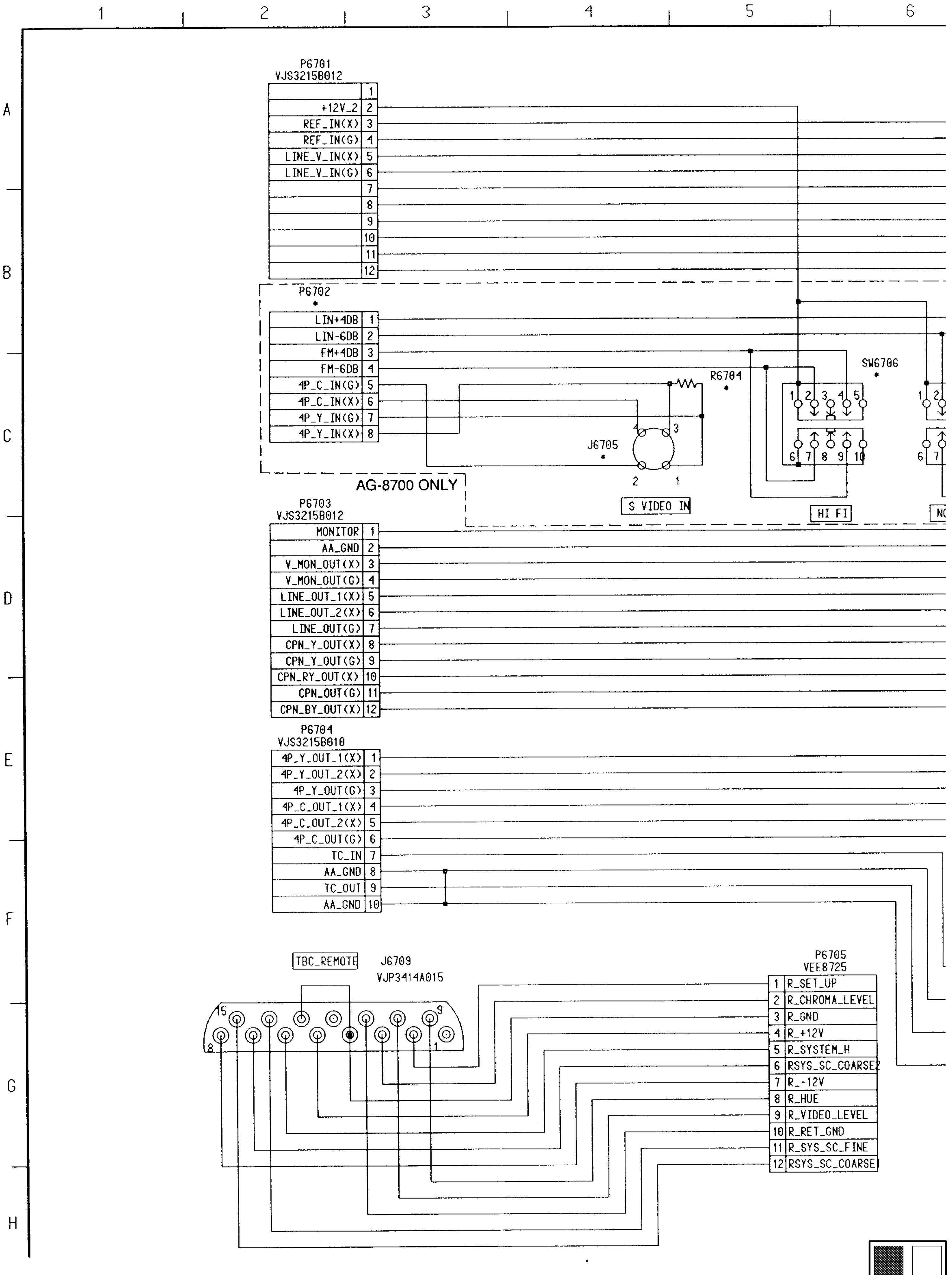

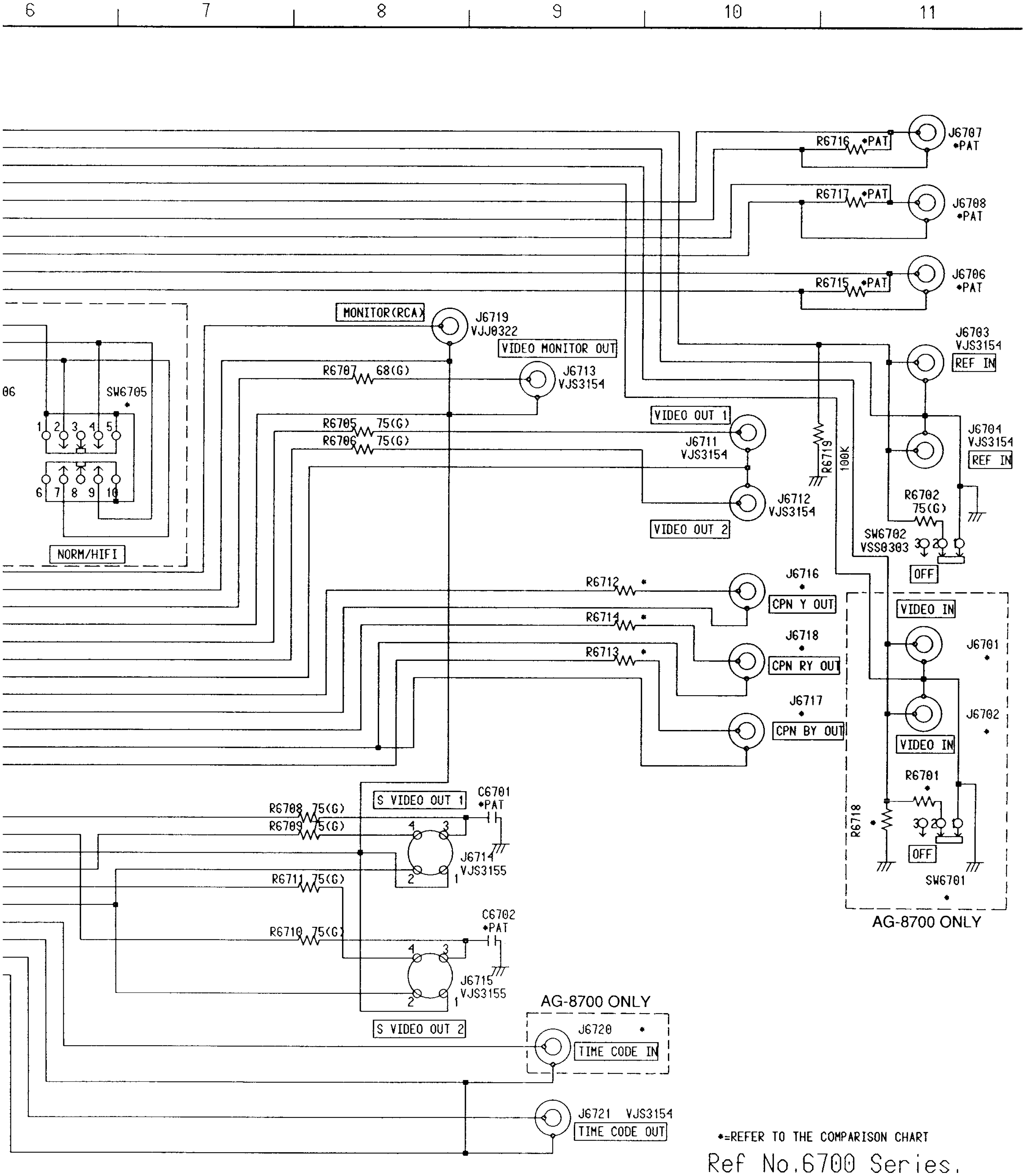

*=REFER TO THE COMPARISON CHART

Ref No.6700 Series.

REAR JACK COMPARISON CHART 2/2
(E29: Page CBA-14)

REF	AG-8700	AG-8600
C6701	*PAT	*PAT
C6702	*PAT	*PAT
J6701	VJS3154	*PAT
J6702	VJS3154	*PAT
J6705	VJS3155	*PAT
J6706	*PAT	*PAT
J6707	*PAT	*PAT
J6708	*PAT	*PAT
J6716	VJS3154	VJS3154
J6717	VJS3154	VJS3154
J6718	VJS3154	VJS3154
J6720	VJS3154	*PAT
P6702	VJS3215B008	*PAT
R6701	75(G)	*PAT
R6704	75(G)	*PAT
R6712	75(G)	75(G)
R6713	75(G)	75(G)
R6714	75(G)	75(G)
R6715	*PAT	*PAT
R6716	*PAT	*PAT
R6717	*PAT	*PAT
R6718	100K/DS	*PAT
SW6701	VSS0303	*PAT
SW6705	VSS0390	*PAT
SW6706	VSS0390	*PAT

MOTHER SCHEMATIC DIAGRAM (E4: Page CBA-4)

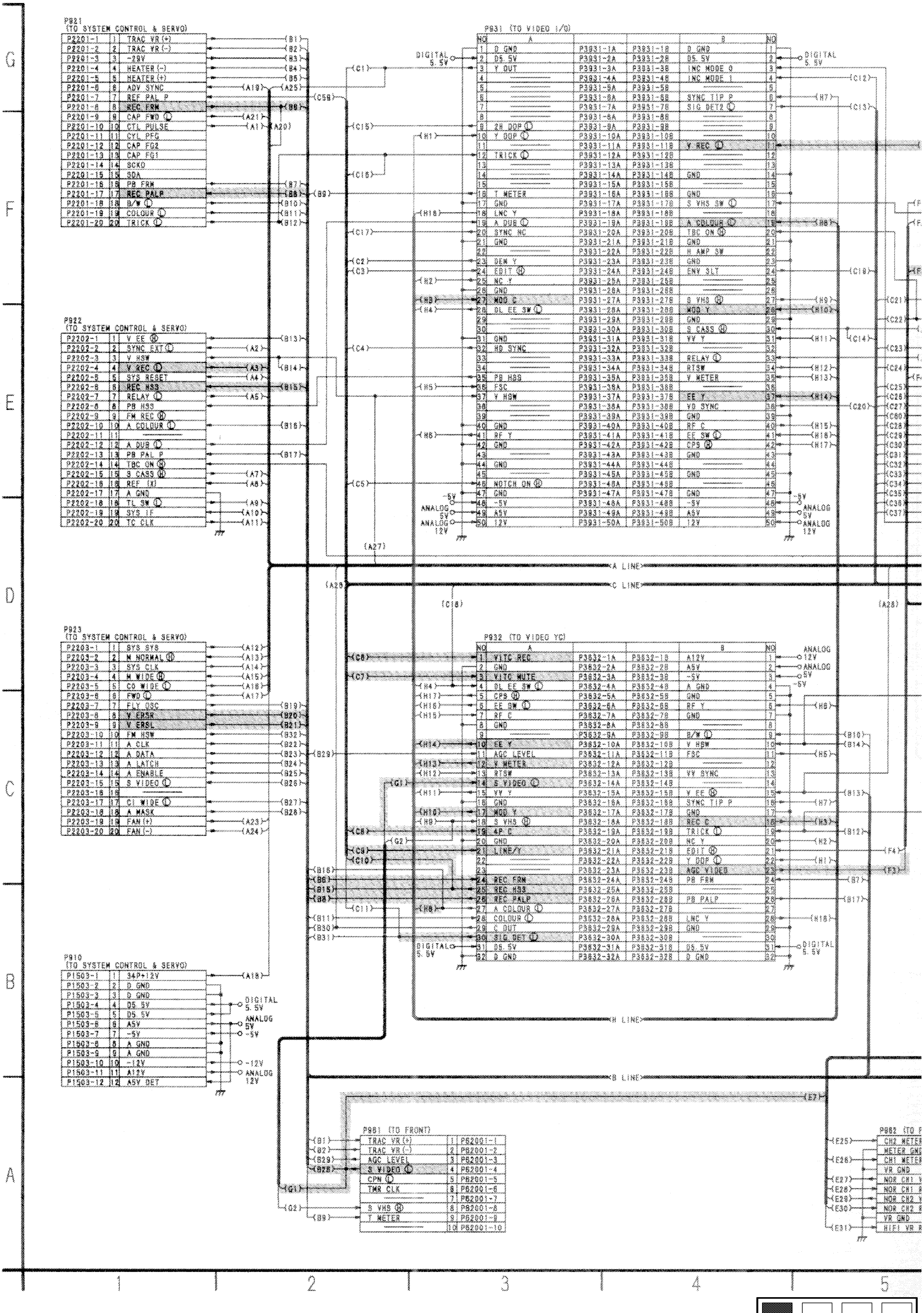

AG-8700 only have components and/or wires identifided by shade

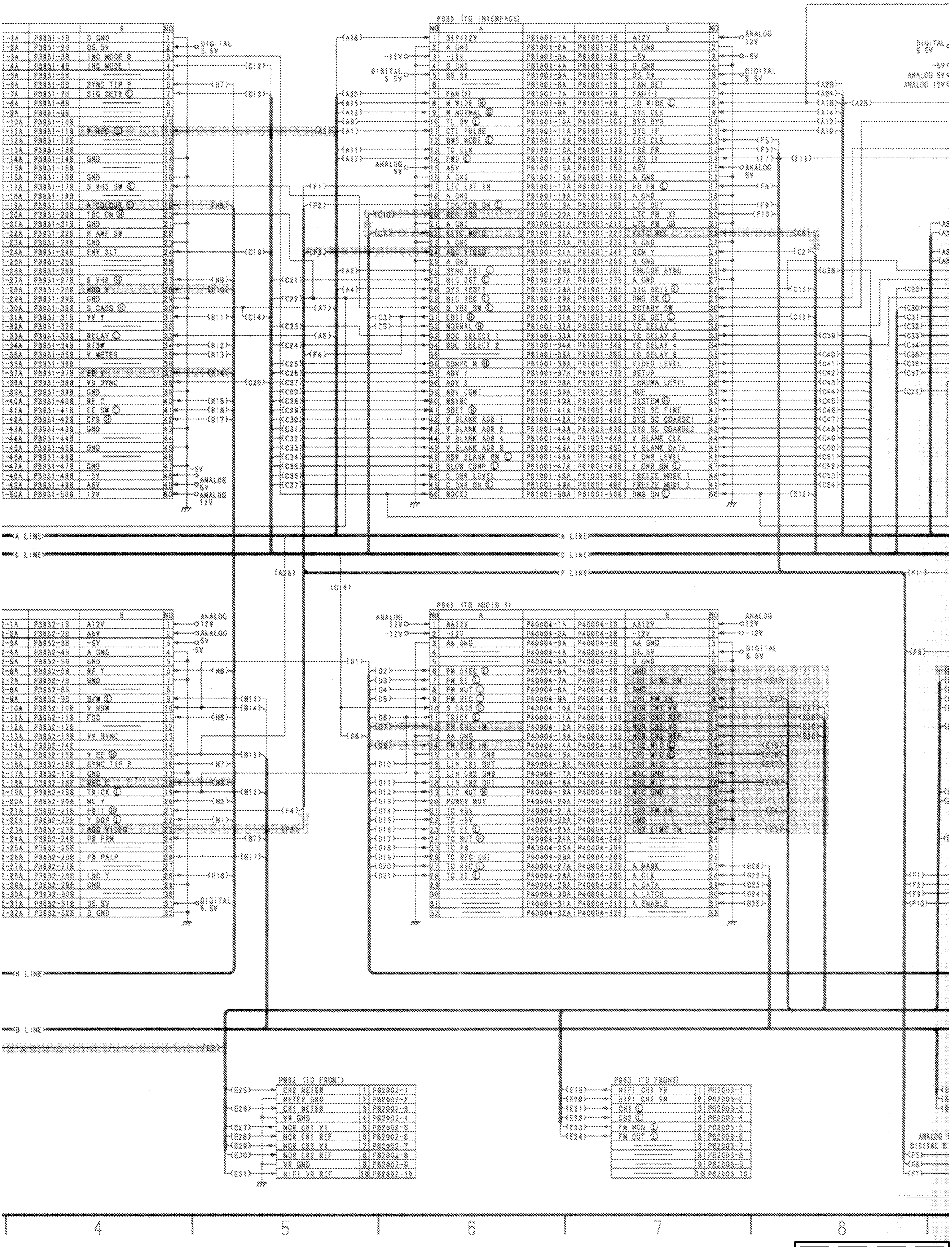

4 5 6 7 8

mark on this schematic diagram.

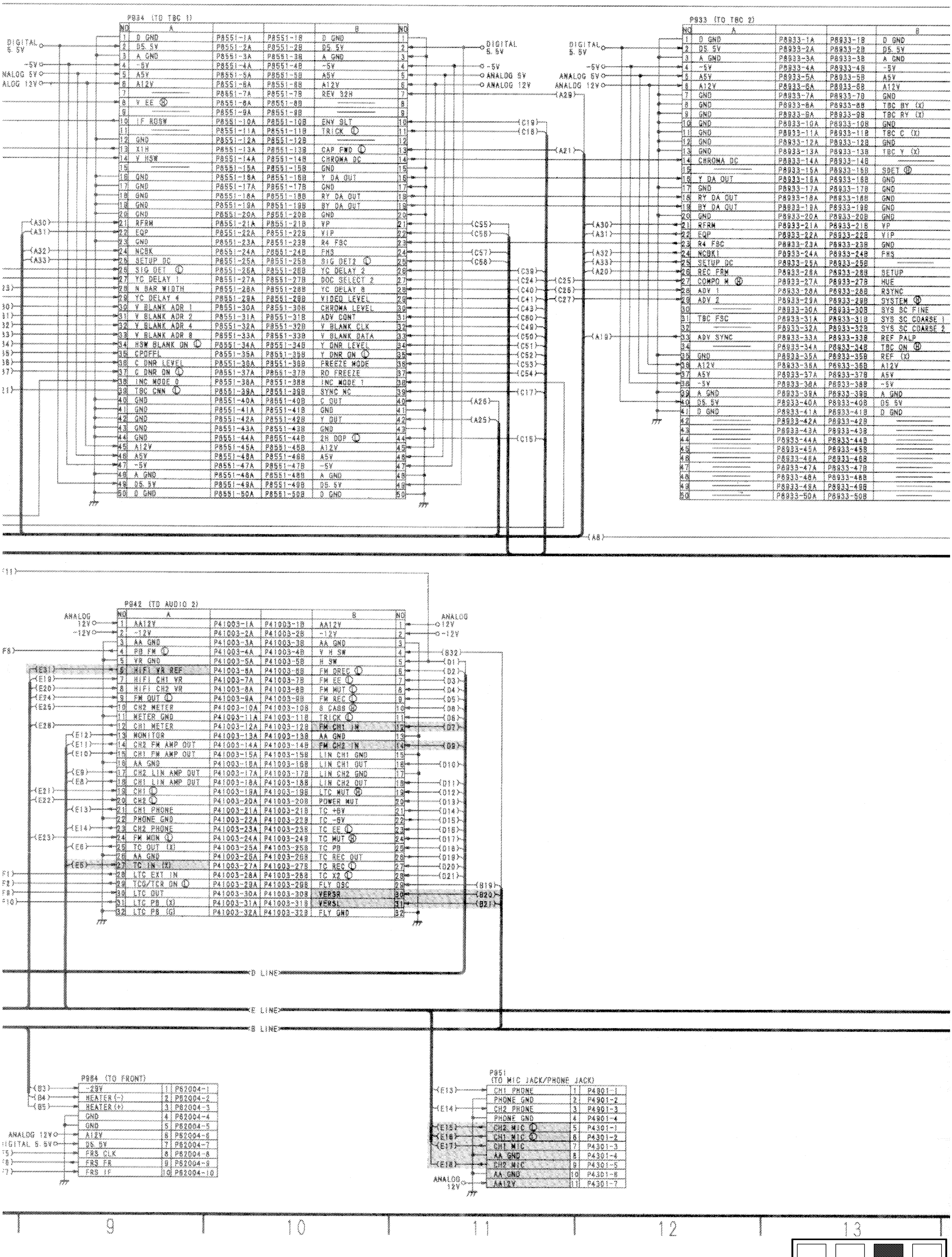

TBC 2)
A
B
NO
P8933-1A P8933-1B D GND 1
P8933-2A P8933-2B DS 5V 2
P8933-3A P8933-3B A GND 3
P8933-4A P8933-4B -5V 4
P8933-5A P8933-5B A5V 5
P8933-6A P8933-6B A12V 6
P8933-7A P8933-7B GND 7
P8933-8A P8933-8B TBC BY (X) 8
P8933-9A P8933-9B TBC RY (X) 9
P8933-10A P8933-10B GND 10
P8933-11A P8933-11B TBC C (X) 11
P8933-12A P8933-12B GND 12
P8933-13A P8933-13B TBC Y (X) 13
P8933-14A P8933-14B 14
P8933-15A P8933-15B SDET 15
P8933-16A P8933-16B GND 16
P8933-17A P8933-17B GND 17
P8933-18A P8933-18B GND 18
P8933-19A P8933-19B GND 19
P8933-20A P8933-20B GND 20
P8933-21A P8933-21B VP 21
P8933-22A P8933-22B VIP 22
P8933-23A P8933-23B GND 23
P8933-24A P8933-24B FHS 24
P8933-25A P8933-25B 25
P8933-26A P8933-26B SETUP 26
P8933-27A P8933-27B HUE 27
P8933-28A P8933-28B RSYNC 28
P8933-29A P8933-29B SYSTEM 29
P8933-30A P8933-30B SYS SC FINE 30
P8933-31A P8933-31B SYS SC COARSE 1 31
P8933-32A P8933-32B SYS SC COARSE 2 32
P8933-33A P8933-33B REF PALP 33
P8933-34A P8933-34B TBC ON 34
P8933-35A P8933-35B REF (X) 35
P8933-36A P8933-36B A12V 36
P8933-37A P8933-37B A5V 37
P8933-38A P8933-38B -5V 38
P8933-39A P8933-39B A GND 39
P8933-40A P8933-40B DS 5V 40
P8933-41A P8933-41B D GND 41
P8933-42A P8933-42B 42
P8933-43A P8933-43B 43
P8933-44A P8933-44B 44
P8933-45A P8933-45B 45
P8933-46A P8933-46B 46
P8933-47A P8933-47B 47
P8933-48A P8933-48B 48
P8933-49A P8933-49B 49
P8933-50A P8933-50B 50
DIGITAL 5.5V
-5V
ANALOG 5V
ANALOG 12V
(J1) (J2) (J3) (J4) (C29) (C55) (C56) (C57) (C42) (C44) (C28) (C45) (C46) (C47) (C48) (C59) (C22)
J LINE
(C9) (C8) (C18) (C38) (C20) (E1)
P971 (TO REAR AMP)
LINE/Y (X) 1 P6602-1
LINE/Y (G) 2 P6602-2
4P C (X) 3 P6602-3
4P C (G) 4 P6602-4
TBC ON (H) 5 P6602-5
EE DL SW (L) 6 P6602-6
ENC SYNC 7 P6602-7
8 P6602-8
REF (X) 9 P6602-9
REF (G) 10 P6602-10
CH1 LINE IN 11 P6602-11
GND 12 P6602-12
VD 13 P6602-13
(E2) (E3) (E4) (E5) (J3)
-12V
ANALOG 12V
ANALOG 5V
-5V
P972 (TO REAR AMP)
CH1 FM IN 1 P4009-1
GND 2 P4009-2
CH2 LINE IN 3 P4009-3
GND 4 P4009-4
CH2 FM IN 5 P4009-5
GND 6 P4009-6
-12V 7 P4009-7
+12V 8 P4009-8
A5V 9 P4009-9
-5V 10 P4009-10
TC IN (X) 11 P4009-11
TC IN (G) 12 P4009-12
TBC C (X) 13 P4009-13
(E6) (E7) (J4) (E8) (E9) (E10) (E11)
P973 (TO REAR AMP)
TC OUT (X) 1 P4006-1
TC OUT (G) 2 P4006-2
S VIDEO (L) 3 P4006-3
TBC Y (X) 4 P4006-4
CO WIDE (L) 5 P4006-5
CH1 LIN AMP OUT 6 P4006-6
GND 7 P4006-7
CH2 LIN AMP OUT 8 P4006-8
GND 9 P4006-9
CH1 FM AMP OUT 10 P4006-10
GND 11 P4006-11
CH2 FM AMP OUT 12 P4006-12
GND 13 P4006-13
(C58) (E12) (C4) (C1) (B31) (B30) (J2) (J1) (B27)
P974 (TO REAR AMP)
MONITOR 1 P6603-1
AA GND 2 P6603-2
HD 3 P6603-3
SIG DET (L) 2 4 P6603-4
Y (X) 5 P6603-5
Y (G) 6 P6603-6
C (X) 7 P6603-7
C (G) 8 P6603-8
TBC RY (X) 9 P6603-9
TBC RY (G) 10 P6603-10
TBC BY (X) 11 P6603-11
TBC BY (G) 12 P6603-12
C1 WIDE (L) 13 P6603-13
13
14
15
16

INTERCONNECTION SCHEMATIC DIAGRAM

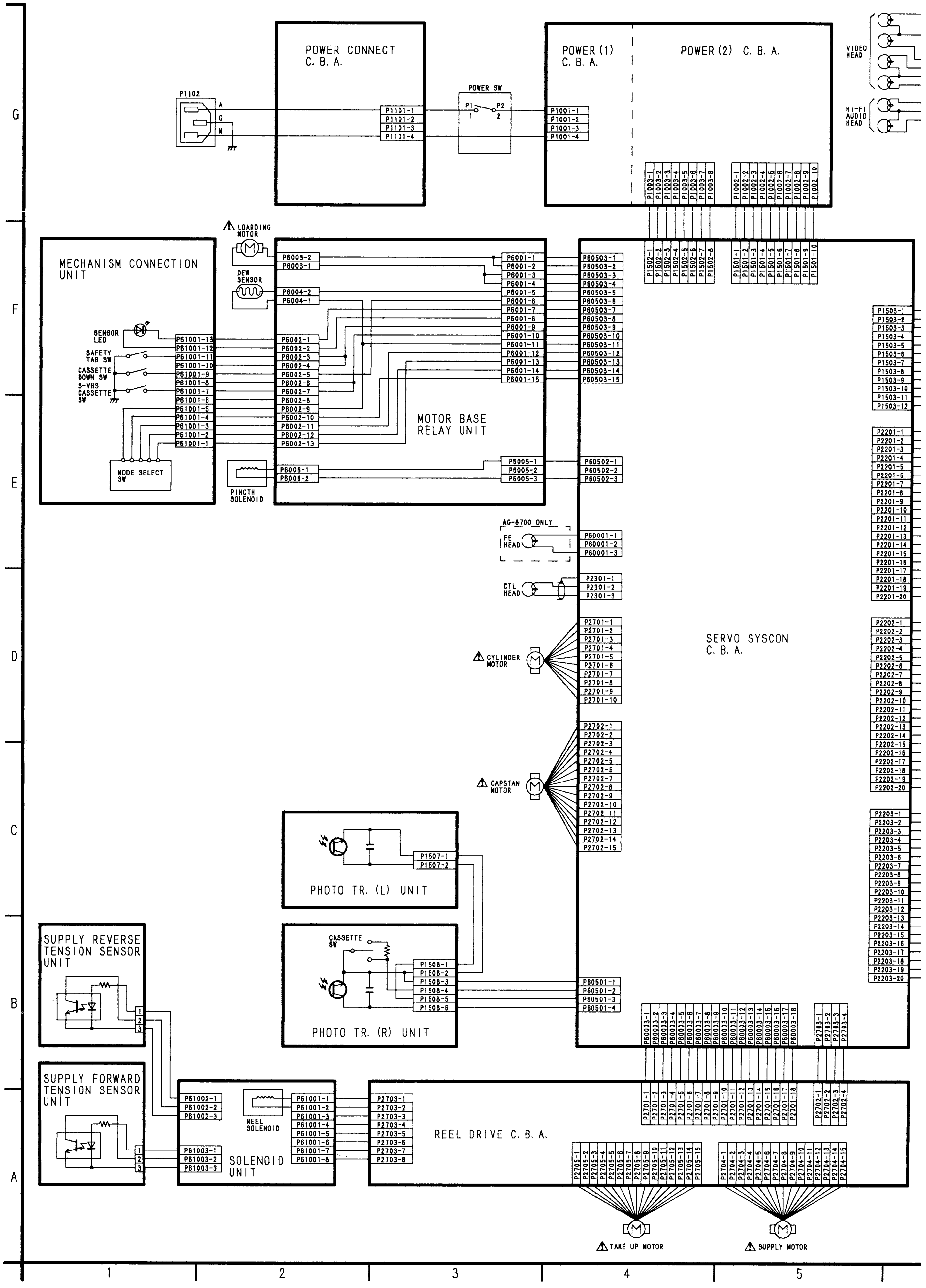

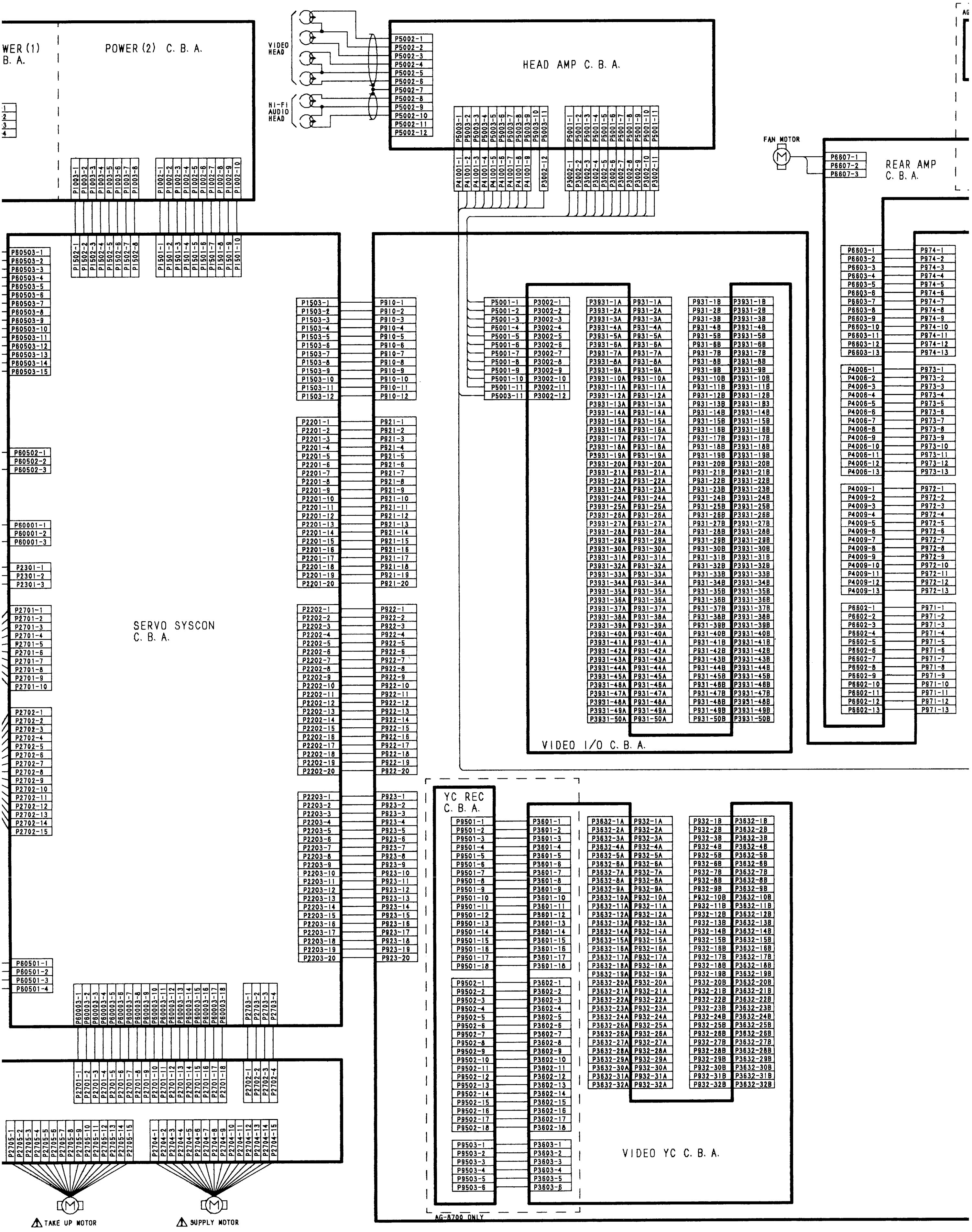

WER (1)
B. A.
POWER (2) C. B. A.
VIDEO HEAD
HI-FI AUDIO HEAD
HEAD AMP C. B. A.
FAN MOTOR
REAR AMP
C. B. A.
SERVO SYSCON
C. B. A.
VIDEO I/O C. B. A.
YC REC
C. B. A.
VIDEO YC C. B. A.
AG-8700 ONLY
TAKE UP MOTOR
SUPPLY MOTOR

4 5 6 7 8 9

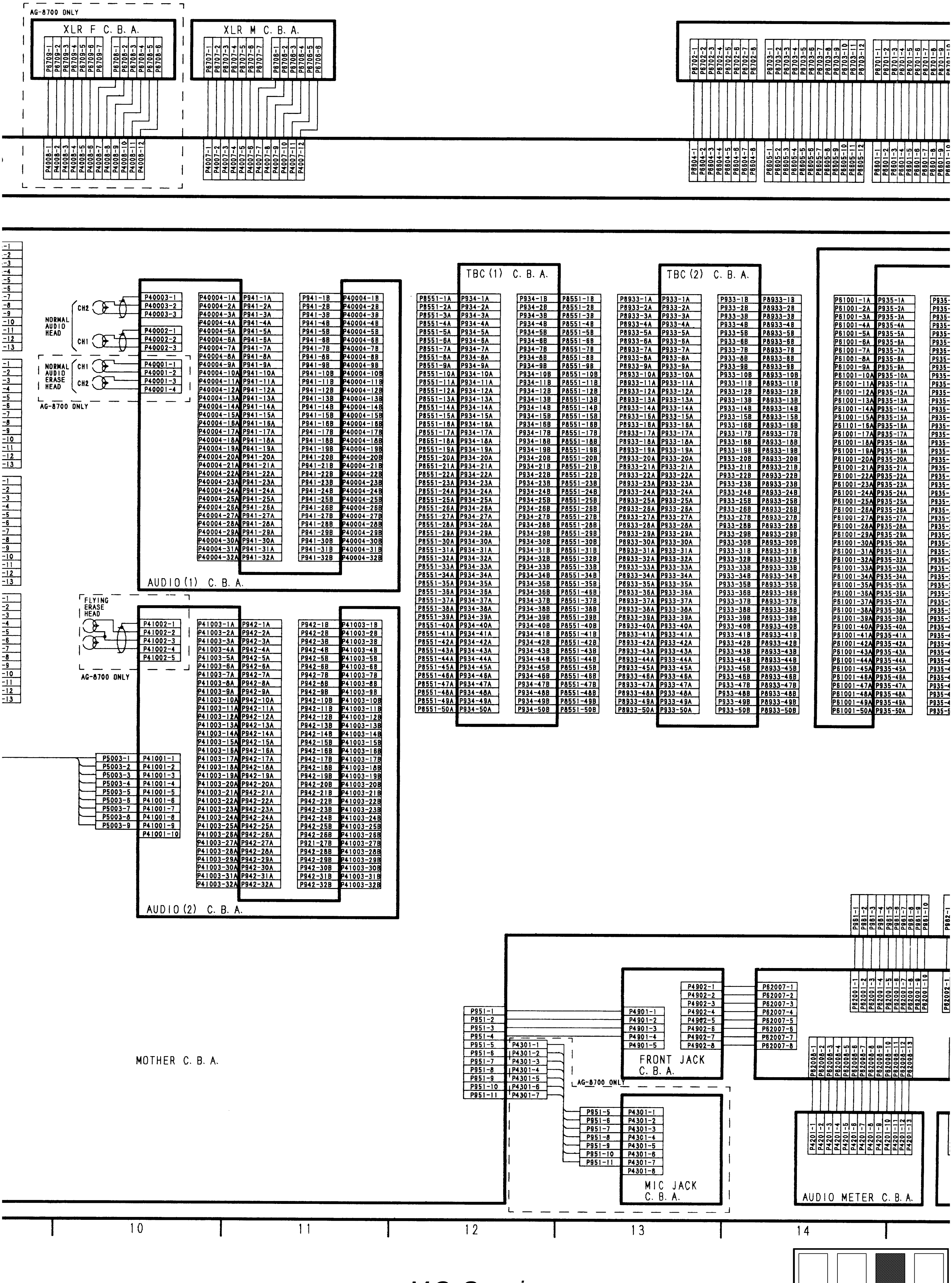
AG-8700 ONLY
XLR F C. B. A.
XLR M C. B. A.
NORMAL AUDIO HEAD
CH2
CH1
NORMAL AUDIO ERASE HEAD
AG-8700 ONLY
AUDIO (1) C. B. A.
FLYING ERASE HEAD
AG-8700 ONLY
AUDIO (2) C. B. A.
TBC (1) C. B. A.
TBC (2) C. B. A.
MOTHER C. B. A.
FRONT JACK C. B. A.
AG-8700 ONLY
MIC JACK C. B. A.
AUDIO METER C. B. A.
10
11
12
13
14

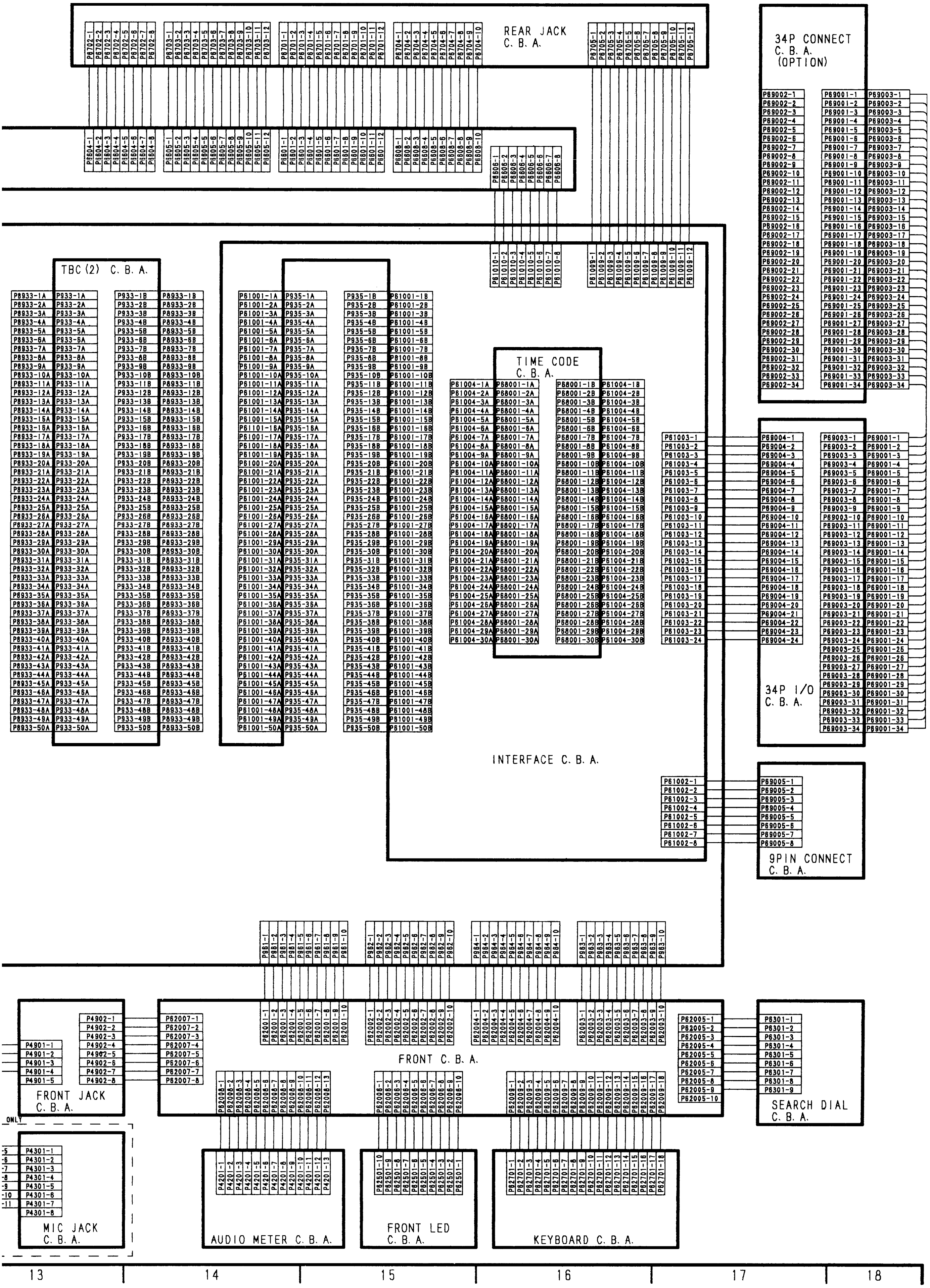
REAR JACK C. B. A.
34P CONNECT C. B. A. (OPTION)
TBC (2) C. B. A.
TIME CODE C. B. A.
INTERFACE C. B. A.
34P I/O C. B. A.
9PIN CONNECT C. B. A.
FRONT JACK C. B. A.
FRONT C. B. A.
SEARCH DIAL C. B. A.
ONLY
MIC JACK C. B. A.
AUDIO METER C. B. A.
FRONT LED C. B. A.
KEYBOARD C. B. A.
13
14
15
16
17
18

NOTES

1 . ● Be sure to make your orders of replacement parts according to this list.
   ● "<R>" in Remark column indicates recommended parts.
   ● "<M>" in Remark column indicates needed in the periodical maintenance.
2 . IMPORTANT SAFETY NOTICE
   Components indentified by "<!>" have special characteristics important for safety.
   When replacing any of these components, use only the original ones.
   Meaning of symbol "<!>" on this parts list is exactly the same as synbol ⚠ on Schematic and Circuit Board Diagrams.
3 . Unless otherwise specified;
   All resistors are in (Ω), K=1,000Ω, M=1,000kΩ.
   All capacitors are in (F), U=10 F, P=10 F.
4 . ITEM NUMBERS WITH CAPITAL LETER E
   Item numbers woth capital leter E (Example: E1, E2, ...) in Ref. no. column mean that the parts are listed with the E item numbers in the exploded views.
5 . The main assembled parts are shown below C.B.A. marked with "■".
6 . When ordering parts, use parts No. only form Part No. column.
7 . Printed circuit board assembly with mark (RTL) is no longer available after discontinuation of the product.
8 . Abbreviations for parts;

NAME	DESCRIPTION
C.CAPACITOR	CERAMIC CAPACITOR
C.CAPACITOR CH	CERAMIC CHIP CAPACITOR
E.CAPACITOR	ELECTROLYTIC CAPACITOR
G.CAPACITOR	GLASS CAPACITOR
M.CAPACITOR	MICA CAPACITOR
P.CAPACITOR	PLASTIC FILM CAPACITOR
S.CAPACITOR	SEMI-CONDUCTOR CAPACITOR
T.CAPACITOR	TANTALUM CAPACITOR
TRIMMER	TRIMMER
C.RESISTOR	CARBON RESISTOR
F.RESISTOR	FUSE RESISTOR
M.RESISTOR	METAL OXSIDE RESISTOR
M.RESISTOR CH	METAL OXSIDE CHIP RESISTOR
S.RESISTOR	SOLID RESISTOR
V.RESISTOR	VARIABLE RESISTOR
W.RESISTOR	WIRE WOUND RESISTOR
COMBI. TR-R	TRANSISTOR-RESISTOR COMBINATION PARTS
COMBI. R-R	RESISTOR-RESISTOR COMBINATION PARTS
COMBI. C-R-L	CAPACITOR-COIL COMBINATION PARTS
C.B.A.	CIRCUIT BOARD ASSEMBLY

SERVICING FIXTURE & TOOLS LIST

Ref. No.		Part No.	Part Name & Description	Pcs	Remarks
		VFM8180HADH	VHS ALIGNMENT TAPE	1	
		VFK0329	POST ADJ. SCREWDRIVER	1	
		VFK0132	BACK TENSION METER	1	(T2-H7-UM)
			(TENTELO METER, MADE IN U.S.A)		
		VFK1012	POST ADJ. PLATE	1	
		VFK0133	DIAL TORQUE GAUGE	1	
		VFK0180	PLASTIC CLAMPER	1	
		VFK0134	ADAPTOR	1	FOR VFK0133
		VFK0190	REEL TABLE HEIGHT GAUGE	1	
		VFK0236	TENSION POST ADJ. FIXTURE	1	
		VFK0806	TENSION SENSOR ADJ. FIXTURE	1	
		VFK0328	H-POSITION ADJ. SCREWDRIVER	1	
		VFK0330	FINE ADJ. SCREWDRIVER (3mm)	1	

Ref. No.		Part No.	Part Name & Description	Pcs	Remarks
		VFK0335	RETAINING RING REMOVER	1	(3mm / 4mm)
		VFK0326	HEX. WRENCH SET	1	
		VFK0948	CHECK LIGHT	1	
		MOR265	MOLYTONE GREASE	1	
		VFK0680	S.C.R. GREASE	1	
		VFK27	HEAD CREANING STICK	1	
		VFK0269	L-TYPE SCREWDRIVER	1	
		VFK66	FAN TYPE TENSION GAUGE	1	
		VFK0941	EXTENDER BOARD 100P	1	
		VFK0829	EXTENDER BOARD 64P	1	
		VFK0942	EXTENDER CODE 13P	1	
		VFK0685	EXTENDER CODE 40P	1	

EXPLODED VIEWS

❶ Chassis Parts Section

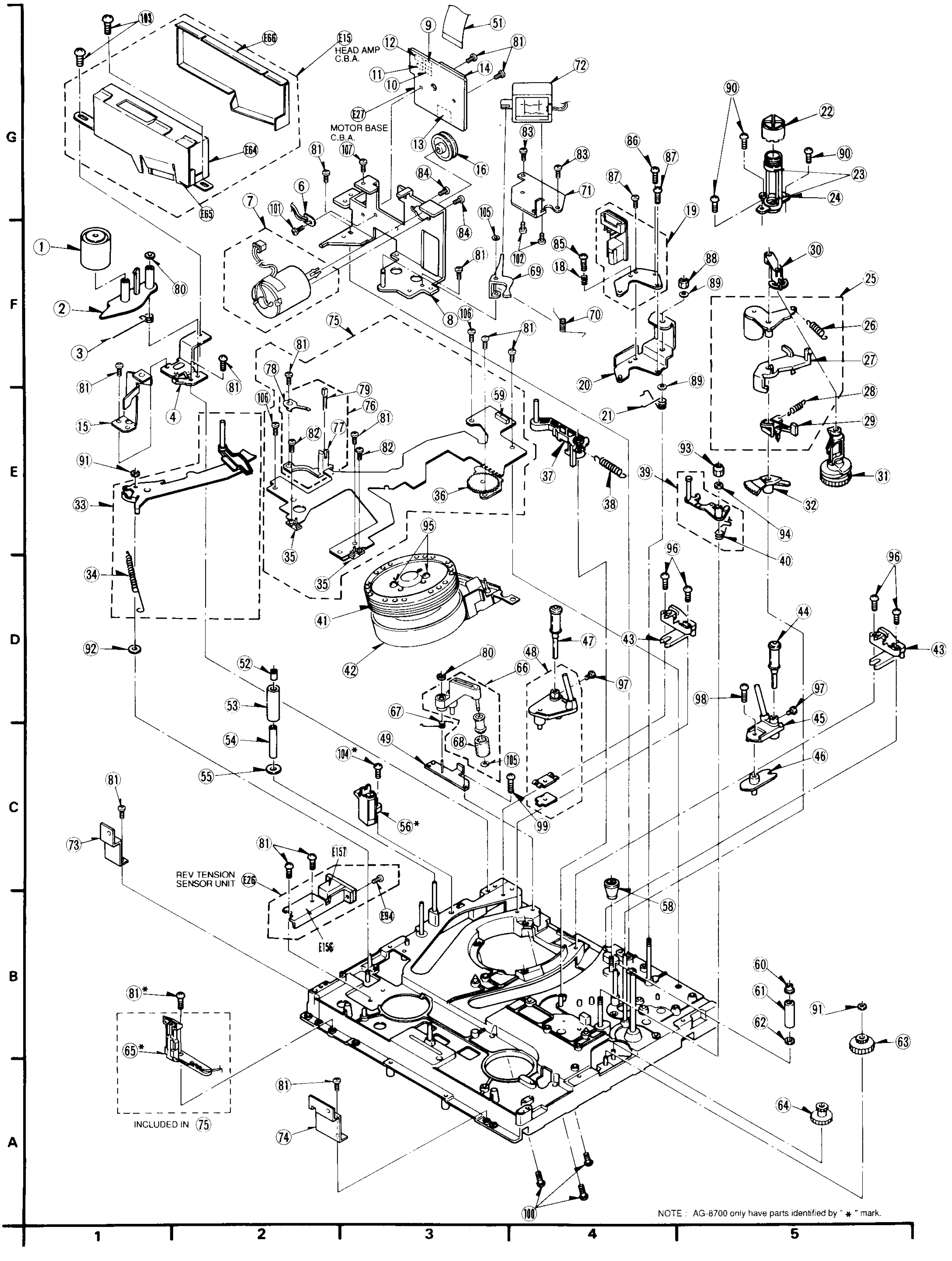

NOTE : AG-8700 only have parts identified by " * " mark.

MECHANICAL REPLACEMENT PARTS LIST

1. Chassis Parts Section

Ref.No.	Part No.	Part Name & Description	Pcs	Remarks
1-1	VXP1075	IMPEDANCE ROLLER UNIT	1	
1-2	VML2293	IMPEDANCE ROLLER ARM	1	
1-3	VMB1976	IMPEDANCE SPRING	1	
1-4	VMA7982	HEAD AMP ANGLE (L)	1	
1-6	VEK3185	HUMIDITY RESISTOR UNIT	1	
1-7	VEM0360	LOADING MOTOR UNIT	1	<!>
1-8	VXA5151	MOTOR BASE (1) UNIT	1	
1-9	VJP1229G	CONNECTOR (2P)	1	
1-10	VJP1229T	CONNECTOR (2P)	1	
1-11	VJP1229R	CONNECTOR (2P)	1	
1-12	VJP1230R	CONNECTOR (3P)	1	
1-13	VJP3106B013	CONNECTOR (13P)	1	
1-14	VJS1493	CONNECTOR (15P)	1	
1-15	VMA8130	IMPEDANCE ROLLER SUPPORT	1	
		ANGLE		
1-16	VDP1319	MOTOR PULLEY	1	
1-18	VMB1251	ADJUST SPRING	1	
1-19	VED0145	A/C HEAD (1) UNIT	1	AG-8700E
1-19	VED0116	A/C HEAD (1) UNIT	1	AG-8600E
1-20	VXA3649	A/C HEAD BASE UNIT	1	
1-21	VMB1567	A/C HEIGHT SPRING	1	
1-22	VXQ0094	THRUST SCREW UNIT	1	
1-23	VMX1567	OIL SEAL	2	
1-24	VXD0120	HOUSING UNIT	1	
1-25	VXL2367	PRESSURE ROLLER UNIT	1	
1-26	VMB1977	PINCH PRESSURE SPRING	1	
1-27	VXL2368	PINCH PRESSURE ARM	1	
1-28	VMB1569	PINCH ARM SPRING	1	
1-29	VML1874	PINCH LIFT ARM	1	
1-30	VMX1353	PINCH CAM ARM	1	
1-31	VDG0577	PINCH CAM	1	
1-32	VDG0651	PINCH SECTOR GEAR	1	
1-33	VXL2089	TENSION ARM UNIT	1	
1-34	VMB1975	TENSION SPRING	1	
1-35	VSP0293	CASSETTE DETECT SW	2	
1-36	VSS0257	MODE SWITCH	1	
1-37	VXL1857	SUB LOADING ARM (1) UNIT	1	
1-38	VMB1566	SUB POST SPRING	1	
1-39	VXL2074	P5 ARM UNIT	1	
1-40	VMB1554	P5 SPRING	1	
1-41	VEH0687	UPPER CYLINDER UNIT	1	AG-8700E
1-41	VEH0719	UPPER CYLINDER UNIT	1	AG-8600E
1-42	VEG1109	LOWER CYLINDER UNIT	1	
1-43	VMD0910	POST STOPPER	2	
1-44	VXP1264	ROLLER POST (1) UNIT	1	
1-45	VXA3213	INCLINED BASE (T)(1) UNIT	1	
1-46	VXA2687	INCLINED ADJUSTMENT PLATE U	1	
1-47	VXP1263	ROLLER POST (S) UNIT	1	
1-48	VXA3249KIT	INCLINED BASE (S)	1	
1-49	VXA3980	HEAD CLEANING PLATE	1	
1-51	VWJ15AW280M0	FLEXIBLE CABLE	1	
1-52	VMX1088	SUPPLY UPPER LIMITER	1	
1-53	VDP1533	SUPPLY ROLLER	1	
1-54	VMX1581	P1 COLLAR	1	
1-55	VMX1533	SUPPLY LOWER LIMITER	1	
1-56	VBS0038	FE HEAD	1	AG-8700E ONLY
1-58	VHN0110	ADJUST NUT	1	
1-59	VJS2964A013	CONNECTOR (15P)	1	
1-60	VMX1544	P4 UPPER LIMITER	1	
1-61	VMX1568	P4 SLEEVE	1	
1-62	VMX1534	P4 LOWER LIMITER	1	
1-63	VDG0664	CONNECTION GEAR	1	
1-64	VDG0483	PINCH SPEED DOWN GEAR	1	
1-65	VES0489	SAFETY SWITCH	1	AG-8700E ONLY
1-66	VXL2263	HEAD CLEANING UNIT	1	
1-67	VMB2532	CLEANING SPRING	1	
1-68	VMT0321	HEAD CLEANING PAD	1	
1-69	VML2845	CAM LEVER	1	
1-70	VMB2672	CAM LEVER SPRING	1	
1-71	VMA8977	SOLENOID BASE	1	
1-72	VSJ0111	PINCH SOLENOID	1	
1-73	VMA6895	MOUNT PLATE (L)	1	
1-74	VMA6896	MOUNT PLATE (R)	1	
1-75	VXA5165	BEND FLEXIBLE UNIT	1	AG-8700E
1-75	VXA5308	BEND FLEXIBLE UNIT	1	AG-8600E
1-76	VXA3520	LED UNIT	1	
1-77	VMD0911	LED HOLDER	1	
1-78	VMB2020	EARTH SPRING	1	
1-79	GL450	LED	1	
1-80	VMX1079	CUT WASHER	2	
1-81	XTV26+6F	SCREW	15	(14):AG-8600E
1-82	XTV2+4F	SCREW	2	
1-83	XYN26+K5	SCREW	2	
1-84	XSN3+3.5	SCREW	2	
1-85	VHD0322	SCREW	1	
1-86	VHD0089B	SCREW	1	
1-87	XSN3D6FZ	SCREW	2	
1-88	VHN0063	M4 NYLON NUT	1	
1-89	XWE4	M4 NYLON WASHER	2	
1-90	VHD0374	SCREW	3	
1-91	VMX0653	CUT WASHER	2	
1-92	XWGV3D6G	POLLY SLIDER WASHER	1	
1-93	VHD0045	M3 NYLON NUT	1	
1-94	XWE3VW	M3 WASHER	1	
1-95	VHD0425	SCREW	2	
1-96	XTV26+10F	SCREW	4	
1-97	VHD0133	SCREW	2	
1-98	XYN26+F6FZ	SCREW	1	
1-99	XTN3+6F	SCREW	1	
1-100	VHD0342	SCREW	3	
1-101	XTV2+6J	SCREW	1	
1-102	XYN26+C4	SCREW	2	
1-103	XTW3+8TR	SCREW	2	
1-104	XTV26+8F	SCREW	1	AG-8700E ONLY
1-105	VMX0653	CUT WASHER	11	
1-106	XTV26+4F	SCREW	2	
1-107	XYE3+EF8R	SCREW	1	

❷ Moving Parts Section

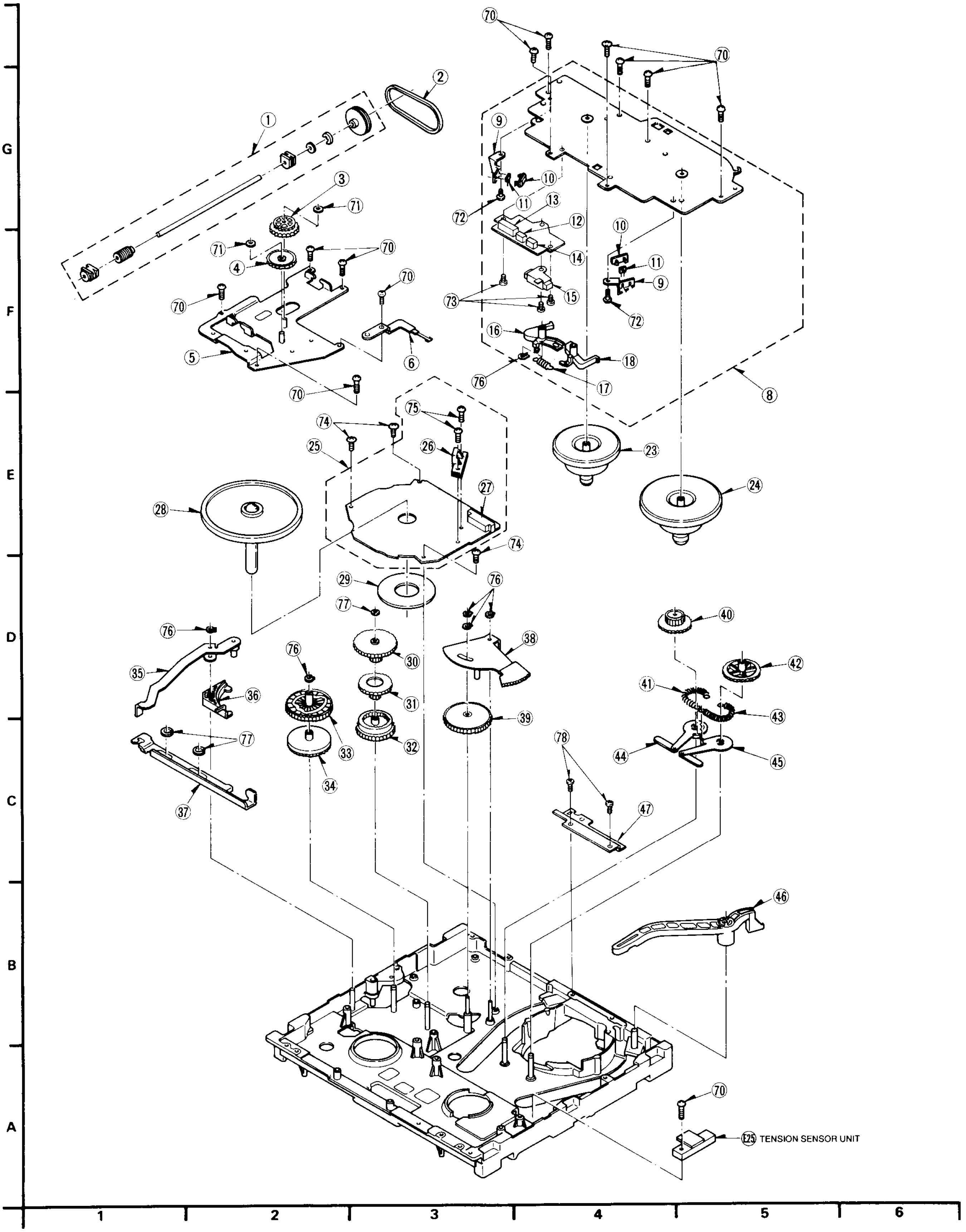

2. Moving Parts Section

Ref.No.		Part No.	Part Name & Description	Pcs	Remarks
2-1		VXP1082	WORM SHAFT UNIT	1	
2-2		VDV0228	LOADING BELT	1	
2-3		VDG0581	WORM WHEEL	1	
2-4		VDG0582	INTERMEDIATE GEAR	1	
2-5		VXA3646	GEAR BASE (1) UNIT	1	
2-6		VXS0098	EARTH SPRING UNIT	1	
2-8		VXA4839	STATOR BASE UNIT	1	
2-9		VMD0611	FG SUPPORT (1)	2	
2-10		VMD0621	FG SUPPORT (2)	2	
2-11		HW-300B	HOLE IC	2	
2-12		VJP1230R	CONNECTOR (3P)	1	
2-13		VJP3202A008Z	CONNECTOR (8P)	1	
2-14		VJP1230T	CONNECTOR (3P)	1	
2-15		VSJ0066	SOLENOID	1	
2-16		VXZ0270	MAIN BRAKE (S) UNIT	1	
2-17		VMB1978	BRAKE SPRING	1	
2-18		VXZ0314	MAIN BLAKE (T) UNIT	1	
2-23		VXR0187	TAKEUP REEL TABLE UNIT	1	
2-24		VXR0225	SUPPLY REEL TABLE UNIT	1	
2-25		VEK6553	STATOR UNIT	1	
2-26		VBK0063	MR HEAD	1	
2-27		VJP1902	CONNECTOR	1	
2-28		VXP1456	ROTOR UNIT	1	<!>
2-29		VMA6847	SUB PLATE	1	
2-30		VDG0580	CENTER GEAR	1	
2-31		VXP0878	RETANER GEAR UNIT	1	
2-32		VDG0342	RING GEAR	1	
2-33		VDG0578	MAIN CAM GEAR	1	
2-34		VDG0343	SUB CAM GEAR	1	
2-35		VXL1895	CAM FOLLOWER ARM UNIT	1	
2-36		VML1861	DETENT ARM	1	
2-37		VMM0218	MAIN ROD	1	
2-38		VXA3144	SECTOR GEAR UNIT	1	
2-39		VDG0579	LOADING CAM GEAR	1	
2-40		VDG0420	LOADING GEAR (T)	1	
2-41		VMB1555	LOADING SPRING (T)	1	
2-42		VDG0593	LOADING GEAR (S)	1	
2-43		VMB1746	LOADING SPRING (S)	1	
2-44		VXL1489	LOADING ARM (T)(1) UNIT	1	
2-45		VXL1487	LOADING ARM (S)(1) UNIT	1	
2-46		VML2304	CLEANING ROD	1	
2-47		VMA8003	MOUNT PLATE (B)	1	
2-70		XTV26+6F	SCREW	12	
2-71		VMX0653	CUT WASHER	2	
2-72		XYN2+F5	SCREW	2	
2-73		XSN26+4	SCREW	3	
2-74		XYEV0004	SCREW	3	
2-75		XYNV0015	SCREW	2	
2-76		XUEV3VW	CAT WASHER	6	
2-77		VMX1079	CUT WASHER	3	
2-78		XTV3+8F	SCREW	2	

3. Cassette Compartment Section

Ref.No.		Part No.	Part Name & Description	Pcs	Remarks
3-1		VXA4504	CASSETTE COMPERTMENT UNIT	1	
3-2		VMA8166	TOP PLATE	1	
3-3		VMD1384	CASSETTE HOLDER CAP	1	
3-4		VMA7992	CASSETTE HOLDER ANGLE	1	
3-6		VMD1387	HOLDER GUIDE (L)	1	
3-7		VXA3691	HOLDER ANGLE UNIT	1	
3-8		VMA7989	CASSETTE HOLDER	1	
3-9		VXA3692	HOLDER GUIDE (R) UNIT	1	
3-10		VML1882	DOOR OPEN LEVER	1	
3-11		VMB1584	DOOR OPEN LEVER SPRING	1	
3-12		VMD1386	HOLDER GUIDE (R)	1	
3-13		VMB2063	RELEASE SPRING	1	
3-14		VML2306	RELEASE LEVER	1	
3-15		VXA3694	SIDE PLATE (L) UNIT	1	
3-16		VML2305	OPENER LEVER	1	
3-17		VXA3693	SIDE PLATE (R) UNIT	1	
3-18		VSS0258	SLIDE SWITCH	1	
3-19		VML2288	DOWN SUPPORT LEVER	1	
3-20		VMB1961	DOWN SUPPORT SPRING	1	
3-22		VXA3696	MAIN RACK UNIT	1	
3-23		VDG0737	DAMPER	1	
3-24		VXA3697	SUB RACK UNIT	1	
3-25		VMB1780	RACK C SPRING	1	
3-26		VMB1997	CLUTCH SPRING	1	
3-28		VMB1999	SUB WIPER SPRING (L)	1	
3-29		VML1878	SUB WIPER ARM (L)	1	
3-30		VML1879	SUB WIPER ARM (R)	1	
3-31		VMB1998	SUB WIPER SPRING (R)	1	
3-32		VXA4500	CASSETTE GUIDE UNIT	1	
3-33		VKF1464	BLINDER PANEL	1	
3-34		VMB1258	BLINDER SPRING	1	
3-35		VDP1398	CASSETTE ROLLER	1	
3-36		VMS5505	ROLLER SHAFT	1	
3-38		VMS4644	SHAFT	1	
3-39		VMD1773	CASSETTE SUPPORT	1	
3-40		VMB2329	SUPPORT SPRING	1	
3-41		VMS3182	MAIN SHAFT	1	
3-42		VML1876	WIPER ARM (L)	1	
3-43		VML1877	WIPER ARM (R)	1	
3-44		VHN0068	STOPPING WASHER	2	
3-50		XTV26+8G	SCREW	2	
3-51		XTV26+6F	SCREW	1	
3-52		XTV3+8G	SCREW	1	
3-53		XUC25FP	E RING	1	

❸ Cassette Compartment Section

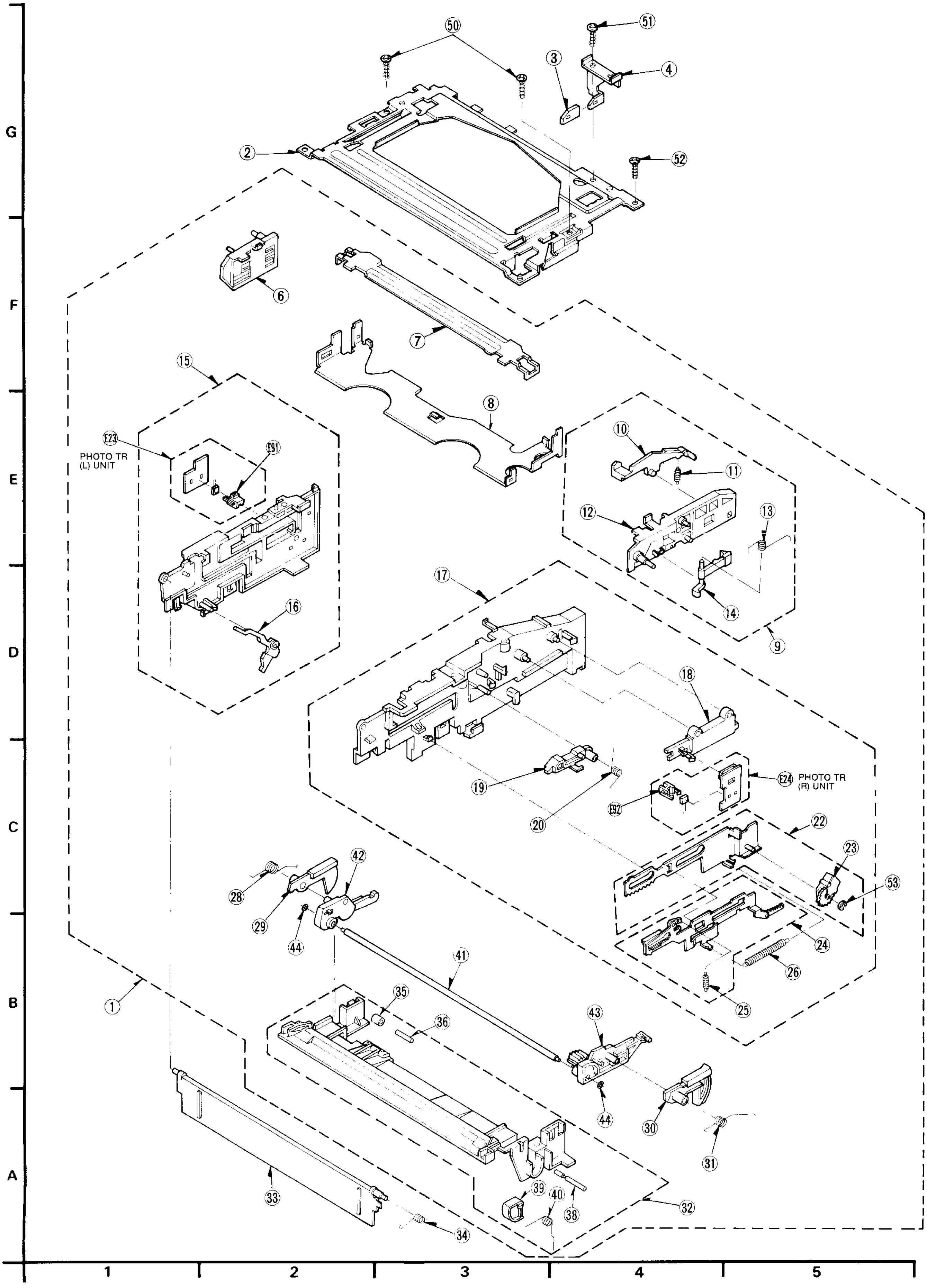

❹ Chassis & Frame Section

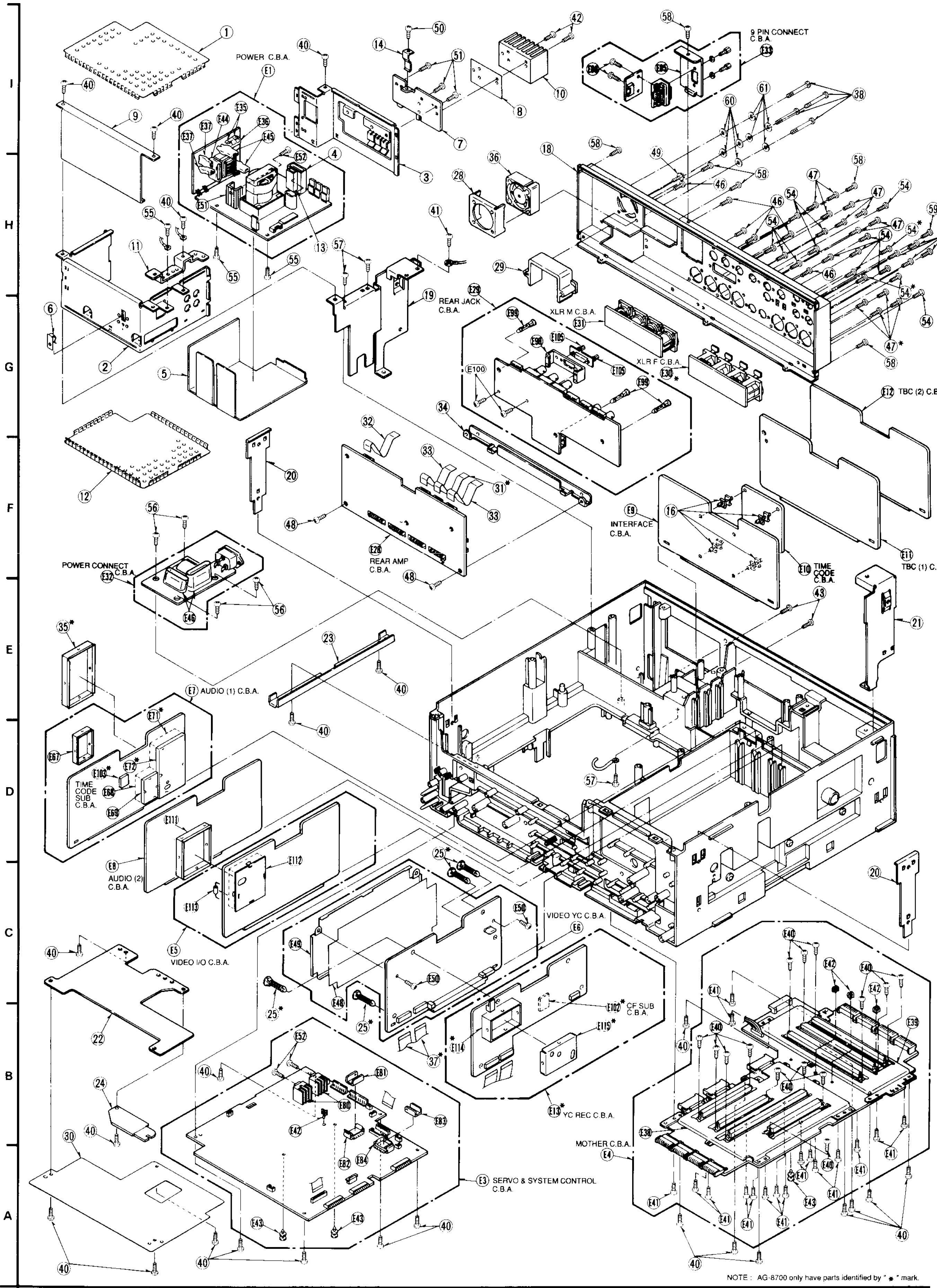

4. Chassis & Frame Section

Ref.No.	Part No.	Part Name & Description	Pcs	Remarks
4-1	VSC3961	POWER UNIT SHIELD CASE (UPPER)	1	
4-2	VSC3963	POWER SHIELD CASE (MIDDLE (A))	1	
4-3	VSC3964	POWER SHIELD CASE (MIDDLE (B))	1	
4-4	VWZ0106	INSULATION TUBE	1	
4-5	VMZ2224	INSULATION SHEET	1	<!>
4-6	VMC0357	TR SPRING	1	
4-7	VSC3965	POWER SHIELD PLATE	1	
4-8	VMT0534	INSULATION SHEET	1	
4-9	VSC4195	POWER SHIELD SHEET	1	
4-10	VSC3966	HEAT SINK	1	
4-11	VMP2669	POWER EARTH ANGLE	1	
4-12	VSC3962	POWER SHIELD CASE (LOWER)	1	
4-13	VMZ2187	INSULATION TUBE	1	<!>
4-14	VMP3083	TR HOLDER	1	
4-16	VJH0632	C.B. HOLDER	4	
4-18	VJH0934	REAR JACK PLATE	1	<!>AG-8700E
4-18	VJH0935	REAR JACK PLATE	1	<!>AG-8600E
4-19	VMP3221	TOP ANGLE (LEFT)	1	<!>
4-20	VXA4649	SIDE ANGLE UNIT	2	
4-21	VMP3222	TOP ANGLE (RIGHT)	1	
4-22	VMP3216	MECHANISM SHIELD PLATE	1	
4-23	VMP3232	POWER CORD SHIELD ANGLE	1	
4-24	VMP3750	SUPPORT ANGLE	1	
4-25	VMX2078	P.C.B. HOLDER	4	AG-8700E ONLY
4-28	VMP4230	FAN MOTOR ANGLE	1	
4-29	VGF0507	AC INLET GUARD	1	
4-30	VSC4186	MECHANISM SHIELD SHEET	1	
4-31	VWJ08AW070M0	FLEXIBLE CABLE	1	
4-32	VWJ10AW070M0	FLEXIBLE CABLE	1	
4-33	VWJ12AW070M0	FLEXIBLE CABLE	2	
4-34	VMP4224	REAR AMP ANGLE	1	
4-35	VSC3970	SHIELD COVER (UPPER)	1	AG-8700E ONLY
4-36	VRF0085	FAN MOTOR	1	
4-37	VWJ18XW040L0	FLEXIBLE CABLE	2	AG-8700E ONLY
4-38	VHD0856	SCREW	4	
4-40	XTV3+10JFR	SCREW	23	
4-41	XYE4+EF6	SCREW	1	
4-42	XYN26+C12FZ	SCREW	2	
4-43	XSB3+10FZ	SCREW	2	
4-43	XSB3+10FZ	SCREW	2	
4-46	XTV3+8GFZ	SCREW	6	(5):AG-8600E
4-47	XSN26+6FZ	SCREW	16	(8):AG-8600E
4-48	XTV3+8FFR	SCREW	2	
4-49	VHD0426	SCREW	1	
4-50	XYN3+C8	SCREW	1	
4-51	XTS3+8F	SCREW	3	
4-54	XTV3+8FFZ	SCREW	15	(12):AG-8600E
4-55	XYE3+EF8FR	SCREW	4	
4-56	XTW3+10TFR	SCREW	4	
4-57	XTV3+10J	SCREW	3	
4-58	XYE3+EF8FZ	SCREW	6	
4-59	XYE3+EF12FZ	SCREW	1	
4-60	XWA35BFZ	WASHER	4	
4-61	XWE35FZ	WASHER	4	

5. Casing Parts Section

Ref.No.	Part No.	Part Name & Description	Pcs	Remarks
5-1	VGM1048	SIDE PANEL (LEFT)	1	
5-2	VGM1047	TOP PANEL	1	
5-3	VMX2248	TOP PANEL SPACER	2	
5-5	VJF0004	MINI CLAMPER	1	
5-6	VMP4225	C.B. HOLDER (1)	1	
5-7	VMP4226	C.B. HOLDER (2)	1	
5-8	VKA0117	RUBBER FOOT	4	
5-9	VXA4551	SUPPORT ANGLE UNIT	2	
5-10	VJF0013	MINI CLAMPER	1	
5-11	VWJ04CN150CA	FLAT CABLE	1	
5-13	VGU6485	OPERATION BUTTON	4	AG-8700E ONLY
5-14	VKC0423	OPERATION BUTTON HOLDER	1	AG-8600E ONLY
5-15	VGF0508	SLIDE KNOB SHEET	9	(8):AG-8600E
5-16	VMP3226	KNOB HOLD ANGLE	1	
5-17	VGU5603	SLIDE KNOB	9	(8):AG-8600E
5-18	VGU6483	COUNTER BUTTON	1	
5-19	VGL0508	REV. PANELIGHT	1	
5-20	VGL0506	FWD PANELIGHT	1	
5-21	VGM1049	SIDE PANEL (RIGHT)	1	
5-22	VMP3225	FRONT SUPPORT ANGLE	1	
5-23	VKW1501	POWER SWITCH COVER	1	
5-24	VGU6482	VR KNOB	4	AG-8700E ONLY
5-25	VKW1839	OPERATION AREA COVER	1	
5-26	VGU4604	JOG DIAL KNOB	1	
5-27	VMC0444	KNOB SPRING	1	
5-28	VMG0476	SEARCH DIAL RUBBER	1	
5-29	VGU4605	SERCH DIAL KNOB	1	
5-30	VKM3678	BOTTOM PLATE	1	
5-31	VES0698	POWER SWITCH UNIT	1	<!>
5-32	VJF0726	C.B. SUPPORT	2	
5-33	VMG0477	VR KNOB CAP	4	AG-8700E ONLY
5-34	VYP6043	FRONT PANEL UNIT	1	AG-8700E
5-34	VYP6044	FRONT PANEL UNIT	1	AG-8600E
5-35	VJF0004	MINI CLAMPER	2	
5-36	VMP3648	EARTH PLATE (LEFT)	1	
5-37	VMP3650	MIC EARTH PLATE	1	
5-38	VMP3649	EARTH PLATE (RIGHT)	1	
5-39	VMC1039	FRONT EARTH SPRING	2	
5-40	VSC4094	SHIELD PLATE	1	
5-41	VMP3282	METER ANGLE	1	
5-42	VMT0509	CONDUCTIVE CUSHION	1	
5-43	VMP4424	EARTH PLATE HOLDER	1	
5-50	VHD0426	SCREW	8	
5-51	VHD0222	SCREW	2	
5-52	XTV3+16G	SCREW	4	
5-53	XTV3+10J	SCREW	7	
5-54	XTV4+8F	SCREW	2	
5-55	XTV4+10JFR	SCREW	5	
5-56	XTV3+8J	SCREW	5	
5-57	VHD0679	SCREW	1	
5-58	VMX1558	STOPPING WASHER	1	
5-59	VHD0059	SCREW	9	
5-60	XWC4BFY	WASHER (M4)	2	
5-61	XTV4+12J	SCREW	1	
5-62	XTV3+8F	SCREW	2	
5-63	XTV26+8FR	SCREW	4	
5-64	XTV3+10JFR	SCREW	16	(14):AG-8600E
5-65	XYN3+8FR	SCREW	4	
5-66	XYE3+EF6	SCREW	3	

❺ Casing Parts Section

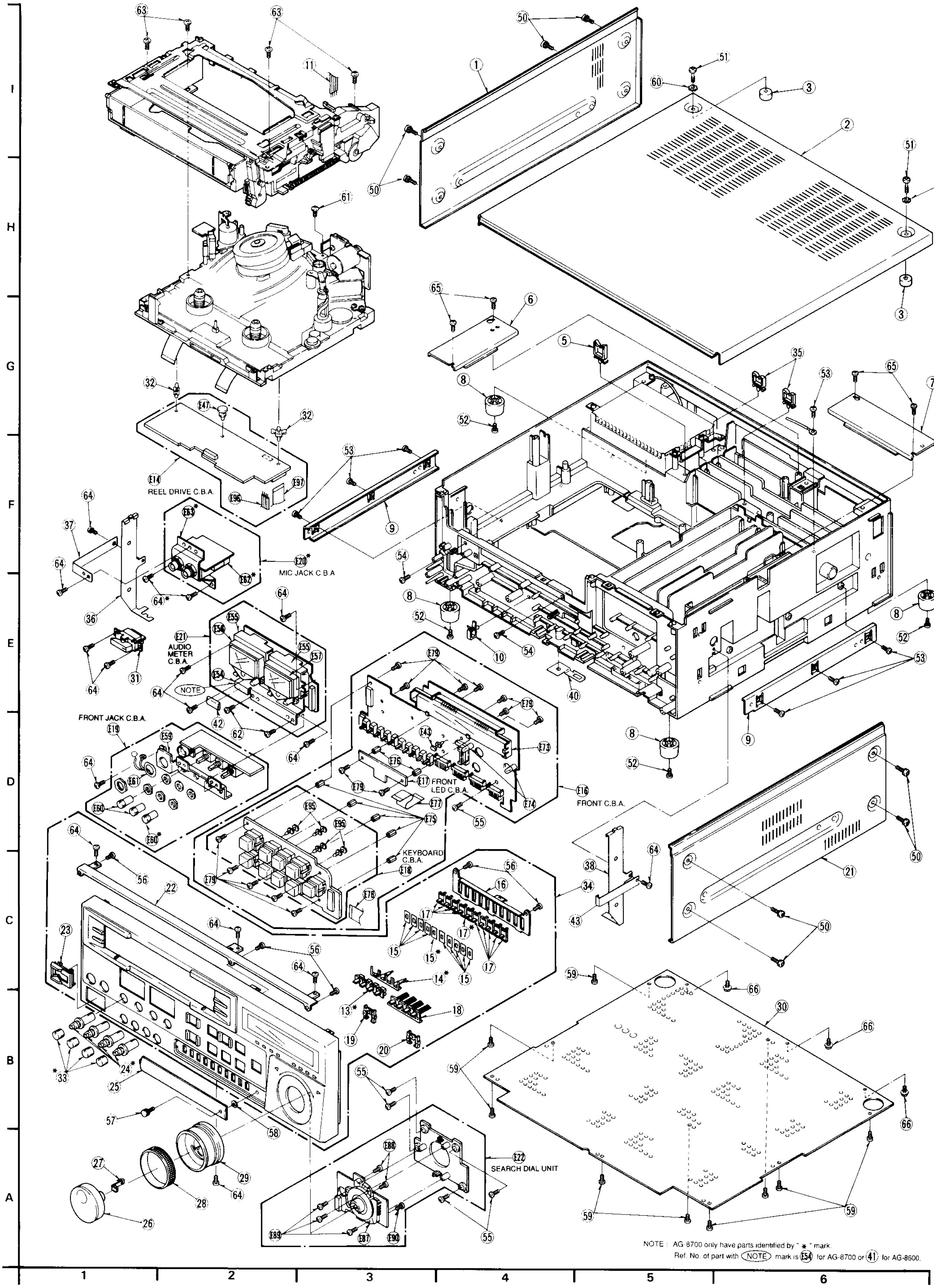

❻ Packing Parts Section

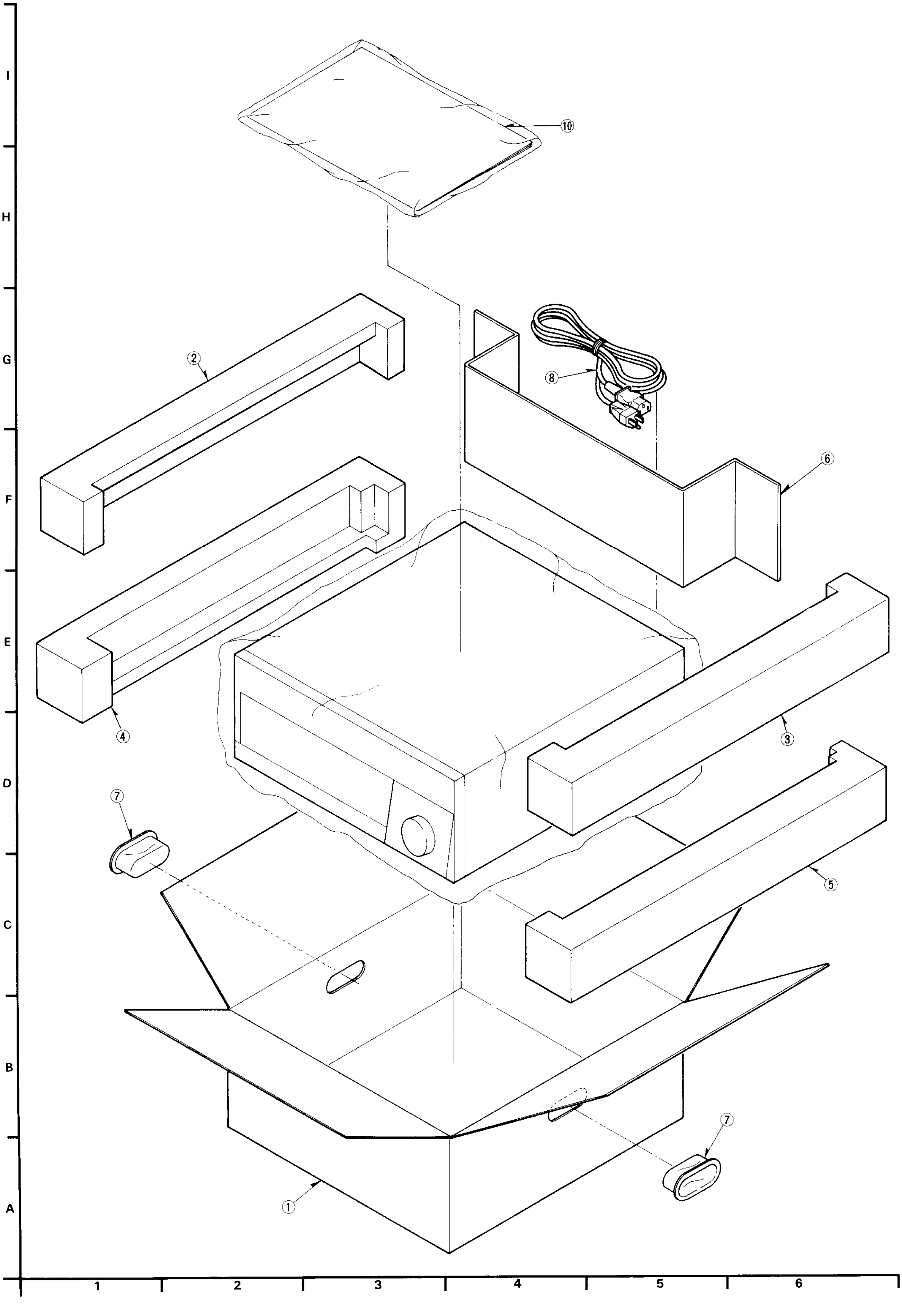

6. Packing Parts Section

Ref.No.		Part No.	Part Name & Description	Pcs	Remarks
6-1		VPG8162	PACKING CASE	1	AG-8700E
6-1		VPG8163	PACKING CASE	1	AG-8600E
6-2		VPN3799	CUSHION (LEFT TOP)	1	
6-3		VPN3801	CUSHION (RIGHT TOP)	1	
6-4		VPN3802	CUSHION (LEFT BOTTOM)	1	
6-5		VPN3803	CUSHION (RIGHT BOTTOM)	1	
6-6		VPN3899	PAD	1	
6-7		VPF0149	HANDLE	1	
6-8		VJA0746	POWER CORD	1	<!>
6-8		VJA0738	POWER CORD	1	<!>
6-10		VQT6265	OPERATING INSTRUCTIONS	1	<!>

Ref.No.		Part No.	Part Name & Description	Pcs	Remarks

ELECTRICAL REPLACEMENT PARTS LIST

Ref.No.		Part No.	Part Name & Description	Pcs	Remarks
E9		VEP06903D	P.C.BOARD W/COMPONENT	1	(RTL)<R>
			INTERFACE		
E10		VEP06913F	P.C.BOARD W/COMPONENT	1	(RTL)<R>
			TIME CODE		AG-8700E
E10		VEP06913G	P.C.BOARD W/COMPONENT	1	(RTL)<R>
			TIME CODE		AG-8600E
E13		VEP03B42B	P.C.BOARD W/COMPONENT	1	(RTL)<R>
			YC REC		AG-8700E
E6		VEP03B44C	P.C.BOARD W/COMPONENT	1	(RTL)<R>
			VIDEO YC		AG-8700E
E6		VEP03B44D	P.C.BOARD W/COMPONENT	1	(RTL)<R>
			VIDEO YC		AG-8600E
E21		VEP04328A	P.C.BOARD W/COMPONENT	1	(RTL)<R>
			AUDIO METER		AG-8700E
E21		VEP04328B	P.C.BOARD W/COMPONENT	1	(RTL)<R>
			AUDIO METER		AG-8600E
E19		VEP04418C	P.C.BOARD W/COMPONENT	1	(RTL)<R>
			FRONT JACK		AG-8700E
E19		VEP04418D	P.C.BOARD W/COMPONENT	1	(RTL)<R>
			FRONT JACK		AG-8600E
E1		VEP01609B	P.C.BOARD W/COMPONENT	1	(RTL)<R>
			POWER		
E4		VEP00V07C	P.C.BOARD W/COMPONENT	1	(RTL)<R>
			MOTHER		AG-8700E
E4		VEP00V07D	P.C.BOARD W/COMPONENT	1	(RTL)<R>
			MOTHER		AG-8600E
E32		VEP01478C	P.C.BOARD W/COMPONENT	1	(RTL)<R>
			POWER CONNECT		
E14		VEP02417B	P.C.BOARD W/COMPONENT	1	(RTL)<R>
			REEL DRIVE		
E5		VEP03B43C	P.C.BOARD W/COMPONENT	1	(RTL)<R>
			VIDEO I/O		AG-8700E
E5		VEP03B43D	P.C.BOARD W/COMPONENT	1	(RTL)<R>
			VIDEO I/O		AG-8600E
E20		VEP04419A	P.C.BOARD W/COMPONENT	1	(RTL)<R>
			MIC JACK		AG-8700E ONLY
E7		VEP04420C	P.C.BOARD W/COMPONENT	1	(RTL)<R>
			AUDIO (1)		AG-8700E
E7		VEP04420D	P.C.BOARD W/COMPONENT	1	(RTL)<R>
			AUDIO (1)		AG-8600E
E8		VEP04421C	P.C.BOARD W/COMPONENT	1	(RTL)<R>
			AUDIO (2)		AG-8700E
E8		VEP04421D	P.C.BOARD W/COMPONENT	1	(RTL)<R>
			AUDIO (2)		AG-8600E
E15		VEP05162N	P.C.BOARD W/COMPONENT	1	(RTL)<R>
			HEAD AMP		AG-8700E
E15		VEP05162P	P.C.BOARD W/COMPONENT	1	(RTL)<R>
			HEAD AMP		AG-8600E
E16		VEP06902H	P.C.BOARD W/COMPONENT	1	(RTL)<R>
			FRONT		AG-8700E

Ref.No.		Part No.	Part Name & Description	Pcs	Remarks
E17		VEP06929A	P.C.BOARD W/COMPONENT	1	(RTL)<R>
			FRONT LED		FOR VEP06902H
E18		VEP06962A	P.C.BOARD W/COMPONENT	1	(RTL)<R>
			KEY BOARD		FOR VEP06902H
E16		VEP06902G	P.C.BOARD W/COMPONENT	1	(RTL)<R>
			FRONT		AG-8600E
E17		VEP06929B	P.C.BOARD W/COMPONENT	1	(RTL)<R>
			FRONT LED		FOR VEP06902G
E18		VEP06962B	P.C.BOARD W/COMPONENT	1	(RTL)<R>
			KEY BOARD		FOR VEP06902G
E3		VEP06904E	P.C.BOARD W/COMPONENT	1	(RTL)<R>
			SERVO & SYSCON		AG-8700E
E3		VEP06904F	P.C.BOARD W/COMPONENT	1	(RTL)<R>
			SERVO & SYSCON		AG-8600E
E12		VEP08160B	P.C.BOARD W/COMPONENT	1	(RTL)<R>
			TBC (2)		
E11		VEP08179A	P.C.BOARD W/COMPONENT	1	(RTL)<R>
			TBC (1)		
E30		VEP04424A	P.C.BOARD W/COMPONENT	1	(RTL)<R>
			XLR M		
E31		VEP04425A	P.C.BOARD W/COMPONENT	1	(RTL)<R>
			XLR F		AG-8700E ONLY
E33		VEP06906A	P.C.BOARD W/COMPONENT	1	(RTL)<R>
			9P CONNECT		
E28		VEP06908E	P.C.BOARD W/COMPONENT	1	(RTL)<R>
			REAR AMP		AG-8700E
E28		VEP06908F	P.C.BOARD W/COMPONENT	1	(RTL)<R>
			REAR AMP		AG-8600E
E29		VEP06909A	P.C.BOARD W/COMPONENT	1	(RTL)<R>
			REAR JACK		AG-8700E
E29		VEP06909B	P.C.BOARD W/COMPONENT	1	(RTL)<R>
			REAR JACK		AG-8600E
E25		VEK2567	P.C.BOARD W/COMPONENT	1	(RTL)<R>
			TENSION SENSOR UNIT		
E26		VEK4265	P.C.BOARD W/COMPONENT	1	(RTL)<R>
			REV TENSION SENSOR UNIT		
E24		VEK4058	P.C.BOARD W/COMPONENT	1	(RTL)<R>
			PHOTO TR. (R) UNIT		
E23		VEK3578	P.C.BOARD W/COMPONENT	1	(RTL)<R>
			PHOTO TR. (L) UNIT		
E27		VEK6633	P.C.BOARD W/COMPONENT	1	(RTL)<R>
			MOTOR BASE		
E22		VEK5556	P.C.BOARD W/COMPONENT	1	(RTL)<R>
			SEARCH DIAL UNIT		

Ref.No.		Part No.	Part Name & Description	Pcs	Remarks
		VEP06903D	P.C.BOARD W/COMPONENT		
			INTERFACE		
C61001		ECUM1H103ZFN	C.CAPACITOR 50V 0.01U	1	
C61002,03		ECUM1H150JCN	C.CAPACITOR CH 50V 15P	2	
C61004		ECEA0JU101	E.CAPACITOR 6.3V 100U	1	
C61005-07		ECUM1H103ZFN	C.CAPACITOR 50V 0.01U	3	
C61008		ECEA0JU471	E.CAPACITOR 6.3V 470U	1	
C61009,10		ECUM1H680JCN	C.CAPACITOR CH 50V 68P	2	
C61011		ECUM1H103ZFN	C.CAPACITOR 50V 0.01U	1	
C61012		ECQB1H104JF	P.CAPACITOR 50V 0.1U	1	
C61013		ECEA1HU3R3	E.CAPACITOR 50V 3.3U	1	
C61014		ECUM1E104ZFN	C.CAPACITOR CH 25V 0.1U	1	
C61015		ECEA0JU101	E.CAPACITOR 6.3V 100U	1	
C61016-21		ECUM1H103ZFN	C.CAPACITOR 50V 0.01U	6	
C61026-29		ECUM1H103ZFN	C.CAPACITOR 50V 0.01U	4	
C61030		ECUM1E104ZFN	C.CAPACITOR CH 25V 0.1U	1	
C61031-34		ECEA0JU470	E.CAPACITOR 6.3V 47U	4	
C61035,36		ECEA1HU010	E.CAPACITOR 50V 1U	2	
C61037-48		ECUM1H103ZFN	C.CAPACITOR 50V 0.01U	12	
C61049-51		ECEA1CU100	E.CAPACITOR 16V 10U	3	
C61052		ECUM1E104ZFN	C.CAPACITOR CH 25V 0.1U	1	
C61053		ECEA1CU100	E.CAPACITOR 16V 10U	1	
C61054		ECUM1H390JCN	C.CAPACITOR CH 50V 39P	1	
D61001-04		11EQS04	DIODE	4	<R>
D61005-12		MA153	DIODE	8	<R>
FL61001		VLF1016A470	FILTER	1	
FL61004		VLF0634	FILTER	1	
IC61001		HD641180XF6	IC	1	<R>
IC61002		VSI1403J	IC	1	<R>
IC61003		X22C12P	IC	1	<R>
IC61004		UPD65012FA19	IC	1	<R>
IC61005		TL7705CPSB	IC	1	<R>
IC61006		MC74HC4538A	IC	1	<R>
IC61007		MC74HC32AF	IC	1	<R>
IC61008		TC7W00F	IC	1	<R>
IC61009		TC7W04F	IC	1	<R>
IC61010		MC74HC14AF	IC	1	<R>
IC61011		MC34051M	IC	1	<R>
IC61013		MC74HC541AF	IC	1	<R>
IC61014		MC74HC245AF	IC	1	<R>
IC61015		MC74HC541AF	IC	1	<R>
IC61016		MC74HC138AF	IC	1	<R>
IC61017		MB89363BPF	IC	1	<R>
IC61018,19		MB86023PF	IC	2	<R>
IC61020-22		MC74HC4053F	IC	3	<R>
IC61023		NJM2233BMA	IC	1	<R>
L61001		VLQEL05S470J	COIL 47UH	1	
L61002		VLQ0067	COIL	1	
L61003,04		VLP0054	COIL	2	
L61006		VLP0017	COIL	1	
L61007-09		VLQEL05S470J	COIL 47UH	3	
P61001		VJP3176B100	CONNECTOR	1	
P61002		VJP3076	CONNECTOR	1	
P61003		VJS3406D024	CONNECTOR	1	
P61004		VJS3505C060	CONNECTOR	1	
P61009		VJP3092	CONNECTOR (MALE)	1	

Ref.No.		Part No.	Part Name & Description	Pcs	Remarks
P61010		VJP3088	CONNECTOR	1	
Q61001		MSB709-R	TRANSISTOR	1	<R>
Q61002,03		MSD601-R	TRANSISTOR	2	<R>
R61001,02		ERJ6GEYJ152	M.RESISTOR CH 1/10W 1.5K	2	
R61003,04		ERJ6GEYJ101	M.RESISTOR CH 1/10W 100	2	
R61005,06		ERJ6GEYJ152	M.RESISTOR CH 1/10W 1.5K	2	
R61007-12		ERJ6GEYJ103	M.RESISTOR CH 1/10W 10K	6	
R61014-30		ERJ6GEYJ103	M.RESISTOR CH 1/10W 10K	17	
R61032,33		ERJ6GEYJ103	M.RESISTOR CH 1/10W 10K	2	
R61034		ERJ6GEYJ102	M.RESISTOR CH 1/10W 1K	1	
R61035		ERJ6GEYG472	M.RESISTOR CH 1/10W 4.7K	1	
R61036,37		ERJ6GEYJ473	M.RESISTOR CH 1/10W 47K	2	
R61038-47		ERJ6GEYJ103	M.RESISTOR CH 1/10W 10K	10	
R61048,49		ERJ6GEYJ473	M.RESISTOR CH 1/10W 47K	2	
R61050		ERJ6GEYJ103	M.RESISTOR CH 1/10W 10K	1	
R61051-55		ERJ6GEYJ473	M.RESISTOR CH 1/10W 47K	5	
R61056-63		ERJ6GEYJ103	M.RESISTOR CH 1/10W 10K	8	
R61064		ERJ6GEYJ473	M.RESISTOR CH 1/10W 47K	1	
R61065		ERJ6GEYJ103	M.RESISTOR CH 1/10W 10K	1	
R61066-92		ERJ6GEYJ101	M.RESISTOR CH 1/10W 100	27	
R61094-13		ERJ6GEYJ101	M.RESISTOR CH 1/10W 100	20	
R61114-21		ERJ6GEYJ103	M.RESISTOR CH 1/10W 10K	8	
R61122-25		ERJ6GEYJ101	M.RESISTOR CH 1/10W 100	4	
R61127-37		ERJ6GEYJ101	M.RESISTOR CH 1/10W 100	11	
R61140-58		ERJ6GEYJ101	M.RESISTOR CH 1/10W 100	19	
R61160-79		ERJ6GEYJ331	M.RESISTOR CH 1/10W 330	20	
R61180-82		ERJ6GEYJ101	M.RESISTOR CH 1/10W 100	3	
R61184		ERJ6GEYJ273	M.RESISTOR CH 1/10W 27K	1	
R61185		ERJ6GEYJ102	M.RESISTOR CH 1/10W 1K	1	
R61186		ERJ6GEYJ223	M.RESISTOR CH 1/10W 22K	1	
R61187		ERJ6GEYJ273	M.RESISTOR CH 1/10W 27K	1	
R61188		ERJ6GEYJ330	M.RESISTOR CH 1/10W 33	1	
R61189		ERJ6GEYJ102	M.RESISTOR CH 1/10W 1K	1	
R61190		ERJ6GEYJ152	M.RESISTOR CH 1/10W 1.5K	1	
R61191		ERJ6GEYJ223	M.RESISTOR CH 1/10W 22K	1	
R61193-97		ERJ6GEY0R00	M.RESISTOR CH 1/10W 0	5	
R61198		ERJ6GEYJ223	M.RESISTOR CH 1/10W 22K	1	
X61001		VSX0373	CRYSTAL OSCILLATOR	1	<R>
			MISCELLANEOUS		
E116		VJS2336A028	IC SOCKET	1	

Ref.No.	Part No.	Part Name & Description	Pcs	Remarks
	VEP06913F	P.C.BOARD W/COMPONENT		AG-8700E
		TIME CODE		
C68001,02	ECUM1H103ZFN	C.CAPACITOR 50V 0.01U	2	
C68003	ECEV1HVR22Q	E.CAPACITOR 50V 0.22U	1	
C68004,05	ECUM1H220JCN	C.CAPACITOR CH 50V 22P	2	
C68006-09	ECUM1H103ZFN	C.CAPACITOR 50V 0.01U	4	
C68010,11	ECUM1H150JCN	C.CAPACITOR CH 50V 15P	2	
C68012-16	ECUM1H103ZFN	C.CAPACITOR 50V 0.01U	5	
C68017	ECUM1H220JCN	C.CAPACITOR CH 50V 22P	1	
C68018	ECUM1H270JCN	C.CAPACITOR CH 50V 27P	1	
C68019	ECUM1H560JCN	C.CAPACITOR CH 50V 56P	1	
C68020	ECEV1CV100Q	E.CAPACITOR 16V 10U	1	
C68021-27	ECUM1H103ZFN	C.CAPACITOR 50V 0.01U	7	
C68028	ECUM1E104ZFN	C.CAPACITOR CH 25V 0.1U	1	
C68029,30	ECUM1H103ZFN	C.CAPACITOR 50V 0.01U	2	
C68031	ECUM1H050CCN	C.CAPACITOR CH 50V 5P	1	
C68032	ECUM1H560JCN	C.CAPACITOR CH 50V 56P	1	
C68033	ECUM1H060DCN	C.CAPACITOR CH 50V 6P	1	
C68034	ECUM1H103ZFN	C.CAPACITOR 50V 0.01U	1	
C68035	ECUM1E104ZFN	C.CAPACITOR CH 25V 0.1U	1	
C68036	ECEV1HV2R2Q	E.CAPACITOR 50V 2.2U	1	
C68037	ECEV1CV100Q	E.CAPACITOR 16V 10U	1	
C68038,39	ECUM1H103ZFN	C.CAPACITOR 50V 0.01U	2	
C68040	ECUM1H102JCN	C.CAPACITOR CH 50V 1000P	1	
C68041	ECUM1H103ZFN	C.CAPACITOR 50V 0.01U	1	
C68042	ECUM1H102JCN	C.CAPACITOR CH 50V 1000P	1	
C68043	ECHU1C102JA	P.CAPACITOR 16V 1000P	1	
C68044	ECUM1H103ZFN	C.CAPACITOR 50V 0.01U	1	
C68045	ECUM1H151JCN	C.CAPACITOR CH 50V 150P	1	
C68046	ECEV1CV100Q	E.CAPACITOR 16V 10U	1	
C68047	ECUM1E104ZFN	C.CAPACITOR CH 25V 0.1U	1	
C68048	ECUM1H102JCN	C.CAPACITOR CH 50V 1000P	1	
D68001-05	MA151K	DIODE	5	<R>
IC68001	UPD78220GJ	IC	1	<R>
IC68002	MN51040VPI	IC	1	<R>
IC68003	MB8421-90LPF	IC	1	<R>
IC68004	51951AML600D	IC	1	<R>
IC68005,06	MC74HC32AF	IC	2	<R>
IC68007	MC74HC04AF	IC	1	<R>
IC68008	MC74HC32AF	IC	1	<R>
IC68009	MC74HC373AF	IC	1	<R>
IC68011	MC74HC4053F	IC	1	<R>
IC68012	AN1319S	IC	1	<R>
IC68013,14	MC74HC4053F	IC	2	<R>
IC68015	TC74HC221AF	IC	1	<R>
IC68016	AN6912S	IC	1	<R>
IC68017	UPD65005X436	IC	1	<R>
IF68010	VJF1046	IC SOCKET COVER	1	
IS68010	VJS3427X028	CONNECTOR	1	
IS68010	VSI1404C	IC SOCKET	1	
L68001	VLQ0319K221	COIL 220UH	1	
P68001	VJP3507C060	CONNECTOR	1	

Ref.No.	Part No.	Part Name & Description	Pcs	Remarks
Q68001	MSB709-R	TRANSISTOR	1	<R>
R68001-03	ERJ6GEYJ473	M.RESISTOR CH 1/10W 47K	3	
R68004	ERJ6GEYJ105	M.RESISTOR CH 1/10W 1M	1	
R68005,06	ERJ6GEYJ103	M.RESISTOR CH 1/10W 10K	2	
R68007	ERJ6GEYJ222	M.RESISTOR CH 1/10W 2.2K	1	
R68008	ERJ6GEYJ103	M.RESISTOR CH 1/10W 10K	1	
R68009	ERJ6GEYJ122	M.RESISTOR CH 1/10W 1.2K	1	
R68010	ERJ6GEYJ562	M.RESISTOR CH 1/10W 5.6K	1	
R68011,12	ERJ6GEYJ223	M.RESISTOR CH 1/10W 22K	2	
R68013	ERJ6GEYJ562	M.RESISTOR CH 1/10W 5.6K	1	
R68014	ERJ6GEYJ224	M.RESISTOR CH 1/10W 220K	1	
R68015,16	ERJ6GEYJ272	M.RESISTOR CH 1/10W 2.7K	2	
R68017	ERJ6GEYJ102	M.RESISTOR CH 1/10W 1K	1	
R68018	ERJ6GEYJ104	M.RESISTOR CH 1/10W 100K	1	
R68019	ERJ6GEYJ332	M.RESISTOR CH 1/10W 3.3K	1	
R68020	ERJ6GEYJ152	M.RESISTOR CH 1/10W 1.5K	1	
R68021	ERJ6GEYJ394	M.RESISTOR CH 1/10W 390K	1	
R68022	ERJ6GEYG132	M.RESISTOR CH 1/10W 1.3K	1	
R68023	ERJ6GEYJ122	M.RESISTOR CH 1/10W 1.2K	1	
R68024,25	ERJ6GEYJ104	M.RESISTOR CH 1/10W 100K	2	
R68026	ERJ6GEYJ562	M.RESISTOR CH 1/10W 5.6K	1	
R68027	ERJ6GEYJ103	M.RESISTOR CH 1/10W 10K	1	
R68028	ERJ6GEYJ123	M.RESISTOR CH 1/10W 12K	1	
R68029	ERJ6GEYJ103	M.RESISTOR CH 1/10W 10K	1	
R68030	ERJ6GEYJ223	M.RESISTOR CH 1/10W 22K	1	
R68031	ERJ6GEYJ123	M.RESISTOR CH 1/10W 12K	1	
R68032	VRE0034E202	M.RESISTOR CH 1/10W 2K	1	
R68033	VRE0034E103	M.RESISTOR CH 1/10W 10K	1	
R68034	VRE0034E183	M.RESISTOR CH 1/10W 18K	1	
R68035	ERJ6GEYJ103	M.RESISTOR CH 1/10W 10K	1	
R68037	ERJ6GEYJ103	M.RESISTOR CH 1/10W 10K	1	
R68038	ERJ6GEYJ473	M.RESISTOR CH 1/10W 47K	1	
R68039	ERJ6GEYG103	M.RESISTOR CH 1/10W 10K	1	
R68040	ERJ6GEYG331	M.RESISTOR CH 1/10W 330	1	
R68041	ERJ6GEYJ224	M.RESISTOR CH 1/10W 220K	1	
R68042,43	ERJ6GEYJ102	M.RESISTOR CH 1/10W 1K	2	
R68044	ERJ6GEYJ223	M.RESISTOR CH 1/10W 22K	1	
R68045	ERJ6GEYJ103	M.RESISTOR CH 1/10W 10K	1	
R68046,47	ERJ6GEYJ123	M.RESISTOR CH 1/10W 12K	2	
R68048	ERJ6GEYJ105	M.RESISTOR CH 1/10W 1M	1	
R68049	ERJ6GEYJ393	M.RESISTOR CH 1/10W 39K	1	
R68050	ERJ6GEYJ473	M.RESISTOR CH 1/10W 47K	1	
SW68001	VSS0342	SWITCH	1	<R>
VR68001	VRV0161B203	V.RESISTOR	1	
X68001	VSX0499	CRYSTAL OSCILLATOR	1	<R>
X68002	VSX0498	CRYSTAL OSCILLATOR	1	<R>
X68003	VSX0615	CRYSTAL OSCILLATOR	1	<R>

Ref.No.		Part No.	Part Name & Description	Pcs	Remarks
		VEP06913G	P.C.BOARD W/COMPONENT		AG-8600E
			TIME CODE		
C68001,02		ECUM1H103ZFN	C.CAPACITOR 50V 0.01U	2	
C68003		ECEV1HVR22Q	E.CAPACITOR 50V 0.22U	1	
C68004,05		ECUM1H220JCN	C.CAPACITOR CH 50V 22P	2	
C68006-09		ECUM1H103ZFN	C.CAPACITOR 50V 0.01U	4	
C68010,11		ECUM1H150JCN	C.CAPACITOR CH 50V 15P	2	
C68012-16		ECUM1H103ZFN	C.CAPACITOR 50V 0.01U	5	
C68017		ECUM1H220JCN	C.CAPACITOR CH 50V 22P	1	
C68018		ECUM1H270JCN	C.CAPACITOR CH 50V 27P	1	
C68019		ECUM1H560JCN	C.CAPACITOR CH 50V 56P	1	
C68020		ECEV1CV100Q	E.CAPACITOR 16V 10U	1	
C68021-27		ECUM1H103ZFN	C.CAPACITOR 50V 0.01U	7	
C68028		ECUM1E104ZFN	C.CAPACITOR CH 25V 0.1U	1	
C68029,30		ECUM1H103ZFN	C.CAPACITOR 50V 0.01U	2	
C68034		ECUM1H103ZFN	C.CAPACITOR 50V 0.01U	1	
C68035		ECUM1E104ZFN	C.CAPACITOR CH 25V 0.1U	1	
C68037		ECEV1CV100Q	E.CAPACITOR 16V 10U	1	
C68038,39		ECUM1H103ZFN	C.CAPACITOR 50V 0.01U	2	
C68040		ECUM1H102JCN	C.CAPACITOR CH 50V 1000P	1	
C68046		ECEV1CV100Q	E.CAPACITOR 16V 10U	1	
C68047		ECUM1E104ZFN	C.CAPACITOR CH 25V 0.1U	1	
C68048		ECUM1H102JCN	C.CAPACITOR CH 50V 1000P	1	
D68001,02		MA151K	DIODE	2	<R>
D68004,05		MA151K	DIODE	2	<R>
IC68001		UPD78220GJ	IC	1	<R>
IC68002		MN51040VPI	IC	1	<R>
IC68003		MB8421-90LPF	IC	1	<R>
IC68004		51951AML600D	IC	1	<R>
IC68005,06		MC74HC32AF	IC	2	<R>
IC68007		MC74HC04AF	IC	1	<R>
IC68008		MC74HC32AF	IC	1	<R>
IC68009		MC74HC373AF	IC	1	<R>
IC68011		MC74HC4053F	IC	1	<R>
IC68012		AN1319S	IC	1	<R>
IC68013,14		MC74HC4053F	IC	2	<R>
IC68016		AN6912S	IC	1	<R>
IF68010		VJF1046	IC SOCKET COVER	1	
IS68010		VJS3427X028	IC SOCKET	1	
IS68010		VSI1404C	IC SOCKET	1	
P68001		VJP3507C060	CONNECTOR	1	
R68001-03		ERJ6GEYJ473	M.RESISTOR CH 1/10W 47K	3	
R68004		ERJ6GEYJ105	M.RESISTOR CH 1/10W 1M	1	
R68005,06		ERJ6GEYJ103	M.RESISTOR CH 1/10W 10K	2	
R68007		ERJ6GEYJ222	M.RESISTOR CH 1/10W 2.2K	1	
R68008		ERJ6GEYJ103	M.RESISTOR CH 1/10W 10K	1	
R68009		ERJ6GEYJ122	M.RESISTOR CH 1/10W 1.2K	1	
R68010		ERJ6GEYJ562	M.RESISTOR CH 1/10W 5.6K	1	
R68011,12		ERJ6GEYJ223	M.RESISTOR CH 1/10W 22K	2	
R68013		ERJ6GEYJ562	M.RESISTOR CH 1/10W 5.6K	1	
R68014		ERJ6GEYJ224	M.RESISTOR CH 1/10W 220K	1	
R68018		ERJ6GEYJ104	M.RESISTOR CH 1/10W 100K	1	
R68019		ERJ6GEYJ332	M.RESISTOR CH 1/10W 3.3K	1	

Ref.No.		Part No.	Part Name & Description	Pcs	Remarks
R68020		ERJ6GEYJ152	M.RESISTOR CH 1/10W 1.5K	1	
R68021		ERJ6GEYJ394	M.RESISTOR CH 1/10W 390K	1	
R68022		ERJ6GEYG132	M.RESISTOR CH 1/10W 1.3K	1	
R68023		ERJ6GEYJ122	M.RESISTOR CH 1/10W 1.2K	1	
R68024,25		ERJ6GEYJ104	M.RESISTOR CH 1/10W 100K	2	
R68026		ERJ6GEYJ562	M.RESISTOR CH 1/10W 5.6K	1	
R68027		ERJ6GEYJ103	M.RESISTOR CH 1/10W 10K	1	
R68028		ERJ6GEYJ123	M.RESISTOR CH 1/10W 12K	1	
R68029		ERJ6GEYJ103	M.RESISTOR CH 1/10W 10K	1	
R68030		ERJ6GEYJ223	M.RESISTOR CH 1/10W 22K	1	
R68031		ERJ6GEYJ123	M.RESISTOR CH 1/10W 12K	1	
R68038		ERJ6GEYJ473	M.RESISTOR CH 1/10W 47K	1	
R68039		ERJ6GEYG103	M.RESISTOR CH 1/10W 10K	1	
R68040		ERJ6GEYG331	M.RESISTOR CH 1/10W 330	1	
R68041		ERJ6GEYJ224	M.RESISTOR CH 1/10W 220K	1	
R68042,43		ERJ6GEYJ102	M.RESISTOR CH 1/10W 1K	2	
R68044		ERJ6GEYJ223	M.RESISTOR CH 1/10W 22K	1	
R68045		ERJ6GEYJ103	M.RESISTOR CH 1/10W 10K	1	
R68046,47		ERJ6GEYJ123	M.RESISTOR CH 1/10W 12K	2	
R68048		ERJ6GEYJ105	M.RESISTOR CH 1/10W 1M	1	
R68050		ERJ6GEYJ473	M.RESISTOR CH 1/10W 47K	1	
X68001		VSX0499	CRYSTAL OSCILLATOR	1	<R>
X68002		VSX0498	CRYSTAL OSCILLATOR	1	<R>
X68003		VSX0615	CRYSTAL OSCILLATOR	1	<R>

MC-Service

Ref.No.		Part No.	Part Name & Description	Pcs	Remarks
		VEP03B42B	P.C.BOARD W/COMPONENT		AG-8700E
			YC REC		
C9001		ECUM1H180JCN	C.CAPACITOR CH 50V 18P	1	
C9002		ECUM1H332KBN	C.CAPACITOR CH 50V 3300P	1	
C9003		ECUM1H070DCN	C.CAPACITOR CH 50V 7P	1	
C9004		ECUM1H820JCN	C.CAPACITOR CH 50V 82P	1	
C9005		ECUM1H121JCN	C.CAPACITOR CH 50V 120P	1	
C9006		ECEV0JV220Q	E.CAPACITOR 6.3V 22U	1	
C9007		ECEV1HV010Q	E.CAPACITOR 50V 1U	1	
C9008,09		ECEV1HV3R3Q	E.CAPACITOR 50V 3.3U	2	
C9010-12		ECEV0JV470Q	E.CAPACITOR 6.3V 47U	3	
C9013		ECUM1H101JCN	C.CAPACITOR CH 50V 100P	1	
C9014,15		ECUM1E104ZFN	C.CAPACITOR CH 25V 0.1U	2	
C9016		ECEV0JV470Q	E.CAPACITOR 6.3V 47U	1	
C9031		ECUM1C105ZFN	C.CAPACITOR CH 16V 1U	1	
C9032		ECUM1H102JCN	C.CAPACITOR CH 50V 1000P	1	
C9033		ECUM1E104KBN	C.CAPACITOR CH 25V 0.1U	1	
C9034		ECUM1H470JCN	C.CAPACITOR CH 50V 47P	1	
C9057		ECUM1H103KBN	C.CAPACITOR CH 50V 0.01U	1	
C9092,93		ECUM1H103KBN	C.CAPACITOR CH 50V 0.01U	2	
C9094		ECUM1H562KBN	C.CAPACITOR CH 50V 5600P	1	
C9095		ECUM1H103KBN	C.CAPACITOR CH 50V 0.01U	1	
C9096		ECUM1E104KBN	C.CAPACITOR CH 25V 0.1U	1	
C9098,99		ECUM1E104ZFN	C.CAPACITOR CH 25V 0.1U	2	
C9101		ECUM1H180JCN	C.CAPACITOR CH 50V 18P	1	
C9102		ECUM1H103KBN	C.CAPACITOR CH 50V 0.01U	1	
C9103		ECUM1H070DCN	C.CAPACITOR CH 50V 7P	1	
C9104		ECUM1H820JCN	C.CAPACITOR CH 50V 82P	1	
C9106		ECEV1CV100Q	E.CAPACITOR 16V 10U	1	
C9107		ECEV1HV010Q	E.CAPACITOR 50V 1U	1	
C9108,09		ECEV1HV3R3Q	E.CAPACITOR 50V 3.3U	2	
C9110		ECUM1H121JCN	C.CAPACITOR CH 50V 120P	1	
C9111,12		ECEV0JV470Q	E.CAPACITOR 6.3V 47U	2	
C9113		ECUM1H471JCN	C.CAPACITOR CH 50V 470P	1	
C9114		ECUM1E104ZFN	C.CAPACITOR CH 25V 0.1U	1	
C9115		ECUM1H103ZFN	C.CAPACITOR 50V 0.01U	1	
C9116		ECEV1CV100Q	E.CAPACITOR 16V 10U	1	
C9119		ECUM1E104ZFN	C.CAPACITOR CH 25V 0.1U	1	
C9120		ECEV0JV470Q	E.CAPACITOR 6.3V 47U	1	
C9122		ECUM1C105ZFN	C.CAPACITOR CH 16V 1U	1	
C9123		ECEV0GV101Q	E.CAPACITOR 4V 100U	1	
C9124		ECUM1H330JCN	C.CAPACITOR CH 50V 33P	1	
C9126		ECUM1H330JCN	C.CAPACITOR CH 50V 33P	1	
C9128		ECUM1H560JCN	C.CAPACITOR CH 50V 56P	1	
C9131		ECUM1C105ZFN	C.CAPACITOR CH 16V 1U	1	
C9133		ECUM1H101JCN	C.CAPACITOR CH 50V 100P	1	
C9134		ECUM1H560JCN	C.CAPACITOR CH 50V 56P	1	
C9135		ECUM1H120JCN	C.CAPACITOR CH 50V 12P	1	
C9136,37		ECUM1E104ZFN	C.CAPACITOR CH 25V 0.1U	2	
C9138		ECUM1H470JCN	C.CAPACITOR CH 50V 47P	1	
C9152		ECUM1E104ZFN	C.CAPACITOR CH 25V 0.1U	1	
C9185		ECUM1H103KBN	C.CAPACITOR CH 50V 0.01U	1	
C9189		ECEV0JV470Q	E.CAPACITOR 6.3V 47U	1	
C9193		ECUM1H103KBN	C.CAPACITOR CH 50V 0.01U	1	
C9194		ECUM1H562KBN	C.CAPACITOR CH 50V 5600P	1	
C9195		ECUM1H103KBN	C.CAPACITOR CH 50V 0.01U	1	
C9196		ECUM1E104KBN	C.CAPACITOR CH 25V 0.1U	1	
C9198,99		ECUM1E104ZFN	C.CAPACITOR CH 25V 0.1U	2	
C9201		ECUM1H101JCN	C.CAPACITOR CH 50V 100P	1	
C9202		ECUM1H332KBN	C.CAPACITOR CH 50V 3300P	1	
C9203		ECEV0JV470Q	E.CAPACITOR 6.3V 47U	1	
C9204		ECUM1H103KBN	C.CAPACITOR CH 50V 0.01U	1	
C9205		ECUM1H103ZFN	C.CAPACITOR 50V 0.01U	1	
C9208-10		ECEV0JV470Q	E.CAPACITOR 6.3V 47U	3	
C9212		ECUM1H103KBN	C.CAPACITOR CH 50V 0.01U	1	
C9213		ECUM1H101JCN	C.CAPACITOR CH 50V 100P	1	
C9215		ECEV0JV470Q	E.CAPACITOR 6.3V 47U	1	
C9223		ECEV0JV470Q	E.CAPACITOR 6.3V 47U	1	
C9233		ECEV0JV470Q	E.CAPACITOR 6.3V 47U	1	
C9235		ECUM1H103KBN	C.CAPACITOR CH 50V 0.01U	1	
C9243		ECEV0JV470Q	E.CAPACITOR 6.3V 47U	1	

Ref.No.		Part No.	Part Name & Description	Pcs	Remarks
C9245		ECUM1H123KBN	C.CAPACITOR CH 50V 0.012U	1	
C9252		ECUM1E104ZFN	C.CAPACITOR CH 25V 0.1U	1	
C9285		ECUM1H070DCN	C.CAPACITOR CH 50V 7P	1	
C9286		ECUM1H100DCN	C.CAPACITOR CH 50V 10P	1	
C9287		ECUM1H270JCN	C.CAPACITOR CH 50V 27P	1	
C9289		ECEV0JV470Q	E.CAPACITOR 6.3V 47U	1	
C9290		ECUM1H103ZFN	C.CAPACITOR 50V 0.01U	1	
C9293		ECUM1H471JCN	C.CAPACITOR CH 50V 470P	1	
C9295		ECUM1H103KBN	C.CAPACITOR CH 50V 0.01U	1	
C9310		ECUM1H470JCN	C.CAPACITOR CH 50V 47P	1	
C9314		ECUM1H103KBN	C.CAPACITOR CH 50V 0.01U	1	
C9316		ECUM1H270JCN	C.CAPACITOR CH 50V 27P	1	
C9317		ECUM1H070DCN	C.CAPACITOR CH 50V 7P	1	
C9318		ECUM1H100DCN	C.CAPACITOR CH 50V 10P	1	
C9322		ECEV0JV470Q	E.CAPACITOR 6.3V 47U	1	
C9323		ECUM1H103KBN	C.CAPACITOR CH 50V 0.01U	1	
C9324		ECUM1E104KBN	C.CAPACITOR CH 25V 0.1U	1	
C9325		ECUM1H103KBN	C.CAPACITOR CH 50V 0.01U	1	
C9330		ECUM1H103KBN	C.CAPACITOR CH 50V 0.01U	1	
C9331		ECUM1H221JCN	C.CAPACITOR CH 50V 220P	1	
C9332		ECUM1H103KBN	C.CAPACITOR CH 50V 0.01U	1	
C9333		ECEV0JV220Q	E.CAPACITOR 6.3V 22U	1	
C9334,35		ECEV0JV470Q	E.CAPACITOR 6.3V 47U	2	
C9336		ECUM1H102JCN	C.CAPACITOR CH 50V 1000P	1	
C9337		ECUM1E104KBN	C.CAPACITOR CH 25V 0.1U	1	
C9338		ECUM1H222KBN	C.CAPACITOR CH 50V 2200P	1	
C9339		ECUM1H080DCN	C.CAPACITOR CH 50V 80P	1	
C9340,41		ECUM1H103KBN	C.CAPACITOR CH 50V 0.01U	2	
C9342		ECUM1H470JCN	C.CAPACITOR CH 50V 47P	1	
C9343		ECUM1H103KBN	C.CAPACITOR CH 50V 0.01U	1	
C9345		ECUM1H103KBN	C.CAPACITOR CH 50V 0.01U	1	
C9385		ECUM1E104KBN	C.CAPACITOR CH 25V 0.1U	1	
C9395		ECUM1C105ZFN	C.CAPACITOR CH 16V 1U	1	
C9401		ECUM1H103ZFN	C.CAPACITOR 50V 0.01U	1	
C9402		ECEV0JV470Q	E.CAPACITOR 6.3V 47U	1	
C9403		ECUM1H103ZFN	C.CAPACITOR 50V 0.01U	1	
C9404		ECEV0JV470Q	E.CAPACITOR 6.3V 47U	1	
C9405		ECUM1H103ZFN	C.CAPACITOR 50V 0.01U	1	
C9406		ECUM1H102JCN	C.CAPACITOR CH 50V 1000P	1	
C9408,09		ECUM1H103ZFN	C.CAPACITOR 50V 0.01U	2	
C9411-13		ECUM1H103ZFN	C.CAPACITOR 50V 0.01U	3	
C9414		ECEV0JV470Q	E.CAPACITOR 6.3V 47U	1	
C9415		ECUM1H103ZFN	C.CAPACITOR 50V 0.01U	1	
C9416		ECEV1CV220Q	E.CAPACITOR 16V 22U	1	
C9417		ECUM1C105ZFN	C.CAPACITOR CH 16V 1U	1	
C9418		ECUM1H560JCN	C.CAPACITOR CH 50V 56P	1	
C9420		ECUM1H103ZFN	C.CAPACITOR 50V 0.01U	1	
C9421		ECUM1H102JCN	C.CAPACITOR CH 50V 1000P	1	
C9434,35		ECUM1H102JCN	C.CAPACITOR CH 50V 1000P	2	
C9438		ECUM1H102JCN	C.CAPACITOR CH 50V 1000P	1	
C9439		ECUM1E104KBN	C.CAPACITOR CH 25V 0.1U	1	
C9440		ECUM1H152KBN	C.CAPACITOR CH 50V 1500P	1	
C9445,46		ECUM1H103ZFN	C.CAPACITOR 50V 0.01U	2	
C9501		ECUM1H103ZFN	C.CAPACITOR 50V 0.01U	1	
C9502		ECEV0JV470Q	E.CAPACITOR 6.3V 47U	1	
C9503		ECUM1H103ZFN	C.CAPACITOR 50V 0.01U	1	
C9504		ECEV0JV470Q	E.CAPACITOR 6.3V 47U	1	
C9505		ECUM1H103ZFN	C.CAPACITOR 50V 0.01U	1	
C9506		ECEV0JV470Q	E.CAPACITOR 6.3V 47U	1	
C9601		ECEV0JV470Q	E.CAPACITOR 6.3V 47U	1	
C9602,03		ECUM1H103KBN	C.CAPACITOR CH 50V 0.01U	2	
C9604		ECEV0JV470Q	E.CAPACITOR 6.3V 47U	1	
C9606-13		ECUM1E104ZFN	C.CAPACITOR CH 25V 0.1U	8	
C9615		ECUM1C105ZFN	C.CAPACITOR CH 16V 1U	1	
C9617-21		ECUM1E104ZFN	C.CAPACITOR CH 25V 0.1U	5	
C9650		ECUM1H103ZFN	C.CAPACITOR 50V 0.01U	1	
C9651,52		ECUM1E104ZFN	C.CAPACITOR CH 25V 0.1U	2	
C9653		ECUM1H471JCN	C.CAPACITOR CH 50V 470P	1	
C9654		ECEV1CV100Q	E.CAPACITOR 16V 10U	1	
C9655		ECEV0JV470Q	E.CAPACITOR 6.3V 47U	1	
C9656-58		ECUM1E104ZFN	C.CAPACITOR CH 25V 0.1U	3	
C9659		ECUM1H101JCN	C.CAPACITOR CH 50V 100P	1	
C9676		ECUM1H103KBN	C.CAPACITOR CH 50V 0.01U	1	
C9680		ECUM1E104ZFN	C.CAPACITOR CH 25V 0.1U	1	
C9691		ECUM1H101JCN	C.CAPACITOR CH 50V 100P	1	

Ref.No.	Part No.	Part Name & Description	Pcs	Remarks
C9692	ECUM1H181JCN	C.CAPACITOR CH 50V 180P	1	
C9693	ECUM1H330JCN	C.CAPACITOR CH 50V 33P	1	
C9694	ECUM1H181JCN	C.CAPACITOR CH 50V 180P	1	
C9697	ECUM1H103KBN	C.CAPACITOR CH 50V 0.01U	1	
D9111,12	MA151K	DIODE	2	<R>
D9201	MA151K	DIODE	1	<R>
D9301,02	MA151K	DIODE	2	<R>
D9401	MA151K	DIODE	1	<R>
D9501	11EQS04	DIODE	1	<R>
D9655	MA704	DIODE	1	<R>
DL9201	VLD0265	DELAY	1	
DL9202	VLD0266	DELAY	1	
FL9003	VLF0932	FILTER	1	
FL9101	VLF0639	FILTER	1	
FL9102	ELB4M022	FILTER	1	
FL9103	VLF0932	FILTER	1	
FL9302	VLF1048	FILTER	1	
FL9401	VLF1132	FILTER	1	
FL9601	VLF1016A223	FILTER	1	
IC9011	TC7S08F	IC	1	<R>
IC9012	NJM082BM	IC	1	<R>
IC9013	MC14577CP	IC	1	<R>
IC9014	TC74HC221AF	IC	1	<R>
IC9015	AN3916	IC	1	<R>
IC9016	TC7S66F	IC	1	<R>
IC9017	TC7S04F	IC	1	<R>
IC9021	NJM78L05UA	IC	1	<R>
IC9035	TC7S08F	IC	1	<R>
IC9101	TC4W53F	IC	1	<R>
IC9102	TC74HC221AF	IC	1	<R>
IC9103	MC14577CP	IC	1	<R>
IC9104	TC4S584F	IC	1	<R>
IC9105	TC74HC123AF	IC	1	<R>
IC9106	TC7S08F	IC	1	<R>
IC9112	NJM082BM	IC	1	<R>
IC9113	MC14577CP	IC	1	<R>
IC9114	TC74HC221AF	IC	1	<R>
IC9115	AN3916	IC	1	<R>
IC9121	NJM78L05UA	IC	1	<R>
IC9201	TC7S04F	IC	1	<R>
IC9202	TC7S66F	IC	1	<R>
IC9203	LM324NS	IC	1	<R>
IC9204	TC7S66F	IC	1	<R>
IC9209	MC14577CP	IC	1	<R>
IC9212	TK16031M	IC	1	<R>
IC9222	TK16031M	IC	1	<R>
IC9302	AN6367S	IC	1	<R>
IC9310	NJM2234MA	IC	1	<R>
IC9401	AN614	IC	1	<R>
IC9403	TC4W53F	IC	1	<R>
IC9404	SN74LS221NS	IC	1	<R>
IC9405	TA75W555FU	IC	1	<R>
IC9406	TA75S393F	IC	1	<R>
IC9409	TC7S04F	IC	1	<R>
IC9410	MC14538BF	IC	1	<R>
IC9411	MC14013BF	IC	1	<R>
IC9412	MC14040BF	IC	1	<R>
IC9413	MC14538BF	IC	1	<R>
IC9417	MC14013BF	IC	1	<R>
IC9419	TC4S30F	IC	1	<R>
IC9601	CXD2105AQ	IC	1	<R>
IC9602	SN74LS221NS	IC	1	<R>
IC9603	AN78L05	IC	1	<R>

Ref.No.	Part No.	Part Name & Description	Pcs	Remarks
IC9606	TC7WU04F	IC	1	<R>
IC9655	CXD1175AM	IC	1	<R>
IC9691	MC74HC74AF	IC	1	<R>
L9002,03	VLQ0319K101	COIL 100UH	2	
L9010	VLQ0163J221	COIL 220UH	1	
L9102,03	VLQ0319K101	COIL 100UH	2	
L9105,06	VLQ0163J270	COIL 27UH	2	
L9110	VLQ0163J221	COIL 220UH	1	
L9225	VLQ0319K101	COIL 100UH	1	
L9227	VLQ0163J180	COIL 18UH	1	
L9228	VLQ0163J150	COIL 15UH	1	
L9235	VLQ0319K101	COIL 100UH	1	
L9304	VLQ0319K101	COIL 100UH	1	
L9308	VLQ0163J470	COIL 47UH	1	
L9328	VLQ0163J150	COIL 15UH	1	
L9329	VLQ0163J180	COIL 18UH	1	
L9402	VLQ0319K101	COIL 100UH	1	
L9404,05	VLQ0319K101	COIL 100UH	2	
L9501	VLP0133	COIL	1	
L9602	VLQ0319K101	COIL 100UH	1	
L9691,92	VLQ0163J2R7	COIL 2.7UH	2	
L9693	VLQ0163J151	COIL 150UH	1	
P9001	VJP1141	CONNECTOR (MALE) 2P	1	
P9501,02	VJS2907D018	CONNECTOR (FEMALE) 18P	2	
P9503	VJP1246T	CONNECTOR (MALE) 6P	1	
Q9001	XN4601	TRANSISTOR-TRANSISTOR	1	<R>
Q9008	MSB709-R	TRANSISTOR	1	<R>
Q9018	MSD601-R	TRANSISTOR	1	<R>
Q9019	2SK198-R	TRANSISTOR	1	<R>
Q9020	MSB709-R	TRANSISTOR	1	<R>
Q9034	MSD601-R	TRANSISTOR	1	<R>
Q9101,02	MSB709-R	TRANSISTOR	2	<R>
Q9103	XN4601	TRANSISTOR-TRANSISTOR	1	<R>
Q9104	MSD601-R	TRANSISTOR	1	<R>
Q9105	XN4601	TRANSISTOR-TRANSISTOR	1	<R>
Q9107	MSD601-R	TRANSISTOR	1	<R>
Q9108-10	MSB709-R	TRANSISTOR	3	<R>
Q9118	MSD601-R	TRANSISTOR	1	<R>
Q9119	2SK198-R	TRANSISTOR	1	<R>
Q9134	MSD601-R	TRANSISTOR	1	<R>
Q9202	MSD601-R	TRANSISTOR	1	<R>
Q9207	MSD601-R	TRANSISTOR	1	<R>
Q9221	MSD601-R	TRANSISTOR	1	<R>
Q9319,20	MSC2295-B	TRANSISTOR	2	<R>
Q9321	MSD601-R	TRANSISTOR	1	<R>
Q9322	MSB709-R	TRANSISTOR	1	<R>
Q9324,25	MSD601-R	TRANSISTOR	2	<R>
Q9326	MSC2295-B	TRANSISTOR	1	<R>
Q9401	MSD601-R	TRANSISTOR	1	<R>
Q9691	MSB709-R	TRANSISTOR	1	<R>
QR9101	MRN1403	TRANSISTOR	1	<R>
QR9307	MRN1404	TRANSISTOR	1	<R>
QR9316	MRN1402	TRANSISTOR	1	<R>
R9001	ERJ6GEY0R00	M.RESISTOR CH 1/10W 0	1	
R9003	ERJ6GEYJ103	M.RESISTOR CH 1/10W 10K	1	
R9004	ERJ6GEYJ101	M.RESISTOR CH 1/10W 100	1	
R9005	ERJ6GEYG472	M.RESISTOR CH 1/10W 4.7K	1	
R9006	ERJ6GEY0R00	M.RESISTOR CH 1/10W 0	1	
R9023	ERJ6GEYJ104	M.RESISTOR CH 1/10W 100K	1	
R9031,32	ERJ6GEYJ223	M.RESISTOR CH 1/10W 22K	2	

Ref.No.	Part No.	Part Name & Description	Pcs	Remarks
R9035	ERJ6GEYJ101	M.RESISTOR CH 1/10W 100	1	
R9036,37	ERJ6GEYJ103	M.RESISTOR CH 1/10W 10K	2	
R9038	ERJ6GEYJ152	M.RESISTOR CH 1/10W 1.5K	1	
R9039	ERJ6GEYJ183	M.RESISTOR CH 1/10W 18K	1	
R9040	ERJ6GEYJ222	M.RESISTOR CH 1/10W 2.2K	1	
R9041	ERJ6GEYJ474	M.RESISTOR CH 1/10W 470K	1	
R9042	ERJ6GEYJ272	M.RESISTOR CH 1/10W 2.7K	1	
R9043,44	ERJ6GEYJ102	M.RESISTOR CH 1/10W 1K	2	
R9045	ERJ6GEYJ392	M.RESISTOR CH 1/10W 3.9K	1	
R9046	ERJ6GEYJ473	M.RESISTOR CH 1/10W 47K	1	
R9047	ERJ6GEYJ562	M.RESISTOR CH 1/10W 5.6K	1	
R9048	ERJ6GEYJ123	M.RESISTOR CH 1/10W 12K	1	
R9050	ERJ6GEYJ223	M.RESISTOR CH 1/10W 22K	1	
R9054	ERJ6GEYJ392	M.RESISTOR CH 1/10W 3.9K	1	
R9058	ERJ6GEYG333	M.RESISTOR CH 1/10W 33K	1	
R9069	ERJ6GEYG472	M.RESISTOR CH 1/10W 4.7K	1	
R9070	ERJ6GEYJ561	M.RESISTOR CH 1/10W 560	1	
R9071,72	ERJ6GEYG333	M.RESISTOR CH 1/10W 33K	2	
R9073	ERJ6GEYJ184	M.RESISTOR CH 1/10W 180K	1	
R9074	ERJ6GEYJ392	M.RESISTOR CH 1/10W 3.9K	1	
R9075	ERJ6GEYJ393	M.RESISTOR CH 1/10W 39K	1	
R9076	ERJ6GEYJ183	M.RESISTOR CH 1/10W 18K	1	
R9077,78	ERJ6GEYG472	M.RESISTOR CH 1/10W 4.7K	2	
R9079,80	ERJ6GEYJ330	M.RESISTOR CH 1/10W 33	2	
R9096	ERJ6GEY0R00	M.RESISTOR CH 1/10W 0	1	
R9101,02	ERJ6GEYJ470	M.RESISTOR CH 1/10W 47	2	
R9103	ERJ6GEYJ474	M.RESISTOR CH 1/10W 470K	1	
R9104	ERJ6GEYJ394	M.RESISTOR CH 1/10W 390K	1	
R9105	ERJ6GEYJ474	M.RESISTOR CH 1/10W 470K	1	
R9106,07	ERJ6GEYJ103	M.RESISTOR CH 1/10W 10K	2	
R9108,09	ERJ6GEYJ102	M.RESISTOR CH 1/10W 1K	2	
R9110	ERJ6GEYJ105	M.RESISTOR CH 1/10W 1M	1	
R9111	ERJ6GEY0R00	M.RESISTOR CH 1/10W 0	1	
R9112	ERJ6GEYJ393	M.RESISTOR CH 1/10W 39K	1	
R9113	ERJ6GEYJ821	M.RESISTOR CH 1/10W 820	1	
R9114	ERJ6GEYJ331	M.RESISTOR CH 1/10W 330	1	
R9115	ERJ6GEYJ470	M.RESISTOR CH 1/10W 47	1	
R9116	ERJ6GEYJ152	M.RESISTOR CH 1/10W 1.5K	1	
R9117,18	ERJ6GEYJ102	M.RESISTOR CH 1/10W 1K	2	
R9120	ERJ6GEYJ102	M.RESISTOR CH 1/10W 1K	1	
R9125	ERJ6GEYJ102	M.RESISTOR CH 1/10W 1K	1	
R9126	ERJ6GEYJ681	M.RESISTOR CH 1/10W 680	1	
R9128	ERJ6GEYJ102	M.RESISTOR CH 1/10W 1K	1	
R9131,32	ERJ6GEYJ223	M.RESISTOR CH 1/10W 22K	2	
R9135	ERJ6GEYJ101	M.RESISTOR CH 1/10W 100	1	
R9136	ERJ6GEYJ122	M.RESISTOR CH 1/10W 1.2K	1	
R9137	ERJ6GEYJ103	M.RESISTOR CH 1/10W 10K	1	
R9138	ERJ6GEYJ152	M.RESISTOR CH 1/10W 1.5K	1	
R9139	ERJ6GEYJ183	M.RESISTOR CH 1/10W 18K	1	
R9140	ERJ6GEYJ102	M.RESISTOR CH 1/10W 1K	1	
R9141	ERJ6GEYJ224	M.RESISTOR CH 1/10W 220K	1	
R9142	VRE0034E272	M.RESISTOR CH 1/10W 2.7K	1	
R9143	VRE0034E102	M.RESISTOR CH 1/10W 1K	1	
R9144	ERJ6GEYJ392	M.RESISTOR CH 1/10W 3.9K	1	
R9145	ERJ6GEYJ222	M.RESISTOR CH 1/10W 2.2K	1	
R9146	ERJ6GEYJ473	M.RESISTOR CH 1/10W 47K	1	
R9147	ERJ6GEY0R00	M.RESISTOR CH 1/10W 0	1	
R9148	ERJ6GEYJ123	M.RESISTOR CH 1/10W 12K	1	
R9150	ERJ6GEYJ223	M.RESISTOR CH 1/10W 22K	1	
R9151	ERJ6GEYJ103	M.RESISTOR CH 1/10W 10K	1	
R9155	ERJ6GEYJ470	M.RESISTOR CH 1/10W 47	1	
R9156	ERJ6GEYJ102	M.RESISTOR CH 1/10W 1K	1	
R9166	ERJ6GEYJ102	M.RESISTOR CH 1/10W 1K	1	
R9169	ERJ6GEYG472	M.RESISTOR CH 1/10W 4.7K	1	
R9170	VRE0034E561	M.RESISTOR CH 1/10W 560	1	
R9171	ERJ6GEYJ182	M.RESISTOR CH 1/10W 1.8K	1	
R9172	ERJ6GEYJ392	M.RESISTOR CH 1/10W 3.9K	1	
R9173	ERJ6GEYJ152	M.RESISTOR CH 1/10W 1.5K	1	
R9174	ERJ6GEYJ182	M.RESISTOR CH 1/10W 1.8K	1	
R9175	ERJ6GEYJ392	M.RESISTOR CH 1/10W 3.9K	1	
R9176,77	ERJ6GEYJ152	M.RESISTOR CH 1/10W 1.5K	2	
R9178	ERJ6GEYJ331	M.RESISTOR CH 1/10W 330	1	
R9179	ERJ6GEYJ820	M.RESISTOR CH 1/10W 82	1	
R9180	ERJ6GEYJ152	M.RESISTOR CH 1/10W 1.5K	1	
R9194	ERJ6GEY0R00	M.RESISTOR CH 1/10W 0	1	

Ref.No.	Part No.	Part Name & Description	Pcs	Remarks
R9196	VRE0034E241	M.RESISTOR CH 1/10W 240	1	
R9201	ERJ6GEYJ103	M.RESISTOR CH 1/10W 10K	1	
R9202	ERJ6GEYJ102	M.RESISTOR CH 1/10W 1K	1	
R9203	ERJ6GEYJ222	M.RESISTOR CH 1/10W 2.2K	1	
R9204	ERJ6GEYJ105	M.RESISTOR CH 1/10W 1M	1	
R9205	ERJ6GEYJ101	M.RESISTOR CH 1/10W 100	1	
R9206	ERJ6GEYJ221	M.RESISTOR CH 1/10W 220	1	
R9207	ERJ6GEYJ102	M.RESISTOR CH 1/10W 1K	1	
R9208	ERJ6GEYJ122	M.RESISTOR CH 1/10W 1.2K	1	
R9210	ERJ6GEYJ102	M.RESISTOR CH 1/10W 1K	1	
R9211	ERJ6GEYJ152	M.RESISTOR CH 1/10W 1.5K	1	
R9212	ERJ6GEYJ393	M.RESISTOR CH 1/10W 39K	1	
R9214	ERJ6GEYJ272	M.RESISTOR CH 1/10W 2.7K	1	
R9215	ERJ6GEYJ102	M.RESISTOR CH 1/10W 1K	1	
R9218	ERJ6GEYJ473	M.RESISTOR CH 1/10W 47K	1	
R9219	ERJ6GEYJ221	M.RESISTOR CH 1/10W 220	1	
R9220	ERJ6GEYJ102	M.RESISTOR CH 1/10W 1K	1	
R9221	ERJ6GEYJ103	M.RESISTOR CH 1/10W 10K	1	
R9222	ERJ6GEYJ561	M.RESISTOR CH 1/10W 560	1	
R9225	ERJ6GEYJ223	M.RESISTOR CH 1/10W 22K	1	
R9226	ERJ6GEYJ332	M.RESISTOR CH 1/10W 3.3K	1	
R9229	ERJ6GEYJ473	M.RESISTOR CH 1/10W 47K	1	
R9232	ERJ6GEYJ102	M.RESISTOR CH 1/10W 1K	1	
R9234	VRE0034E751	M.RESISTOR CH 1/10W 750	1	
R9235	ERJ6GEYJ223	M.RESISTOR CH 1/10W 22K	1	
R9236	ERJ6GEYJ103	M.RESISTOR CH 1/10W 10K	1	
R9237	ERJ6GEYJ562	M.RESISTOR CH 1/10W 5.6K	1	
R9238	ERJ6GEYG472	M.RESISTOR CH 1/10W 4.7K	1	
R9240,41	ERJ6GEYJ222	M.RESISTOR CH 1/10W 2.2K	2	
R9242	ERJ6GEYJ104	M.RESISTOR CH 1/10W 100K	1	
R9243	ERJ6GEYG333	M.RESISTOR CH 1/10W 33K	1	
R9244	ERJ6GEYJ682	M.RESISTOR CH 1/10W 6.8K	1	
R9246	ERJ6GEYG153	M.RESISTOR CH 1/10W 15K	1	
R9247	ERJ6GEYJ562	M.RESISTOR CH 1/10W 5.6K	1	
R9250	ERJ6GEYJ272	M.RESISTOR CH 1/10W 2.7K	1	
R9251	ERJ6GEYJ681	M.RESISTOR CH 1/10W 680	1	
R9252	ERJ6GEYJ473	M.RESISTOR CH 1/10W 47K	1	
R9255	ERJ6GEYJ362	M.RESISTOR CH 1/10W 3.6K	1	
R9256	ERJ6GEYJ223	M.RESISTOR CH 1/10W 22K	1	
R9260	ERJ6GEYJ272	M.RESISTOR CH 1/10W 2.7K	1	
R9261	ERJ6GEYJ103	M.RESISTOR CH 1/10W 10K	1	
R9262	ERJ6GEYJ272	M.RESISTOR CH 1/10W 2.7K	1	
R9266	ERJ6GEYG153	M.RESISTOR CH 1/10W 15K	1	
R9267	ERJ6GEYJ470	M.RESISTOR CH 1/10W 47	1	
R9271	ERJ6GEYJ392	M.RESISTOR CH 1/10W 3.9K	1	
R9272	ERJ6GEYJ393	M.RESISTOR CH 1/10W 39K	1	
R9276	ERJ6GEYJ223	M.RESISTOR CH 1/10W 22K	1	
R9281	ERJ6GEYJ681	M.RESISTOR CH 1/10W 680	1	
R9282	ERJ6GEYJ102	M.RESISTOR CH 1/10W 1K	1	
R9283	ERJ6GEYG472	M.RESISTOR CH 1/10W 4.7K	1	
R9284	ERJ6GEYG153	M.RESISTOR CH 1/10W 15K	1	
R9285	ERJ6GEYJ105	M.RESISTOR CH 1/10W 1M	1	
R9286	ERJ6GEYJ183	M.RESISTOR CH 1/10W 18K	1	
R9287,88	ERJ6GEYG472	M.RESISTOR CH 1/10W 4.7K	2	
R9289,90	ERJ6GEYJ330	M.RESISTOR CH 1/10W 33	2	
R9301	ERJ6GEYJ332	M.RESISTOR CH 1/10W 3.3K	1	
R9302,03	ERJ6GEYJ102	M.RESISTOR CH 1/10W 1K	2	
R9304	ERJ6GEYJ562	M.RESISTOR CH 1/10W 5.6K	1	
R9305	ERJ6GEYJ470	M.RESISTOR CH 1/10W 47	1	
R9306-08	ERJ6GEYJ272	M.RESISTOR CH 1/10W 2.7K	3	
R9321	ERJ6GEYJ103	M.RESISTOR CH 1/10W 10K	1	
R9322	ERJ6GEYJ102	M.RESISTOR CH 1/10W 1K	1	
R9330	ERJ6GEYJ222	M.RESISTOR CH 1/10W 2.2K	1	
R9342	ERJ6GEYJ821	M.RESISTOR CH 1/10W 820	1	
R9343	ERJ6GEYJ221	M.RESISTOR CH 1/10W 220	1	
R9353	ERJ6GEYJ102	M.RESISTOR CH 1/10W 1K	1	
R9356	ERJ6GEY0R00	M.RESISTOR CH 1/10W 0	1	
R9357	ERJ6GEYJ152	M.RESISTOR CH 1/10W 1.5K	1	
R9359	ERJ6GEYJ822	M.RESISTOR CH 1/10W 8.2K	1	
R9360	ERJ6GEYJ182	M.RESISTOR CH 1/10W 1.8K	1	
R9361	ERJ6GEYJ223	M.RESISTOR CH 1/10W 22K	1	
R9363	ERJ6GEYG472	M.RESISTOR CH 1/10W 4.7K	1	
R9364	ERJ6GEYJ332	M.RESISTOR CH 1/10W 3.3K	1	
R9365	ERJ6GEYJ821	M.RESISTOR CH 1/10W 820	1	
R9366,67	ERJ6GEYJ223	M.RESISTOR CH 1/10W 22K	2	

Ref.No.		Part No.	Part Name & Description	Pcs	Remarks
R9368		ERJ6GEYJ102	M.RESISTOR CH 1/10W 1K	1	
R9369		ERJ6GEYJ681	M.RESISTOR CH 1/10W 680	1	
R9370		ERJ6GEYJ470	M.RESISTOR CH 1/10W 47	1	
R9371		ERJ6GEY0R00	M.RESISTOR CH 1/10W 0	1	
R9372		ERJ6GEYJ561	M.RESISTOR CH 1/10W 560	1	
R9377		ERJ6GEYJ102	M.RESISTOR CH 1/10W 1K	1	
R9378		ERJ6GEYJ104	M.RESISTOR CH 1/10W 100K	1	
R9379		ERJ6GEYJ332	M.RESISTOR CH 1/10W 3.3K	1	
R9388		ERJ6GEYJ102	M.RESISTOR CH 1/10W 1K	1	
R9389		ERJ6GEYJ222	M.RESISTOR CH 1/10W 2.2K	1	
R9391		ERJ6GEY0R00	M.RESISTOR CH 1/10W 0	1	
R9401		ERJ6GEYJ471	M.RESISTOR CH 1/10W 470	1	
R9402		ERJ6GEY0R00	M.RESISTOR CH 1/10W 0	1	
R9403		ERJ6GEYG472	M.RESISTOR CH 1/10W 4.7K	1	
R9404		ERJ6GEYJ152	M.RESISTOR CH 1/10W 1.5K	1	
R9405		ERJ6GEYJ221	M.RESISTOR CH 1/10W 220	1	
R9406		ERJ6GEYJ222	M.RESISTOR CH 1/10W 2.2K	1	
R9407		ERJ6GEY0R00	M.RESISTOR CH 1/10W 0	1	
R9409		ERJ6GEYG472	M.RESISTOR CH 1/10W 4.7K	1	
R9410		ERJ6GEYJ103	M.RESISTOR CH 1/10W 10K	1	
R9411,12		ERJ6GEYJ102	M.RESISTOR CH 1/10W 1K	2	
R9413		ERJ6GEYJ223	M.RESISTOR CH 1/10W 22K	1	
R9414		ERJ6GEYJ102	M.RESISTOR CH 1/10W 1K	1	
R9415		ERJ6GEYJ103	M.RESISTOR CH 1/10W 10K	1	
R9416		ERJ6GEYJ912	M.RESISTOR CH 1/10W 9.1K	1	
R9417		ERJ6GEYJ104	M.RESISTOR CH 1/10W 100K	1	
R9418		ERJ6GEYJ273	M.RESISTOR CH 1/10W 27K	1	
R9419		ERJ6GEYJ123	M.RESISTOR CH 1/10W 12K	1	
R9420		ERJ6GEYJ152	M.RESISTOR CH 1/10W 1.5K	1	
R9421,22		ERJ6GEYJ103	M.RESISTOR CH 1/10W 10K	2	
R9423		ERJ6GEYG472	M.RESISTOR CH 1/10W 4.7K	1	
R9424		ERJ6GEYJ103	M.RESISTOR CH 1/10W 10K	1	
R9425		ERJ6GEYJ562	M.RESISTOR CH 1/10W 5.6K	1	
R9426		ERJ6GEYG472	M.RESISTOR CH 1/10W 4.7K	1	
R9429		ERJ6GEYJ105	M.RESISTOR CH 1/10W 1M	1	
R9454		ERJ6GEYJ101	M.RESISTOR CH 1/10W 100	1	
R9455		ERJ6GEYJ103	M.RESISTOR CH 1/10W 10K	1	
R9456		ERJ6GEYG153	M.RESISTOR CH 1/10W 15K	1	
R9457		ERJ6GEYJ433	M.RESISTOR CH 1/10W 43K	1	
R9458		ERJ6GEYJ473	M.RESISTOR CH 1/10W 47K	1	
R9459		ERJ6GEYJ224	M.RESISTOR CH 1/10W 220K	1	
R9460		ERJ6GEYJ124	M.RESISTOR CH 1/10W 120K	1	
R9602		ERJ6GEY0R00	M.RESISTOR CH 1/10W 0	1	
R9604,05		ERJ6GEY0R00	M.RESISTOR CH 1/10W 0	2	
R9607		ERJ6GEYJ101	M.RESISTOR CH 1/10W 100	1	
R9608		ERJ6GEY0R00	M.RESISTOR CH 1/10W 0	1	
R9610		ERJ6GEY0R00	M.RESISTOR CH 1/10W 0	1	
R9612		ERJ6GEYJ221	M.RESISTOR CH 1/10W 220	1	
R9613		ERJ6GEYG472	M.RESISTOR CH 1/10W 4.7K	1	
R9614		ERJ6GEYJ102	M.RESISTOR CH 1/10W 1K	1	
R9615		ERJ6GEYJ272	M.RESISTOR CH 1/10W 2.7K	1	
R9616		ERJ6GEYJ332	M.RESISTOR CH 1/10W 3.3K	1	
R9617		ERJ6GEYG472	M.RESISTOR CH 1/10W 4.7K	1	
R9618		ERJ6GEYJ102	M.RESISTOR CH 1/10W 1K	1	
R9619		ERJ6GEYJ221	M.RESISTOR CH 1/10W 220	1	
R9620		ERJ6GEY0R00	M.RESISTOR CH 1/10W 0	1	
R9623		ERJ6GEY0R00	M.RESISTOR CH 1/10W 0	1	
R9625,26		ERJ6GEY0R00	M.RESISTOR CH 1/10W 0	2	
R9628		ERJ6GEY0R00	M.RESISTOR CH 1/10W 0	1	
R9631		ERJ6GEY0R00	M.RESISTOR CH 1/10W 0	1	
R9633		ERJ6GEY0R00	M.RESISTOR CH 1/10W 0	1	
R9634		ERJ6GEYJ101	M.RESISTOR CH 1/10W 100	1	
R9636		ERJ6GEYG333	M.RESISTOR CH 1/10W 33K	1	
R9641		ERJ6GEY0R00	M.RESISTOR CH 1/10W 0	1	
R9643		ERJ6GEYJ101	M.RESISTOR CH 1/10W 100	1	
R9644		ERJ6GEYJ105	M.RESISTOR CH 1/10W 1M	1	
R9651		ERJ6GEYJ102	M.RESISTOR CH 1/10W 1K	1	
R9652		ERJ6GEYJ104	M.RESISTOR CH 1/10W 100K	1	
R9653,54		ERJ6GEYJ223	M.RESISTOR CH 1/10W 22K	2	
R9655		ERJ6GEY0R00	M.RESISTOR CH 1/10W 0	1	
R9657		ERJ6GEYJ271	M.RESISTOR CH 1/10W 270	1	
R9658		ERJ6GEYJ105	M.RESISTOR CH 1/10W 1M	1	
R9660		ERJ6GEY0R00	M.RESISTOR CH 1/10W 0	1	
R9661		ERJ6GEYJ270	M.RESISTOR CH 1/10W 27	1	
R9663		ERJ6GEYJ473	M.RESISTOR CH 1/10W 47K	1	

Ref.No.		Part No.	Part Name & Description	Pcs	Remarks
R9670		ERJ6GEY0R00	M.RESISTOR CH 1/10W 0	1	
R9689		ERJ6GEYJ182	M.RESISTOR CH 1/10W 1.8K	1	
R9691		ERJ6GEYJ562	M.RESISTOR CH 1/10W 5.6K	1	
R9693		ERJ6GEY0R00	M.RESISTOR CH 1/10W 0	1	
R9694		ERJ6GEYJ222	M.RESISTOR CH 1/10W 2.2K	1	
R9695		ERJ6GEYG472	M.RESISTOR CH 1/10W 4.7K	1	
R9696		ERJ6GEYJ272	M.RESISTOR CH 1/10W 2.7K	1	
R9697		ERJ6GEYJ102	M.RESISTOR CH 1/10W 1K	1	
R9698		ERJ6GEYJ470	M.RESISTOR CH 1/10W 47	1	
R9699		ERJ6GEYG472	M.RESISTOR CH 1/10W 4.7K	1	
VR9001		EVN32CA00B24	VARIABLE 20K	1	
VR9106		EVN32CA00B24	VARIABLE 20K	1	
VR9201		EVN32CA00B14	V.RESISTOR 10K	1	
VR9202		EVN32CA00B13	V.RESISTOR 1K	1	
VR9212		EVN32CA00B14	V.RESISTOR 10K	1	
VR9222		EVN32CA00B14	V.RESISTOR 10K	1	
VR9232		EVN32CA00B13	V.RESISTOR 1K	1	
VR9301,02		EVM7DGA00B53	V.RESISTOR 5K	2	
X9301		VSX0406	CRYSTAL OSCILLATOR	1	<R>
			MISCELLANEOUS		
E114		VSC2483	SHIELD CASE	1	
E115		VSC2485	SHIELD CASE	1	

Ref.No.		Part No.	Part Name & Description	Pcs	Remarks
		VEP03B44C	P.C.BOARD W/COMPONENT		AG-8700E
			VIDEO YC		
C3001		ECUM1H330JCN	C.CAPACITOR CH 50V 33P	1	
C3003-06		ECUM1H103ZFN	C.CAPACITOR 50V 0.01U	4	
C3008,09		ECUM1H103ZFN	C.CAPACITOR 50V 0.01U	2	
C3010		ECUM1H220JCN	C.CAPACITOR CH 50V 22P	1	
C3012		ECUM1H103ZFN	C.CAPACITOR 50V 0.01U	1	
C3013		ECUM1H330JCN	C.CAPACITOR CH 50V 33P	1	
C3014		ECUM1H050CCN	C.CAPACITOR CH 50V 5P	1	
C3020-22		ECUM1H103ZFN	C.CAPACITOR 50V 0.01U	3	
C3023		ECUM1E104ZFN	C.CAPACITOR CH 25V 0.1U	1	
C3024		ECUM1H103ZFN	C.CAPACITOR 50V 0.01U	1	
C3025		ECUM1H223KBN	C.CAPACITOR 50V 0.022U	1	
C3026		ECUM1C154KBN	C.CAPACITOR CH 16V 0.15U	1	
C3027		ECUM1E473KBN	C.CAPACITOR CH 25V 0.047U	1	
C3028,29		ECUM1H473ZFN	C.CAPACITOR CH 50V 0.047U	2	
C3030		ECEV1EN4R7Q	E.CAPACITOR 25V 4.7U	1	
C3032		ECUM1H221GCN	C.CAPACITOR CH 50V 220P	1	
C3033-35		ECUM1H271GCN	C.CAPACITOR CH 50V 270P	3	
C3038		ECQP1H561JZ	P.CAPACITOR 50V 560P	1	
C3039		ECUM1H820GCN	C.CAPACITOR CH 50V 82P	1	
C3040		ECQP1H911GZ	P.CAPACITOR 50V 910P	1	
C3042		ECUM1H080DCN	C.CAPACITOR CH 50V 80P	1	
C3043		ECUM1H820JCN	C.CAPACITOR CH 50V 82P	1	
C3044		ECUM1H560JCN	C.CAPACITOR CH 50V 56P	1	
C3045		ECUM1H103ZFN	C.CAPACITOR 50V 0.01U	1	
C3047		ECUM1H103ZFN	C.CAPACITOR 50V 0.01U	1	
C3048		ECUM1H470JCN	C.CAPACITOR CH 50V 47P	1	
C3049		ECEV1CV100Q	E.CAPACITOR 16V 10U	1	
C3051-55		ECEV1CV100Q	E.CAPACITOR 16V 10U	5	
C3056-61		ECEV1EV4R7Q	E.CAPACITOR 25V 4.7U	6	
C3062		ECEV0GV470Q	E.CAPACITOR 4V 47U	1	
C3063		ECEV1CV100Q	E.CAPACITOR 16V 10U	1	
C3064		ECEV0JV220Q	E.CAPACITOR 6.3V 22U	1	
C3065		ECEV0JV470Q	E.CAPACITOR 6.3V 47U	1	
C3066,67		ECEV1CV220Q	E.CAPACITOR 16V 22U	2	
C3068,69		ECEV0JV470Q	E.CAPACITOR 6.3V 47U	2	
C3070		ECEV1HV010Q	E.CAPACITOR 50V 1U	1	
C3072-76		ECUM1H103ZFN	C.CAPACITOR 50V 0.01U	5	
C3078		ECEV0JV470Q	E.CAPACITOR 6.3V 47U	1	
C3079		ECEV1CV470Q	E.CAPACITOR CH 16V 47U	1	
C3080-83		ECEV0JV470Q	E.CAPACITOR 6.3V 47U	4	
C3084,85		ECUM1H103ZFN	C.CAPACITOR 50V 0.01U	2	
C3086,87		ECUM1C105ZFN	C.CAPACITOR CH 16V 1U	2	
C3088		ECUM1E104ZFN	C.CAPACITOR CH 25V 0.1U	1	
C3089		ECEV1EN4R7Q	E.CAPACITOR 25V 4.7U	1	
C3091,92		ECUM1E104ZFN	C.CAPACITOR CH 25V 0.1U	2	
C3093		ECUM1H150JCN	C.CAPACITOR CH 50V 15P	1	
C3094,95		ECUM1H101JCN	C.CAPACITOR CH 50V 100P	2	
C3096		ECUM1H103ZFN	C.CAPACITOR 50V 0.01U	1	
C3097		ECUM1H150JCN	C.CAPACITOR CH 50V 15P	1	
C3100		ECUM1E104ZFN	C.CAPACITOR CH 25V 0.1U	1	
C3101		ECUM1C105ZFN	C.CAPACITOR CH 16V 1U	1	
C3102		ECUM1E104ZFN	C.CAPACITOR CH 25V 0.1U	1	
C3112		ECUM1C154KBN	C.CAPACITOR CH 16V 0.15U	1	
C3202		ECUM1H271JCN	C.CAPACITOR CH 50V 270P	1	
C3203-05		ECUM1H103ZFN	C.CAPACITOR 50V 0.01U	3	
C3206		ECUM1C105ZFN	C.CAPACITOR CH 16V 1U	1	
C3207		ECUM1H101JCN	C.CAPACITOR CH 50V 100P	1	
C3208		ECUM1E104KBN	C.CAPACITOR CH 25V 0.1U	1	
C3209		ECUM1H102JCN	C.CAPACITOR CH 50V 1000P	1	
C3210		ECUM1H050CCN	C.CAPACITOR CH 50V 5P	1	
C3211		ECUM1H120JUN	C.CAPACITOR 50V 12P	1	
C3212		ECUM1H103ZFN	C.CAPACITOR 50V 0.01U	1	
C3213		ECEV0JV470Q	E.CAPACITOR 6.3V 47U	1	
C3214-16		ECUM1H103ZFN	C.CAPACITOR 50V 0.01U	3	
C3217		ECEV1HV3R3Q	E.CAPACITOR 50V 3.3U	1	
C3218,19		ECUM1H103KBN	C.CAPACITOR CH 50V 0.01U	2	
C3220		ECEV1EV4R7Q	E.CAPACITOR 25V 4.7U	1	
C3221		ECEV1HV2R2Q	E.CAPACITOR 50V 2.2U	1	
C3222		ECUM1H103KBN	C.CAPACITOR CH 50V 0.01U	1	

Ref.No.		Part No.	Part Name & Description	Pcs	Remarks
C3223		ECUM1H223KBN	C.CAPACITOR 50V 0.022U	1	
C3224		ECUM1H471JCN	C.CAPACITOR CH 50V 470P	1	
C3225		ECEV1HV010Q	E.CAPACITOR 50V 1U	1	
C3226		ECUM1E104ZFN	C.CAPACITOR CH 25V 0.1U	1	
C3227		ECUM1H103ZFN	C.CAPACITOR 50V 0.01U	1	
C3228,29		ECQV1H154JZ	P.CAPACITOR 50V 0.15U	2	
C3230		ECUM1H103ZFN	C.CAPACITOR 50V 0.01U	1	
C3231		ECUM1H393KBN	C.CAPACITOR 50V 0.039U	1	
C3233		ECUM1H270JCN	C.CAPACITOR CH 50V 27P	1	
C3234		ECUM1H090DCN	C.CAPACITOR CH 50V 90P	1	
C3235		ECUM1E104ZFN	C.CAPACITOR CH 25V 0.1U	1	
C3236		ECUM1H151JCN	C.CAPACITOR CH 50V 150P	1	
C3237		ECUM1E104ZFN	C.CAPACITOR CH 25V 0.1U	1	
C3239,40		ECUM1E104ZFN	C.CAPACITOR CH 25V 0.1U	2	
C3241-44		ECUM1H103ZFN	C.CAPACITOR 50V 0.01U	4	
C3245		ECEV0JV470Q	E.CAPACITOR 6.3V 47U	1	
C3246		ECUM1H103ZFN	C.CAPACITOR 50V 0.01U	1	
C3247		ECUM1H060DCN	C.CAPACITOR CH 50V 6P	1	
C3248		ECUM1H103ZFN	C.CAPACITOR 50V 0.01U	1	
C3249		ECEV0JV470Q	E.CAPACITOR 6.3V 47U	1	
C3250-52		ECUM1C105ZFN	C.CAPACITOR CH 16V 1U	3	
C3253		ECEV0JV470Q	E.CAPACITOR 6.3V 47U	1	
C3254		ECUM1E104KBN	C.CAPACITOR CH 25V 0.1U	1	
C3255		ECUM1H103ZFN	C.CAPACITOR 50V 0.01U	1	
C3256		ECUM1C224KBM	C.CAPACITOR CH 16V 0.22U	1	
C3257,58		ECUM1H103ZFN	C.CAPACITOR 50V 0.01U	2	
C3259		ECEV0JV470Q	E.CAPACITOR 6.3V 47U	1	
C3261		ECUM1H103ZFN	C.CAPACITOR 50V 0.01U	1	
C3263-65		ECUM1H103ZFN	C.CAPACITOR 50V 0.01U	3	
C3266		ECEV0JV470Q	E.CAPACITOR 6.3V 47U	1	
C3267		ECUM1H103ZFN	C.CAPACITOR 50V 0.01U	1	
C3268		ECUM1E104ZFN	C.CAPACITOR CH 25V 0.1U	1	
C3269-71		ECUM1H103ZFN	C.CAPACITOR 50V 0.01U	3	
C3273		ECUM1H103ZFN	C.CAPACITOR 50V 0.01U	1	
C3274		ECUM1H102JCN	C.CAPACITOR CH 50V 1000P	1	
C3275		ECEV1HV2R2Q	E.CAPACITOR 50V 2.2U	1	
C3276		ECUM1H103ZFN	C.CAPACITOR 50V 0.01U	1	
C3277		ECUM1H271JCN	C.CAPACITOR CH 50V 270P	1	
C3278		ECUM1C105ZFN	C.CAPACITOR CH 16V 1U	1	
C3279		ECUM1H151JCN	C.CAPACITOR CH 50V 150P	1	
C3281		ECEV0JV470Q	E.CAPACITOR 6.3V 47U	1	
C3282		ECUM1H103ZFN	C.CAPACITOR 50V 0.01U	1	
C3401		ECEV0JV470Q	E.CAPACITOR 6.3V 47U	1	
C3402-06		ECUM1H103ZFN	C.CAPACITOR 50V 0.01U	5	
C3407		ECUM1H090DCN	C.CAPACITOR CH 50V 90P	1	
C3408		ECUM1H471JCN	C.CAPACITOR CH 50V 470P	1	
C3409		ECUM1H103ZFN	C.CAPACITOR 50V 0.01U	1	
C3410		ECUM1H101JCN	C.CAPACITOR CH 50V 100P	1	
C3411		ECEV1HV2R2Q	E.CAPACITOR 50V 2.2U	1	
C3412		ECUM1E224ZFN	C.CAPACITOR CH 25V 0.22U	1	
C3413-17		ECUM1H103ZFN	C.CAPACITOR 50V 0.01U	5	
C3418		ECUM1H223KBN	C.CAPACITOR 50V 0.022U	1	
C3419		ECUM1H180JCN	C.CAPACITOR CH 50V 18P	1	
C3420		ECUM1H330JCN	C.CAPACITOR CH 50V 33P	1	
C3421		ECUM1H103ZFN	C.CAPACITOR 50V 0.01U	1	
C3422		ECUM1H221JCN	C.CAPACITOR CH 50V 220P	1	
C3423		ECUM1H330JCN	C.CAPACITOR CH 50V 33P	1	
C3424		ECUM1H103ZFN	C.CAPACITOR 50V 0.01U	1	
C3425		ECEV1CV100Q	E.CAPACITOR 16V 10U	1	
C3426,27		ECUM1H103ZFN	C.CAPACITOR 50V 0.01U	2	
C3428		ECEV1EV4R7Q	E.CAPACITOR 25V 4.7U	1	
C3429		ECUM1H103ZFN	C.CAPACITOR 50V 0.01U	1	
C3430		ECEV0JV470Q	E.CAPACITOR 6.3V 47U	1	
C3431,32		ECUM1H103ZFN	C.CAPACITOR 50V 0.01U	2	
C3433		ECUM1E224ZFN	C.CAPACITOR CH 25V 0.22U	1	
C3434		ECEV1EV4R7Q	E.CAPACITOR 25V 4.7U	1	
C3435,36		ECUM1H103ZFN	C.CAPACITOR 50V 0.01U	2	
C3437-39		ECEV1CV100Q	E.CAPACITOR 16V 10U	3	
C3440		ECUM1H103ZFN	C.CAPACITOR 50V 0.01U	1	
C3441		ECUM1H101JCN	C.CAPACITOR CH 50V 100P	1	
C3442		ECUM1H270JCN	C.CAPACITOR CH 50V 27P	1	
C3443		ECUM1H560JCN	C.CAPACITOR CH 50V 56P	1	
C3444		ECEV1EV4R7Q	E.CAPACITOR 25V 4.7U	1	
C3445-47		ECUM1H103ZFN	C.CAPACITOR 50V 0.01U	3	
C3448		ECEV0JV470Q	E.CAPACITOR 6.3V 47U	1	

Ref.No.		Part No.	Part Name & Description	Pcs	Remarks
C3449,50		ECUM1H102JCN	C.CAPACITOR CH 50V 1000P	2	
C3451		ECUM1C105ZFN	C.CAPACITOR CH 16V 1U	1	
C3452		ECEV0JV470Q	E.CAPACITOR 6.3V 47U	1	
C3453-55		ECUM1H103ZFN	C.CAPACITOR 50V 0.01U	3	
C3456		ECUM1H680JCN	C.CAPACITOR CH 50V 68P	1	
C3457		ECUM1H103ZFN	C.CAPACITOR 50V 0.01U	1	
C3459		ECUM1H103ZFN	C.CAPACITOR 50V 0.01U	1	
C3460		ECUM1H151JCN	C.CAPACITOR CH 50V 150P	1	
C3461		ECUM1H103ZFN	C.CAPACITOR 50V 0.01U	1	
C3462		ECUM1H151JCN	C.CAPACITOR CH 50V 150P	1	
C3463		ECUM1H103ZFN	C.CAPACITOR 50V 0.01U	1	
C3464		ECUM1H820JCN	C.CAPACITOR CH 50V 82P	1	
C3465		ECUM1H103ZFN	C.CAPACITOR 50V 0.01U	1	
C3466,67		ECUM1E473KBN	C.CAPACITOR CH 25V 0.047U	2	
C3468		ECQV1H105JZ	P.CAPACITOR 50V 1U	1	
C3469		ECUM1H151JCN	C.CAPACITOR CH 50V 150P	1	
C3470		ECUM1H103ZFN	C.CAPACITOR 50V 0.01U	1	
C3471		ECUM1H100DCN	C.CAPACITOR CH 50V 10P	1	
C3472		ECUM1E104ZFN	C.CAPACITOR CH 25V 0.1U	1	
C3473		ECUM1H103ZFN	C.CAPACITOR 50V 0.01U	1	
C3474		ECEV0JV470Q	E.CAPACITOR 6.3V 47U	1	
C3475,76		ECUM1E104ZFN	C.CAPACITOR CH 25V 0.1U	2	
C3477		ECUM1H100DCN	C.CAPACITOR CH 50V 10P	1	
C3478		ECUM1H103ZFN	C.CAPACITOR 50V 0.01U	1	
C3479		ECEV0JV470Q	E.CAPACITOR 6.3V 47U	1	
C3480-83		ECUM1H103ZFN	C.CAPACITOR 50V 0.01U	4	
C3484,85		ECUM1E473KBN	C.CAPACITOR CH 25V 0.047U	2	
C3486		ECQV1H105JZ	P.CAPACITOR 50V 1U	1	
C3487		ECEV1CV100Q	E.CAPACITOR 16V 10U	1	
C3488-92		ECUM1H103ZFN	C.CAPACITOR 50V 0.01U	5	
C3493		ECUM1E104ZFN	C.CAPACITOR CH 25V 0.1U	1	
C3497-99		ECUM1H103ZFN	C.CAPACITOR 50V 0.01U	3	
C3500		ECUM1H151JCN	C.CAPACITOR CH 50V 150P	1	
C3501		ECEV0JV470Q	E.CAPACITOR 6.3V 47U	1	
C3502		ECUM1H103ZFN	C.CAPACITOR 50V 0.01U	1	
C3503		ECEV0JV470Q	E.CAPACITOR 6.3V 47U	1	
C3504,05		ECUM1H103ZFN	C.CAPACITOR 50V 0.01U	2	
C3507-09		ECUM1H103ZFN	C.CAPACITOR 50V 0.01U	3	
C3510		ECUM1H101JCN	C.CAPACITOR CH 50V 100P	1	
C3511,12		ECUM1H103ZFN	C.CAPACITOR 50V 0.01U	2	
C3513		ECEV0JV470Q	E.CAPACITOR 6.3V 47U	1	
C3514		ECUM1H103ZFN	C.CAPACITOR 50V 0.01U	1	
C3515		ECEV1CV470Q	E.CAPACITOR CH 16V 47U	1	
C3516		ECUM1C105ZFN	C.CAPACITOR CH 16V 1U	1	
C3517		ECUM1H103ZFN	C.CAPACITOR 50V 0.01U	1	
C3520-22		ECUM1H102JCN	C.CAPACITOR CH 50V 1000P	3	
C3523		ECUM1E104KBN	C.CAPACITOR CH 25V 0.1U	1	
C3524		ECUM1H152KBN	C.CAPACITOR CH 50V 1500P	1	
C3525		ECUM1H103ZFN	C.CAPACITOR 50V 0.01U	1	
C3527		ECUM1E104ZFN	C.CAPACITOR CH 25V 0.1U	1	
C3528		ECUM1H470JCN	C.CAPACITOR CH 50V 47P	1	
C3529,30		ECUM1H181JCN	C.CAPACITOR CH 50V 180P	2	
C3531		ECUM1H103ZFN	C.CAPACITOR 50V 0.01U	1	
C3601		ECUM1H103ZFN	C.CAPACITOR 50V 0.01U	1	
C3602		ECUM1E104ZFN	C.CAPACITOR CH 25V 0.1U	1	
C3603		ECUM1H103ZFN	C.CAPACITOR 50V 0.01U	1	
C3604		ECUM1E104ZFN	C.CAPACITOR CH 25V 0.1U	1	
D3001		MA3091-M	DIODE	1	<R>
D3002,03		MA151K	DIODE	2	<R>
D3005-07		MA151K	DIODE	3	<R>
D3202		MA151WA	DIODE	1	<R>
D3203-05		MA151K	DIODE	3	<R>
D3206		MA151WA	DIODE	1	<R>
D3208		MA151K	DIODE	1	<R>
D3402		MA3091-M	DIODE	1	<R>
D3403		MA28W-B	DIODE	1	<R>
D3501		MA151K	DIODE	1	<R>
D3502		MA151WA	DIODE	1	<R>
D3503		MA151K	DIODE	1	<R>

Ref.No.		Part No.	Part Name & Description	Pcs	Remarks
DL3201		VLD0272	DELAY	1	
FL3003		VLF1129	FILTER	1	
FL3005		VLF1127	FILTER	1	
FL3006		VLF1128	FILTER	1	
FL3201		VLF1134	FILTER	1	
FL3202		VLF1133	FILTER	1	
FL3203		VLD0147	DELAY LINE	1	
FL3204		VLF1130	FILTER	1	
FL3205		VLF1131	FILTER	1	
FL3401		VLF1131	FILTER	1	
FL3402		VLD0089	DELAY LINE	1	
FL3403,04		VLF1129	FILTER	2	
FL3405,06		VLF1133	FILTER	2	
FL3501		VLF1132	FILTER	1	
IC3001		TC7S04F	IC	1	<R>
IC3002		AN3293S	IC	1	<R>
IC3003		MSM6871RS	IC	1	<R>
IC3004		AN3255FAP	IC	1	<R>
IC3006-08		NJM2233BMA	IC	3	<R>
IC3009		TC4W53F	IC	1	<R>
IC3011		AN78N05	IC	1	<R>
IC3012		NJM78L05UA	IC	1	<R>
IC3201		M52056FP	IC	1	<R>
IC3205-07		TC7S04F	IC	3	<R>
IC3208,09		TC7S66F	IC	2	<R>
IC3210		TC7S04F	IC	1	<R>
IC3211		MC74HC4053F	IC	1	<R>
IC3212		TK16031M	IC	1	<R>
IC3213		MC14577CP	IC	1	<R>
IC3214,15		NJM78L05UA	IC	2	<R>
IC3401		NJM2233BMA	IC	1	<R>
IC3402		AN3495S	IC	1	<R>
IC3403,04		MSM6871RS	IC	2	<R>
IC3406		M52093SP	IC	1	<R>
IC3407		SN74LS221NS	IC	1	<R>
IC3408		MC14577CP	IC	1	<R>
IC3409		NJM2234MA	IC	1	<R>
IC3410		AN78N05	IC	1	<R>
IC3411		VCR0373	IC	1	<R>
IC3412		NJM2233BMA	IC	1	<R>
IC3501		AN614	IC	1	<R>
IC3502		MC74HC4053F	IC	1	<R>
IC3503		TA75W555FU	IC	1	<R>
IC3504		TA75S393F	IC	1	<R>
IC3506		MC14538BF	IC	1	<R>
IC3507		MC14013BF	IC	1	<R>
IC3508		MC14040BF	IC	1	<R>
IC3509		MC14538BF	IC	1	<R>
IC3510		TC4S30F	IC	1	<R>
IC3511		MC14013BF	IC	1	<R>
IC3512		TC4S30F	IC	1	<R>
L3001		VLQ0163J390	COIL 39UH	1	
L3002		VLQ0319K101	COIL 100UH	1	
L3004		VLQ0319K101	COIL 100UH	1	
L3005		VLP0083	COIL	1	
L3007,08		VLQ0319K101	COIL 100UH	2	
L3011		VLQ0163J151	COIL 150UH	1	
L3201		VLQ0163J470	COIL 47UH	1	
L3202,03		VLQ0163J820	COIL 82UH	2	
L3204		VLQ0163J330	COIL 33UH	1	
L3206		VLQ0319K101	COIL 100UH	1	
L3207		VLQ0163J330	COIL 33UH	1	
L3208		VLQ0163J150	COIL 15UH	1	
L3209-11		VLQ0319K101	COIL 100UH	3	
L3401		VLQ0319K101	COIL 100UH	1	
L3402		VLP0083	COIL	1	

Ref.No.	Part No.	Part Name & Description	Pcs	Remarks
L3403	VLQ0163J680	COIL 68UH	1	
L3404	VLQ0163J151	COIL 150UH	1	
L3405-07	VLQ0319K101	COIL 100UH	3	
L3409,10	VLQ0163J150	COIL 15UH	2	
L3411-13	VLQ0319K101	COIL 100UH	3	
L3415,16	VLQ0163J6R8	COIL 6.8UH	2	
L3501-03	VLQ0319K101	COIL 100UH	3	
L3504	VLQ0163J390	COIL 39UH	1	
P3601,02	VJS2848D018	CONNECTOR (FEMALE) 18P	2	
P3603	VJP1233T	CONNECTOR (MALE) 6P	1	
P3632	VJP3176B064	CONNECTOR (MALE) 64P	1	
Q3002	MSD601-R	TRANSISTOR	1	<R>
Q3003-05	MSC2295-B	TRANSISTOR	3	<R>
Q3006	MSD601-R	TRANSISTOR	1	<R>
Q3007	MSB709-R	TRANSISTOR	1	<R>
Q3008,09	XN4501	TRANSISTOR-RESISTOR	2	<R>
Q3010,11	2SA1022-C	TRANSISTOR	2	<R>
Q3012	MSD601-R	TRANSISTOR	1	<R>
Q3013	MSB709-R	TRANSISTOR	1	<R>
Q3014	MSD601-R	TRANSISTOR	1	<R>
Q3015	MSB709-R	TRANSISTOR	1	<R>
Q3016	MSD601-R	TRANSISTOR	1	<R>
Q3201,02	MSB709-R	TRANSISTOR	2	<R>
Q3203-07	MSD601-R	TRANSISTOR	5	<R>
Q3208,09	MSC2295-B	TRANSISTOR	2	<R>
Q3210	MSB709-R	TRANSISTOR	1	<R>
Q3211	XN1504	TRANSISTOR	1	<R>
Q3212	MSB709-R	TRANSISTOR	1	<R>
Q3401-03	MSD601-R	TRANSISTOR	3	<R>
Q3404-08	MSC2295-B	TRANSISTOR	5	<R>
Q3410	MSB709-R	TRANSISTOR	1	<R>
Q3411	MSC2295-B	TRANSISTOR	1	<R>
Q3501	MSD601-R	TRANSISTOR	1	<R>
Q3502,03	MSB709-R	TRANSISTOR	2	<R>
Q3504	MSC2295-B	TRANSISTOR	1	<R>
Q3601	MSB709-R	TRANSISTOR	1	<R>
Q3602	MSC2295-B	TRANSISTOR	1	<R>
QR3001	MRN1404	TRANSISTOR	1	<R>
QR3003	MRN2403	TRANSISTOR	1	<R>
QR3006	MRN1403	TRANSISTOR	1	<R>
QR3201,02	MRN1403	TRANSISTOR	2	<R>
QR3203	MRN1404	TRANSISTOR	1	<R>
QR3206,07	MRN1404	TRANSISTOR	2	<R>
QR3402,03	MRN1404	TRANSISTOR	2	<R>
QR3500	MRN1403	TRANSISTOR	1	<R>
R3001	ERJ6GEYJ562	M.RESISTOR CH 1/10W 5.6K	1	
R3002-09	ERJ6GEYJ102	M.RESISTOR CH 1/10W 1K	8	
R3010-12	VRE0034E102	M.RESISTOR CH 1/10W 1K	3	
R3013	ERJ6GEYJ152	M.RESISTOR CH 1/10W 1.5K	1	
R3014	VRE0034E112	M.RESISTOR CH 1/10W 1.1K	1	
R3015	ERJ6GEYJ122	M.RESISTOR CH 1/10W 1.2K	1	
R3016	ERJ6GEY0R00	M.RESISTOR CH 1/10W 0	1	
R3017	ERJ6GEYJ101	M.RESISTOR CH 1/10W 100	1	
R3018	ERJ6GEYJ222	M.RESISTOR CH 1/10W 2.2K	1	
R3019	ERJ6GEYJ152	M.RESISTOR CH 1/10W 1.5K	1	
R3020,21	VRE0034E152	M.RESISTOR CH 1/10W 1.5K	2	
R3022	ERJ6GEYG153	M.RESISTOR CH 1/10W 15K	1	
R3023	ERJ6GEYJ392	M.RESISTOR CH 1/10W 3.9K	1	
R3024	ERJ6GEYJ184	M.RESISTOR CH 1/10W 180K	1	
R3026	ERJ6GEYJ225	M.RESISTOR CH 1/10W 2.2M	1	
R3027,28	ERJ6GEYJ222	M.RESISTOR CH 1/10W 2.2K	2	
R3029	ERJ6GEYJ102	M.RESISTOR CH 1/10W 1K	1	
R3030	ERJ6GEYJ223	M.RESISTOR CH 1/10W 22K	1	

Ref.No.	Part No.	Part Name & Description	Pcs	Remarks
R3032	VRE0034E241	M.RESISTOR CH 1/10W 240	1	
R3033	ERJ6GEYJ562	M.RESISTOR CH 1/10W 5.6K	1	
R3034	ERJ6GEYJ332	M.RESISTOR CH 1/10W 3.3K	1	
R3035,36	VRE0034E332	M.RESISTOR CH 1/10W 3.3K	2	
R3037	VRE0034E471	M.RESISTOR CH 1/10W 470	1	
R3039	VRE0034E471	M.RESISTOR CH 1/10W 470	1	
R3040,41	ERJ6GEYJ821	M.RESISTOR CH 1/10W 820	2	
R3042	ERJ6GEYJ822	M.RESISTOR CH 1/10W 8.2K	1	
R3043	ERJ6GEYJ471	M.RESISTOR CH 1/10W 470	1	
R3044	ERJ6GEYJ222	M.RESISTOR CH 1/10W 2.2K	1	
R3045	ERJ6GEYJ122	M.RESISTOR CH 1/10W 1.2K	1	
R3047	ERJ6GEYJ122	M.RESISTOR CH 1/10W 1.2K	1	
R3048	ERJ6GEYJ222	M.RESISTOR CH 1/10W 2.2K	1	
R3050	ERJ6GEYJ103	M.RESISTOR CH 1/10W 10K	1	
R3051	ERJ6GEYJ152	M.RESISTOR CH 1/10W 1.5K	1	
R3052	ERJ6GEYJ103	M.RESISTOR CH 1/10W 10K	1	
R3053	ERJ6GEYJ330	M.RESISTOR CH 1/10W 33	1	
R3054	ERJ6GEYJ471	M.RESISTOR CH 1/10W 470	1	
R3055	ERJ6GEYJ561	M.RESISTOR CH 1/10W 560	1	
R3056	ERJ6GEYJ222	M.RESISTOR CH 1/10W 2.2K	1	
R3057	ERJ6GEY0R00	M.RESISTOR CH 1/10W 0	1	
R3058	ERJ6GEYG153	M.RESISTOR CH 1/10W 15K	1	
R3061	ERJ6GEYJ105	M.RESISTOR CH 1/10W 1M	1	
R3062	ERJ6GEY0R00	M.RESISTOR CH 1/10W 0	1	
R3063,64	ERJ6GEYJ473	M.RESISTOR CH 1/10W 47K	2	
R3066	ERJ6GEY0R00	M.RESISTOR CH 1/10W 0	1	
R3069	ERJ6GEYJ103	M.RESISTOR CH 1/10W 10K	1	
R3070	ERJ6GEYG153	M.RESISTOR CH 1/10W 15K	1	
R3071,72	ERJ6GEYJ682	M.RESISTOR CH 1/10W 6.8K	2	
R3073	ERJ6GEYJ392	M.RESISTOR CH 1/10W 3.9K	1	
R3074	ERJ6GEYJ682	M.RESISTOR CH 1/10W 6.8K	1	
R3075	ERJ6GEYJ681	M.RESISTOR CH 1/10W 680	1	
R3077	ERJ6GEYJ102	M.RESISTOR CH 1/10W 1K	1	
R3078	VRE0034E392	M.RESISTOR CH 1/10W 3.9K	1	
R3079	VRE0034E333	M.RESISTOR CH 1/10W 33K	1	
R3080	ERJ6GEYJ104	M.RESISTOR CH 1/10W 100K	1	
R3081	ERJ6GEYJ561	M.RESISTOR CH 1/10W 560	1	
R3082	ERJ6GEYJ471	M.RESISTOR CH 1/10W 470	1	
R3083	ERJ6GEYJ102	M.RESISTOR CH 1/10W 1K	1	
R3084	ERJ6GEYJ391	M.RESISTOR CH 1/10W 390	1	
R3085	VRE0034E333	M.RESISTOR CH 1/10W 33K	1	
R3086	VRE0034E153	M.RESISTOR CH 1/10W 15K	1	
R3087	VRE0034E223	M.RESISTOR CH 1/10W 22K	1	
R3088,89	ERJ6GEYJ681	M.RESISTOR CH 1/10W 680	2	
R3090	ERJ6GEYJ102	M.RESISTOR CH 1/10W 1K	1	
R3091	ERJ6GEYJ471	M.RESISTOR CH 1/10W 470	1	
R3092	ERJ6GEYJ331	M.RESISTOR CH 1/10W 330	1	
R3093-95	ERJ6GEYJ681	M.RESISTOR CH 1/10W 680	3	
R3096	ERJ6GEYJ621	M.RESISTOR CH 1/10W 620	1	
R3097	ERJ6GEYJ101	M.RESISTOR CH 1/10W 100	1	
R3098	ERJ6GEYJ681	M.RESISTOR CH 1/10W 680	1	
R3099	ERJ6GEY0R00	M.RESISTOR CH 1/10W 0	1	
R3102	VRE0034E333	M.RESISTOR CH 1/10W 33K	1	
R3103	VRE0034E112	M.RESISTOR CH 1/10W 1.1K	1	
R3104	ERJ6GEYJ103	M.RESISTOR CH 1/10W 10K	1	
R3105	VRE0034E183	M.RESISTOR CH 1/10W 18K	1	
R3107	ERJ6GEYG472	M.RESISTOR CH 1/10W 4.7K	1	
R3113	ERJ6GEYJ471	M.RESISTOR CH 1/10W 470	1	
R3114	ERJ6GEYJ221	M.RESISTOR CH 1/10W 220	1	
R3115	ERJ6GEYJ102	M.RESISTOR CH 1/10W 1K	1	
R3201,02	ERJ6GEYJ562	M.RESISTOR CH 1/10W 5.6K	2	
R3203	ERJ6GEYJ101	M.RESISTOR CH 1/10W 100	1	
R3205	ERJ6GEYJ223	M.RESISTOR CH 1/10W 22K	1	
R3206	ERJ6GEYJ103	M.RESISTOR CH 1/10W 10K	1	
R3208	ERJ6GEY0R00	M.RESISTOR CH 1/10W 0	1	
R3209,10	ERJ6GEYJ223	M.RESISTOR CH 1/10W 22K	2	
R3211	ERJ6GEYG153	M.RESISTOR CH 1/10W 15K	1	
R3212	ERJ6GEYJ101	M.RESISTOR CH 1/10W 100	1	
R3214,15	ERJ6GEYJ102	M.RESISTOR CH 1/10W 1K	2	
R3216	ERJ6GEYJ103	M.RESISTOR CH 1/10W 10K	1	
R3218	ERJ6GEYJ563	M.RESISTOR CH 1/10W 56K	1	
R3219	ERJ6GEYJ182	M.RESISTOR CH 1/10W 1.8K	1	
R3220	ERJ6GEYJ103	M.RESISTOR CH 1/10W 10K	1	
R3221	ERJ6GEYJ822	M.RESISTOR CH 1/10W 8.2K	1	
R3222	ERJ6GEYG153	M.RESISTOR CH 1/10W 15K	1	

Ref.No.	Part No.	Part Name & Description	Pcs	Remarks
R3223	ERJ6GEYJ182	M.RESISTOR CH 1/10W 1.8K	1	
R3224	ERJ6GEYJ103	M.RESISTOR CH 1/10W 10K	1	
R3225	ERJ6GEYJ512	M.RESISTOR CH 1/10W 5.1K	1	
R3226	ERJ6GEYJ393	M.RESISTOR CH 1/10W 39K	1	
R3227,28	ERJ6GEYJ223	M.RESISTOR CH 1/10W 22K	2	
R3229	ERJ6GEYJ122	M.RESISTOR CH 1/10W 1.2K	1	
R3230	ERJ6GEYJ102	M.RESISTOR CH 1/10W 1K	1	
R3231,32	ERJ6GEYJ103	M.RESISTOR CH 1/10W 10K	2	
R3233	ERJ6GEYG333	M.RESISTOR CH 1/10W 33K	1	
R3234,35	ERJ6GEYJ223	M.RESISTOR CH 1/10W 22K	2	
R3236-39	ERJ6GEYJ102	M.RESISTOR CH 1/10W 1K	4	
R3240	ERJ6GEYJ223	M.RESISTOR CH 1/10W 22K	1	
R3241,42	ERJ6GEYJ102	M.RESISTOR CH 1/10W 1K	2	
R3243	ERJ6GEYJ332	M.RESISTOR CH 1/10W 3.3K	1	
R3244	ERJ6GEYJ473	M.RESISTOR CH 1/10W 47K	1	
R3245,46	ERJ6GEYJ561	M.RESISTOR CH 1/10W 560	2	
R3247	ERJ6GEYG472	M.RESISTOR CH 1/10W 4.7K	1	
R3249	ERJ6GEYJ562	M.RESISTOR CH 1/10W 5.6K	1	
R3250	ERJ6GEYJ103	M.RESISTOR CH 1/10W 10K	1	
R3251	ERJ6GEYJ220	M.RESISTOR CH 1/10W 22	1	
R3252	ERJ6GEYG472	M.RESISTOR CH 1/10W 4.7K	1	
R3253	ERJ6GEYJ271	M.RESISTOR CH 1/10W 270	1	
R3254	ERJ6GEYJ182	M.RESISTOR CH 1/10W 1.8K	1	
R3255,56	ERJ6GEYJ102	M.RESISTOR CH 1/10W 1K	2	
R3262,63	ERJ6GEYJ102	M.RESISTOR CH 1/10W 1K	2	
R3264	ERJ6GEYJ332	M.RESISTOR CH 1/10W 3.3K	1	
R3265	ERJ6GEYJ152	M.RESISTOR CH 1/10W 1.5K	1	
R3266	ERJ6GEYG153	M.RESISTOR CH 1/10W 15K	1	
R3267	ERJ6GEYJ223	M.RESISTOR CH 1/10W 22K	1	
R3268	ERJ6GEYJ183	M.RESISTOR CH 1/10W 18K	1	
R3269,70	ERJ6GEYJ102	M.RESISTOR CH 1/10W 1K	2	
R3271,72	ERJ6GEYJ392	M.RESISTOR CH 1/10W 3.9K	2	
R3273	ERJ6GEYJ102	M.RESISTOR CH 1/10W 1K	1	
R3274,75	ERJ6GEYG472	M.RESISTOR CH 1/10W 4.7K	2	
R3276	ERJ6GEYJ511	M.RESISTOR CH 1/10W 510	1	
R3277	ERJ6GEYJ102	M.RESISTOR CH 1/10W 1K	1	
R3278	ERJ6GEYG472	M.RESISTOR CH 1/10W 4.7K	1	
R3279,80	ERJ6GEYJ102	M.RESISTOR CH 1/10W 1K	2	
R3281	ERJ6GEYJ471	M.RESISTOR CH 1/10W 470	1	
R3282	ERJ6GEYJ681	M.RESISTOR CH 1/10W 680	1	
R3284	ERJ6GEYJ223	M.RESISTOR CH 1/10W 22K	1	
R3285	ERJ6GEYJ101	M.RESISTOR CH 1/10W 100	1	
R3286	ERJ6GEYJ104	M.RESISTOR CH 1/10W 100K	1	
R3287,88	ERJ6GEYJ103	M.RESISTOR CH 1/10W 10K	2	
R3289	ERJ6GEYJ473	M.RESISTOR CH 1/10W 47K	1	
R3290	ERJ6GEY0R00	M.RESISTOR CH 1/10W 0	1	
R3291	ERJ6GEYG333	M.RESISTOR CH 1/10W 33K	1	
R3292,93	ERJ6GEYJ223	M.RESISTOR CH 1/10W 22K	2	
R3295	ERJ6GEYJ102	M.RESISTOR CH 1/10W 1K	1	
R3297	ERJ6GEYJ392	M.RESISTOR CH 1/10W 3.9K	1	
R3298	ERJ6GEYJ562	M.RESISTOR CH 1/10W 5.6K	1	
R3299,00	ERJ6GEYJ103	M.RESISTOR CH 1/10W 10K	2	
R3301	ERJ6GEYG333	M.RESISTOR CH 1/10W 33K	1	
R3302	ERJ6GEYJ102	M.RESISTOR CH 1/10W 1K	1	
R3400	ERJ6GEYJ103	M.RESISTOR CH 1/10W 10K	1	
R3401	ERJ6GEYJ102	M.RESISTOR CH 1/10W 1K	1	
R3402	ERDS2T0	C.RESISTOR 1/4W 0	1	
R3403,04	ERJ6GEYJ102	M.RESISTOR CH 1/10W 1K	2	
R3405	ERJ6GEYJ122	M.RESISTOR CH 1/10W 1.2K	1	
R3407	ERJ6GEYG472	M.RESISTOR CH 1/10W 4.7K	1	
R3408	ERJ6GEYJ331	M.RESISTOR CH 1/10W 330	1	
R3409	ERJ6GEY0R00	M.RESISTOR CH 1/10W 0	1	
R3410	ERJ6GEYG333	M.RESISTOR CH 1/10W 33K	1	
R3411	ERJ6GEYJ562	M.RESISTOR CH 1/10W 5.6K	1	
R3412	ERJ6GEYG153	M.RESISTOR CH 1/10W 15K	1	
R3413	ERJ6GEYG333	M.RESISTOR CH 1/10W 33K	1	
R3414	ERJ6GEYJ223	M.RESISTOR CH 1/10W 22K	1	
R3415	ERJ6GEYJ271	M.RESISTOR CH 1/10W 270	1	
R3416	ERJ6GEYJ273	M.RESISTOR CH 1/10W 27K	1	
R3417	ERJ6GEYJ681	M.RESISTOR CH 1/10W 680	1	
R3418	ERJ6GEYJ122	M.RESISTOR CH 1/10W 1.2K	1	
R3419	ERJ6GEYJ152	M.RESISTOR CH 1/10W 1.5K	1	
R3420	ERJ6GEYJ102	M.RESISTOR CH 1/10W 1K	1	
R3421	ERJ6GEYJ103	M.RESISTOR CH 1/10W 10K	1	
R3422	ERJ6GEYJ223	M.RESISTOR CH 1/10W 22K	1	

Ref.No.	Part No.	Part Name & Description	Pcs	Remarks
R3423	ERJ6GEYJ681	M.RESISTOR CH 1/10W 680	1	
R3424	ERJ6GEYJ122	M.RESISTOR CH 1/10W 1.2K	1	
R3425	ERJ6GEYJ223	M.RESISTOR CH 1/10W 22K	1	
R3426-28	ERJ6GEYJ102	M.RESISTOR CH 1/10W 1K	3	
R3429	ERJ6GEYJ101	M.RESISTOR CH 1/10W 100	1	
R3430	ERJ6GEYJ222	M.RESISTOR CH 1/10W 2.2K	1	
R3431	ERJ6GEYJ103	M.RESISTOR CH 1/10W 10K	1	
R3432	ERJ6GEYJ183	M.RESISTOR CH 1/10W 18K	1	
R3433	ERJ6GEYJ272	M.RESISTOR CH 1/10W 2.7K	1	
R3434	ERJ6GEYJ561	M.RESISTOR CH 1/10W 560	1	
R3435-37	ERJ6GEYJ222	M.RESISTOR CH 1/10W 2.2K	3	
R3438	ERJ6GEYG472	M.RESISTOR CH 1/10W 4.7K	1	
R3439	ERJ6GEYJ392	M.RESISTOR CH 1/10W 3.9K	1	
R3440	ERJ6GEYG472	M.RESISTOR CH 1/10W 4.7K	1	
R3441	ERJ6GEY0R00	M.RESISTOR CH 1/10W 0	1	
R3445,46	ERJ6GEYJ102	M.RESISTOR CH 1/10W 1K	2	
R3449	ERJ6GEYG472	M.RESISTOR CH 1/10W 4.7K	1	
R3450,51	ERJ6GEYJ103	M.RESISTOR CH 1/10W 10K	2	
R3452	ERJ6GEYJ223	M.RESISTOR CH 1/10W 22K	1	
R3455	ERJ6GEYJ824	M.RESISTOR CH 1/10W 820K	1	
R3457,58	ERJ6GEYJ331	M.RESISTOR CH 1/10W 330	2	
R3460	ERJ6GEYJ124	M.RESISTOR CH 1/10W 120K	1	
R3461	ERJ6GEYJ824	M.RESISTOR CH 1/10W 820K	1	
R3462	ERJ6GEYJ102	M.RESISTOR CH 1/10W 1K	1	
R3463	ERJ6GEYJ471	M.RESISTOR CH 1/10W 470	1	
R3465	ERJ6GEYJ471	M.RESISTOR CH 1/10W 470	1	
R3467	ERJ6GEYJ102	M.RESISTOR CH 1/10W 1K	1	
R3468	ERJ6GEYJ222	M.RESISTOR CH 1/10W 2.2K	1	
R3470	ERJ6GEYJ331	M.RESISTOR CH 1/10W 330	1	
R3471	ERJ6GEYJ103	M.RESISTOR CH 1/10W 10K	1	
R3472	ERJ6GEYJ681	M.RESISTOR CH 1/10W 680	1	
R3473	ERJ6GEYJ103	M.RESISTOR CH 1/10W 10K	1	
R3474	ERJ6GEYG333	M.RESISTOR CH 1/10W 33K	1	
R3475	ERJ6GEYJ102	M.RESISTOR CH 1/10W 1K	1	
R3476	ERJ6GEY0R00	M.RESISTOR CH 1/10W 0	1	
R3477-79	ERJ6GEYJ102	M.RESISTOR CH 1/10W 1K	3	
R3484	ERJ6GEYJ102	M.RESISTOR CH 1/10W 1K	1	
R3485	ERJ6GEYG153	M.RESISTOR CH 1/10W 15K	1	
R3486	ERJ6GEYJ223	M.RESISTOR CH 1/10W 22K	1	
R3487	ERJ6GEYJ471	M.RESISTOR CH 1/10W 470	1	
R3488	ERJ6GEYJ221	M.RESISTOR CH 1/10W 220	1	
R3489	ERJ6GEYJ821	M.RESISTOR CH 1/10W 820	1	
R3490	ERJ6GEYJ223	M.RESISTOR CH 1/10W 22K	1	
R3491	ERJ6GEYJ183	M.RESISTOR CH 1/10W 18K	1	
R3492,93	VRE0034E681	M.RESISTOR CH 1/10W 680	2	
R3494	VRE0034E122	M.RESISTOR CH 1/10W 1.2K	1	
R3495	VRE0034E201	M.RESISTOR CH 1/10W 200	1	
R3496	ERJ6GEYJ152	M.RESISTOR CH 1/10W 1.5K	1	
R3498,99	ERJ6GEYJ101	M.RESISTOR CH 1/10W 100	2	
R3501	ERJ6GEYG472	M.RESISTOR CH 1/10W 4.7K	1	
R3502	ERJ6GEY0R00	M.RESISTOR CH 1/10W 0	1	
R3503	ERJ6GEYG472	M.RESISTOR CH 1/10W 4.7K	1	
R3504	ERJ6GEYJ152	M.RESISTOR CH 1/10W 1.5K	1	
R3506	ERJ6GEYJ103	M.RESISTOR CH 1/10W 10K	1	
R3507	ERJ6GEYJ102	M.RESISTOR CH 1/10W 1K	1	
R3508	ERJ6GEYJ222	M.RESISTOR CH 1/10W 2.2K	1	
R3509	ERJ6GEYJ103	M.RESISTOR CH 1/10W 10K	1	
R3510	ERJ6GEYG472	M.RESISTOR CH 1/10W 4.7K	1	
R3511,12	ERJ6GEYJ102	M.RESISTOR CH 1/10W 1K	2	
R3513	ERJ6GEYJ223	M.RESISTOR CH 1/10W 22K	1	
R3514	ERJ6GEYJ103	M.RESISTOR CH 1/10W 10K	1	
R3515	ERJ6GEYJ912	M.RESISTOR CH 1/10W 9.1K	1	
R3516	ERJ6GEYJ104	M.RESISTOR CH 1/10W 100K	1	
R3517	ERJ6GEYJ103	M.RESISTOR CH 1/10W 10K	1	
R3518	ERJ6GEYJ273	M.RESISTOR CH 1/10W 27K	1	
R3519	ERJ6GEYJ105	M.RESISTOR CH 1/10W 1M	1	
R3520,21	ERJ6GEYJ103	M.RESISTOR CH 1/10W 10K	2	
R3529	ERJ6GEYJ103	M.RESISTOR CH 1/10W 10K	1	
R3530	ERJ6GEYG153	M.RESISTOR CH 1/10W 15K	1	
R3531	ERJ6GEYJ433	M.RESISTOR CH 1/10W 43K	1	
R3532	ERJ6GEYJ473	M.RESISTOR CH 1/10W 47K	1	
R3533	ERJ6GEYJ224	M.RESISTOR CH 1/10W 220K	1	
R3534	ERJ6GEYJ124	M.RESISTOR CH 1/10W 120K	1	
R3536	ERJ6GEYJ222	M.RESISTOR CH 1/10W 2.2K	1	
R3537	ERJ6GEYJ152	M.RESISTOR CH 1/10W 1.5K	1	

Ref.No.	Part No.	Part Name & Description	Pcs	Remarks
R3538	ERJ6GEYJ102	M.RESISTOR CH 1/10W 1K	1	
R3540	ERJ6GEYJ683	M.RESISTOR CH 1/10W 68K	1	
R3541	ERJ6GEYJ272	M.RESISTOR CH 1/10W 2.7K	1	
R3542	ERJ6GEYJ683	M.RESISTOR CH 1/10W 68K	1	
R3543	ERJ6GEYJ272	M.RESISTOR CH 1/10W 2.7K	1	
R3544	ERJ6GEYJ331	M.RESISTOR CH 1/10W 330	1	
R3545,46	ERJ6GEYJ222	M.RESISTOR CH 1/10W 2.2K	2	
R3547	ERJ6GEYJ223	M.RESISTOR CH 1/10W 22K	1	
R3548	ERJ6GEYJ104	M.RESISTOR CH 1/10W 100K	1	
R3549	ERJ6GEYJ563	M.RESISTOR CH 1/10W 56K	1	
R3550	ERJ6GEY0R00	M.RESISTOR CH 1/10W 0	1	
R3551	ERJ6GEYJ561	M.RESISTOR CH 1/10W 560	1	
R3601	ERJ6GEYJ332	M.RESISTOR CH 1/10W 3.3K	1	
R3602	ERJ6GEYJ222	M.RESISTOR CH 1/10W 2.2K	1	
R3603	ERJ6GEYJ102	M.RESISTOR CH 1/10W 1K	1	
R3604	ERJ6GEYJ681	M.RESISTOR CH 1/10W 680	1	
R3605	ERJ6GEYJ331	M.RESISTOR CH 1/10W 330	1	
R3606	ERJ6GEYJ103	M.RESISTOR CH 1/10W 10K	1	
R3607	ERJ6GEYG333	M.RESISTOR CH 1/10W 33K	1	
R3608	ERJ6GEYJ221	M.RESISTOR CH 1/10W 220	1	
R3609	ERJ6GEYJ222	M.RESISTOR CH 1/10W 2.2K	1	
R3611	ERJ6GEYJ122	M.RESISTOR CH 1/10W 1.2K	1	
R3612	ERJ6GEYJ182	M.RESISTOR CH 1/10W 1.8K	1	
R3614	ERJ6GEY0R00	M.RESISTOR CH 1/10W 0	1	
R3615	ERJ6GEYJ222	M.RESISTOR CH 1/10W 2.2K	1	
R3616	ERJ6GEYJ102	M.RESISTOR CH 1/10W 1K	1	
TH3401-03	ERTD2FHL102S	THERMISTOR 1K	3	
VC3201	ECV1ZW60X60	TRIMMER	1	
VC3202	ECV1ZW20X60	V.CAPACITOR 20P	1	
VR3001,02	EVN32CA00B53	V.RESISTOR 5K	2	
VR3003	EVM7JGA00B13	V.RESISTOR 1K	1	
VR3004,05	EVN32CA00B53	V.RESISTOR 5K	2	
VR3006	EVM7DGA00B52	V.RESISTOR 500	1	
VR3007	EVM7DGA00B53	V.RESISTOR 5K	1	
VR3201,02	EVN32CA00B15	V.RESISTOR 100K	2	
VR3203	EVN32CA00B24	VARIABLE 20K	1	
VR3206	EVM7DGA00B14	V.RESISTOR 10K	1	
VR3207	EVM7DGA00B24	V.RESISTOR 20K	1	
VR3401-03	EVM7JGA00B13	V.RESISTOR 1K	3	
VR3404	EVN32CA00B13	V.RESISTOR 1K	1	
VR3405	EVM7DGA00B13	V.RESISTOR 1K	1	
VR3406	EVM7DGA00B54	V.RESISTOR 50K	1	
VR3407	EVM7DGA00B23	V.RESISTOR 2K	1	
VR3408	EVM7DGA00B54	V.RESISTOR 50K	1	
VR3410	EVN32CA00B54	V.RESISTOR 50K	1	
X3201	VSX0406	CRYSTAL OSCILLATOR	1	<R>
X3401	VSX0316	CRYSTAL OSCILLATOR	1	<R>
		MISCELLANEOUS		
E48	VMZ2228	INSULATER	1	
E49	VSC3973	SHIELD PLATE	1	
E50	XTV3+6FFR	SCREW	2	

Ref.No.	Part No.	Part Name & Description	Pcs	Remarks
	VEP04328A	P.C.BOARD W/COMPONENT		AG-8700E
		AUDIO METER		
D4201-06	LN440YCPUVT1	DIODE	6	<R>
D4207,08	MA165VT	DIODE	2	<R>
P4201	VJP3081	CONNECTOR (MALE)	1	
R4201,02	ERDS2TJ151	C.RESISTOR 1/4W 150	2	
R4203	ERDS2TJ222	C.RESISTOR 1/4W 2.2K	1	
R4204	ERDS2TJ272	C.RESISTOR 1/4W 2.7K	1	
R4205	ERDS2TJ222	C.RESISTOR 1/4W 2.2K	1	
R4206	ERDS2TJ272	C.RESISTOR 1/4W 2.7K	1	
R4207,08	ER0S2CKG5100	M.RESISTOR 1/4W 510	2	
R4209,10	ERDS2TJ151	C.RESISTOR 1/4W 150	2	
VR4201-04	EVJ9MA040B14	V.RESISTOR	4	
		MISCELLANEOUS		
E54	VMP3282	METER ANGLE	1	
E55	VGF0245	METER HOLDER	2	
E56	VSE0117	METER	1	
E57	VSE0115	AUDIO METER	1	

Ref.No.		Part No.	Part Name & Description	Pcs	Remarks
		VEP04418C	P.C.BOARD W/COMPONENT		AG-8700E
			FRONT JACK		
C4901,02		ECKF1H101KB	C.CAPACITOR 50V 100P	2	
C4910		ECKF1H103ZF	C.CAPACITOR 50V 0.01U	1	
D4901		MA165VT	DIODE	1	<R>
J4901		VJJ0378	M6 JACK	1	
L4901,02		VLQEL05S101J	COIL 100UH	2	
P4901		VJP3529	CONNECTOR	1	
P4902		VJP3076	CONNECTOR	1	
R4901		ERDS2TJ333	C.RESISTOR 1/4W 33K	1	
R4902		ERDS2TJ822	C.RESISTOR 1/4W 8.2K	1	
VR4901		EVUNCAF15B23	V.RESISTOR	1	
VR4902		EVU55AF15B15	V.RESISTOR	1	
VR4903		EVU023015B14	V.RESISTOR	1	
			MISCELLANEOUS		
E59		VMP4231	JACK ANGLE	1	
E60		VGU6484	BUTTON	4	
E61		VMP4434	FRONT JACK ANGLE (2)	1	

Ref.No.		Part No.	Part Name & Description	Pcs	Remarks
		VEP04418D	P.C.BOARD W/COMPONENT		AG-8600E
			FRONT JACK		
C4901,02		ECKF1H101KB	C.CAPACITOR 50V 100P	2	
C4910		ECKF1H103ZF	C.CAPACITOR 50V 0.01U	1	
J4901		VJJ0378	M6 JACK	1	
L4901,02		VLQEL05S101J	COIL 100UH	2	
P4901		VJP3529	CONNECTOR	1	
P4902		VJP3076	CONNECTOR	1	
VR4901		EVUNCAF15B23	V.RESISTOR	1	
VR4902		EVU55AF15B15	V.RESISTOR	1	
			MISCELLANEOUS		
E59		VMP4231	JACK ANGLE	1	
E60		VGU6484	BUTTON	3	
E61		VMP4434	FRONT JACK ANGLE (2)	1	

Ref.No.		Part No.	Part Name & Description	Pcs	Remarks
		VEP01609B	P.C.BOARD W/COMPONENT		
			POWER		
C1001,02		VCK0260M332	P.CAPACITOR 50V 3300P	2	<!>
C1003		ECQU2A224MN	P.CAPACITOR 250V 0.22U	1	<!>
C1004,05		VCK0260M102	P.CAPACITOR 50V	2	<!>
C1008		ECEC2GA221C	E.CAPACITOR 400V 220U	1	
C1009		ECA1CFZ221L	E.CAPACITOR 16V 220U	1	
C1011		ECA1HFZ470	E.CAPACITOR 50V 47U	1	
C1012		ECQB1H681JF	P.CAPACITOR 50V 680P	1	
C1013		ECQE6473MZ	P.CAPACITOR 630V 0.047U	1	
C1014		VCK0106K331	P.CAPACITOR 50V 330P	1	
C1015		ECQB1H223JF	P.CAPACITOR 50V 0.022U	1	
C1016		ECQB1H123JF	P.CAPACITOR 50V 0.012U	1	
C1017		ECQV1H274JZ	P.CAPACITOR 50V 0.27U	1	
C1019		ECA1HXLV2R2	E.CAPACITOR 50V 2.2U	1	
C1025		ECEA1JFE560	E.CAPACITOR 63V 56U	1	
C1026		ECA1VFQ681	E.CAPACITOR 35V 680U	1	
C1027		ECA1EFZ122	E.CAPACITOR 25V 1200U	1	
C1028,29		ECA1AFZ222	E.CAPACITOR 10V 2200U	2	
C1030		ECA1CFZ821	E.CAPACITOR 16V 820U	1	
C1031		ECA1EFZ331	E.CAPACITOR 25V 330U	1	
C1032		ECQB1H473JF	P.CAPACITOR 50V 0.047U	1	
C1033		ECKF1H103ZF	C.CAPACITOR 50V 0.01U	1	
C1034		ECA1CXLV470	E.CAPACITOR 16V 47U	1	
C1035		ECA1CFQ152	E.CAPACITOR 16V 1500U	1	
C1036		ECQV1H564JZ	P.CAPACITOR 50V 0.56U	1	
C1037-39		ECCD2H101J	C.CAPACITOR 500V 100P	3	
D1001		D3SBA60	DIODE	1	<R><!>
D1002		RD62E	DIODE	1	<R>
D1003		ERA22-02	DIODE	1	<R>
D1004		MA723	DIODE	1	<R>
D1005		MA185	DIODE	1	<R>
D1006		MA165VT	DIODE	1	<R>
D1007		MA185	DIODE	1	<R>
D1008		MA4100M	DIODE	1	<R>
D1009		MA178	DIODE	1	<R>
D1010		AP01C	DIODE	1	<R>
D1011,12		RD91E	DIODE	2	<R>
D1014		8P4SMA	DIODE	1	<R>
D1015		RD62E	DIODE	1	<R>
D1016		VSD0001	DIODE	1	<R>
D1017,18		FMLG12SP	DIODE	2	<R>
D1019		FMB-24H	DIODE	1	<R>
D1020		31DQ04	DIODE	1	<R>
D1021		RL2ZP	DIODE	1	<R>
F1001		XBA2C31TH15	FUSE	1	<!>
IC1001		STRS6708LF	IC	1	<R><!>
IC1002		TL431CLP	IC	1	<R>
IC1003		M51953BL	IC	1	<R>
L1001		ELF18D606F	COIL	1	<!>
L1006		VLQ0354	COIL	1	
L1007		VLQ0410	COIL	1	
L1008		VLQ0605	COIL	1	
L1009		VLQ0410	COIL	1	
P1001		VJP2639	CONNECTOR	1	
P1002		VJP1153	CONNECTOR (MALE)	1	

Ref.No.		Part No.	Part Name & Description	Pcs	Remarks
P1003		VJP3088	CONNECTOR	1	
Q1001-03		2SD636	TRANSISTOR	3	<R>
Q1004		PS2561L1V1WL	TRANSISTOR-PHOTO COUPLER	1	<R><!>
Q1006		2SD1474	TRANSISTOR	1	<R>
QR1001		UN1114	TRANSISTOR-RESISTOR	1	<R>
QR1002		UN1214	TRANSISTOR-RESISTOR	1	<R>
R1001		VSF0078	F.RESISTOR	1	<!>
R1002-05		ERDS2FJ683	C.RESISTOR 1/4W 68K	4	
R1006		ERDS2FJ2R7	C.RESISTOR 1/4W 2.7	1	
R1007		ERDS2FJ270	C.RESISTOR 1/4W 27	1	
R1009		ERDS2FJ1R5	C.RESISTOR 1/4W 1.5	1	
R1010		ERX2SJR43	M.RESISTOR 2W 0.43	1	
R1011		ERDS2FJ562	C.RESISTOR 1/4W 5.6K	1	
R1012		ERDS2FJ822	C.RESISTOR 1/4W 8.2K	1	
R1013		ERDS2FJ471	C.RESISTOR 1/4W 470	1	
R1014		ERDS2FJ331	C.RESISTOR 1/4W 330	1	
R1015		ERDS2FJ104	C.RESISTOR 1/4W 100K	1	
R1016		ERDS2FJ103	C.RESISTOR 1/4W 10K	1	
R1017		ERDS2FJ104	C.RESISTOR 1/4W 100K	1	
R1018		ERDS2FJ473	C.RESISTOR 1/4W 47K	1	
R1019,20		ERDS2FJ224	C.RESISTOR 1/4W 220K	2	
R1021		ERG3SJ683	M.RESISTOR 3W 68K	1	
R1022		ERG1SJ561	M.RESISTOR 1W 560	1	
R1023		ERDS2FJ562	C.RESISTOR 1/4W 5.6K	1	
R1024		ERDS2FJ334	C.RESISTOR 1/4W 330K	1	
R1025		ERDS2T0	C.RESISTOR 1/4W 0	1	
R1027,28		ERDS2FJ683	C.RESISTOR 1/4W 68K	2	
R1031		ERDS2TJ271	C.RESISTOR 1/4W 270	1	
R1032		ERDS2TJ561	C.RESISTOR 1/4W 560	1	
R1033		ERDS2T0	C.RESISTOR 1/4W 0	1	
R1034		EROS2CKF2701	M.RESISTOR 1/4W	1	
R1035		EROS2CKF2201	M.RESISTOR 1/4W 2.2K	1	
R1036		EROS2CKG6202	M.RESISTOR 1/4W 62K	1	
R1038		ERX3SJR82	M.RESISTOR 3W 0.82	1	
T1001		VLT0739	TRANSFORMER	1	<!>
			MISCELLANEOUS		
E35		VJF0318	FUSE HOLDER	2	<!>
E36		VMZ0429	FUSE COVER	1	<!>
E37		VMZ0965	CAPACITOR COVER	2	<!>
E44		VMZ1798	BARRIER	1	<!>
E45		VMZ1608	CAPACITOR COVER	2	<!>
E51		VSC3434	SHIELD CASE	1	
E52		XYN3+F8	SCREW	1	

Ref.No.		Part No.	Part Name & Description	Pcs	Remarks
		VEP00V07C	P.C.BOARD W/COMPONENT		AG-8700E
			MOTHER		
P910		VJP1147	CONNECTOR (MALE) 12P	1	
P921-23		VJP3203A020Z	CONNECTOR (MALE) 20P	3	
P931		VJS2898A100	CONNECTOR	1	
P932		VJS2898A064	CONNECTOR (FEMALE) 64P	1	
P933-35		VJS2898A100	CONNECTOR	3	
P941,42		VJS2898A064	CONNECTOR (FEMALE) 64P	2	
P961-64		VJS3152	CONNECTOR (FEMALE)	4	
P971-74		VJS3490A13	CONNECTOR	4	
			MISCELLANEOUS		
E38		VMP4222	CONNECTOR ANGLE (1)	1	
E39		VMP4223	CONNECTOR ANGLE (2)	1	
E42		VJF0456	BINDER	2	
E41		XYE3+EF8FZ	SCREW	17	
		VMT0076	RUBBER CUSHION	4	
E40		XTV26+8J	SCREW	14	
		VEP00V07D	P.C.BOARD W/COMPONENT		AG-8600E
			MOTHER		
P910		VJP1147	CONNECTOR (MALE) 12P	1	
P921-23		VJP3203A020Z	CONNECTOR (MALE) 20P	3	
P931		VJS2898A100	CONNECTOR	1	
P932		VJS2898A064	CONNECTOR (FEMALE) 64P	1	
P933-35		VJS2898A100	CONNECTOR	3	
P941,42		VJS2898A064	CONNECTOR (FEMALE) 64P	2	
P961-64		VJS3152	CONNECTOR (FEMALE)	4	
P971-74		VJS3490A13	CONNECTOR	4	
			MISCELLANEOUS		
E38		VMP4222	CONNECTOR ANGLE (1)	1	
E39		VMP4223	CONNECTOR ANGLE (2)	1	
E42		VJF0456	BINDER	2	
E41		XYE3+EF8FZ	SCREW	17	
		VMT0076	RUBBER CUSHION	4	
E40		XTV26+8J	SCREW	14	

Ref.No.		Part No.	Part Name & Description	Pcs	Remarks
		VEP01478C	P.C.BOARD W/COMPONENT		
			POWER CONNECT		
C1101,02		ECQU2A224MN	P.CAPACITOR 250V 0.22U	2	<!>
L1101		ELF18D605	COIL	1	<!>
P1101		VJP2638	CONNECTOR (MALE)	1	<!>
P1102		VJS2985	CONNECTOR	1	<!>
R1101		ERC12GM334	S.RESISTOR 1/2W 330K	1	<!>
			MISCELLANEOUS		
E46		VMZ1305	CAPACITOR COVER	2	<!>

Ref.No.	Part No.	Part Name & Description	Pcs	Remarks
	VEP02417B	P.C.BOARD W/COMPONENT		
		REEL DRIVE		
C2701	ECQV1H104JZ	P.CAPACITOR 50V 0.1U	1	
C2702	ECEA1EKA470	E.CAPACITOR 25V 47U	1	
C2703	ECEA0JKA470	E.CAPACITOR 6.3V 47U	1	
C2704	ECUM1H333KBN	C.CAPACITOR CH 50V 0.033U	1	
C2705	ECQV1H564JZ	P.CAPACITOR 50V 0.56U	1	
C2706-08	ECEA1HKA2R2	E.CAPACITOR 50V 2.2U	3	
C2709-12	ECUM1H333KBN	C.CAPACITOR CH 50V 0.033U	4	
C2713	ECEA0JKA470	E.CAPACITOR 6.3V 47U	1	
C2714	ECEA0JKA101	E.CAPACITOR 6.3V 100U	1	
C2715-17	ECEA0JKA470	E.CAPACITOR 6.3V 47U	3	
C2718	ECQV1H104JZ	P.CAPACITOR 50V 0.1U	1	
C2719	ECEA1EKA470	E.CAPACITOR 25V 47U	1	
C2720	ECEA0JKA470	E.CAPACITOR 6.3V 47U	1	
C2721	ECUM1H333KBN	C.CAPACITOR CH 50V 0.033U	1	
C2722	ECQV1H564JZ	P.CAPACITOR 50V 0.56U	1	
C2723-25	ECEA1HKA2R2	E.CAPACITOR 50V 2.2U	3	
C2726-29	ECUM1H333KBN	C.CAPACITOR CH 50V 0.033U	4	
D2701	MA151K	DIODE	1	<R>
D2702	MA151WK	DIODE	1	<R>
D2703	MA151K	DIODE	1	<R>
D2704	MA153	DIODE	1	<R>
D2705	MA151K	DIODE	1	<R>
D2706	MA151WK	DIODE	1	<R>
D2707	MA151K	DIODE	1	<R>
D2708	MA153	DIODE	1	<R>
IC2701,02	XRA6435S	IC	2	<R>
IC2703	LM358PS	IC	1	<R>
IC2704	MC14053BF	IC	1	<R>
IC2705	LM339NS	IC	1	<R>
IC2706	LM358PS	IC	1	<R>
J2701	ERJ6GEY0R00	M.RESISTOR CH 1/10W 0	1	
L2701-04	VLQ0460	COIL	4	
P2701	VJS3135	CONNECTOR (FEMALE)	1	
P2702	VJS2149W	CONNECTOR (FEMALE)	1	
P2703	VJS3202B008	CONNECTOR (FEMALE) 8P	1	
P2704,05	VJS1412	CONNECTOR (FEMALE)	2	
Q2701	MSD601-R	TRANSISTOR	1	<R>
QR2701	MRN1404	TRANSISTOR	1	<R>
R2701	ERJ6GEYG102	M.RESISTOR CH 1/10W 1K	1	
R2702	ERJ6GEYJ101	M.RESISTOR CH 1/10W 100	1	
R2703	ERJ6GEYJ103	M.RESISTOR CH 1/10W 10K	1	
R2704	ERJ6GEYJ223	M.RESISTOR CH 1/10W 22K	1	
R2705	ERJ6GEYJ123	M.RESISTOR CH 1/10W 12K	1	
R2706	ERJ6GEYJ223	M.RESISTOR CH 1/10W 22K	1	
R2707,08	ERJ6GEYJ103	M.RESISTOR CH 1/10W 10K	2	
R2709	ERJ6GEYJ105	M.RESISTOR CH 1/10W 1M	1	
R2710	ERJ6GEYJ182	M.RESISTOR CH 1/10W 1.8K	1	
R2711	ERJ6GEYJ103	M.RESISTOR CH 1/10W 10K	1	
R2712	ERJ6GEYJ102	M.RESISTOR CH 1/10W 1K	1	
R2713,14	ERDS2TJ330	C.RESISTOR 1/4W 33	2	
R2715	ERX12SJ1R0	M.RESISTOR CH 1/2W 1	1	
R2716	ERDS2TJ330	C.RESISTOR 1/4W 33	1	
R2717	ERJ6GEYJ101	M.RESISTOR CH 1/10W 100	1	
R2718	ERJ6GEYJ272	M.RESISTOR CH 1/10W 2.7K	1	
R2719	ERJ6GEYJ822	M.RESISTOR CH 1/10W 8.2K	1	
R2720	ERJ6GEYJ221	M.RESISTOR CH 1/10W 220	1	
R2721	ERJ6GEYJ102	M.RESISTOR CH 1/10W 1K	1	
R2722,23	ERJ6GEYJ222	M.RESISTOR CH 1/10W 2.2K	2	
R2724	ERJ6GEYJ224	M.RESISTOR CH 1/10W 220K	1	
R2725,26	ERJ6GEYJ102	M.RESISTOR CH 1/10W 1K	2	
R2727	ERJ6GEYJ681	M.RESISTOR CH 1/10W 680	1	
R2728	ERJ6GEYJ823	M.RESISTOR CH 1/10W 82K	1	
R2729	ERJ6GEYJ103	M.RESISTOR CH 1/10W 10K	1	
R2730	ERJ6GEYJ101	M.RESISTOR CH 1/10W 100	1	
R2731	ERJ6GEYJ122	M.RESISTOR CH 1/10W 1.2K	1	
R2732	ERJ6GEYJ103	M.RESISTOR CH 1/10W 10K	1	
R2733	ERJ6GEYJ102	M.RESISTOR CH 1/10W 1K	1	
R2734,35	ERDS2TJ330	C.RESISTOR 1/4W 33	2	
R2736	ERX12SJR47	M.RESISTOR CH 1/2W 0.47	1	
R2737	ERDS2TJ330	C.RESISTOR 1/4W 33	1	
R2738	ERJ6GEYJ102	M.RESISTOR CH 1/10W 1K	1	
R2739	ERJ6GEYJ221	M.RESISTOR CH 1/10W 220	1	
R2740	ERJ6GEYJ224	M.RESISTOR CH 1/10W 220K	1	
R2741,42	ERJ6GEYJ102	M.RESISTOR CH 1/10W 1K	2	
R2743	ERJ6GEYJ223	M.RESISTOR CH 1/10W 22K	1	
		MISCELLANEOUS		
E47	VMX2183	SPACER	1	

Ref.No.	Part No.	Part Name & Description	Pcs	Remarks
	VEP03B43C	P.C.BOARD W/COMPONENT		AG-8700E
		VIDEO I/O		
C3001-03	ECUM1H103KBN	C.CAPACITOR CH 50V 0.01U	3	
C3004	ECUM1H223KBN	C.CAPACITOR 50V 0.022U	1	
C3005	ECEV1HVR47Q	E.CAPACITOR 50V 0.47U	1	
C3006	ECUM1E104ZFN	C.CAPACITOR CH 25V 0.1U	1	
C3007	ECUM1H101JCN	C.CAPACITOR CH 50V 100P	1	
C3008	ECUM1C105ZFN	C.CAPACITOR CH 16V 1U	1	
C3009	ECUM1H103KBN	C.CAPACITOR CH 50V 0.01U	1	
C3010	ECUM1H680JCN	C.CAPACITOR CH 50V 68P	1	
C3011	ECUM1H391JCN	C.CAPACITOR CH 50V 390P	1	
C3012	ECUM1H103KBN	C.CAPACITOR CH 50V 0.01U	1	
C3013	ECUM1H270JCN	C.CAPACITOR CH 50V 27P	1	
C3014	ECUM1H220JCN	C.CAPACITOR CH 50V 22P	1	
C3015	ECUM1H103KBN	C.CAPACITOR CH 50V 0.01U	1	
C3016	ECEV1HV3R3Q	E.CAPACITOR 50V 3.3U	1	
C3017	ECUM1H560JCN	C.CAPACITOR CH 50V 56P	1	
C3018-20	ECUM1H103KBN	C.CAPACITOR CH 50V 0.01U	3	
C3021	ECUM1H221JCN	C.CAPACITOR CH 50V 220P	1	
C3022-24	ECUM1H103KBN	C.CAPACITOR CH 50V 0.01U	3	
C3025	ECEV0JV470Q	E.CAPACITOR 6.3V 47U	1	
C3026	ECUM1H560JCN	C.CAPACITOR CH 50V 56P	1	
C3027	ECEV0JV470Q	E.CAPACITOR 6.3V 47U	1	
C3028-30	ECUM1H103KBN	C.CAPACITOR CH 50V 0.01U	3	
C3032,33	ECUM1H220JCN	C.CAPACITOR CH 50V 22P	2	
C3034	ECUM1H820JCN	C.CAPACITOR CH 50V 82P	1	
C3035	ECUM1H220JCN	C.CAPACITOR CH 50V 22P	1	
C3037	ECUM1H070DCN	C.CAPACITOR CH 50V 7P	1	
C3038	ECEV0JV470Q	E.CAPACITOR 6.3V 47U	1	
C3039,40	ECUM1H103KBN	C.CAPACITOR CH 50V 0.01U	2	
C3041	ECEV1CV100Q	E.CAPACITOR 16V 10U	1	
C3042	ECUM1H271JCN	C.CAPACITOR CH 50V 270P	1	
C3043	ECUM1H103KBN	C.CAPACITOR CH 50V 0.01U	1	
C3044	ECEV1CV100Q	E.CAPACITOR 16V 10U	1	
C3045-48	ECUM1H103KBN	C.CAPACITOR CH 50V 0.01U	4	
C3049	ECUM1H820JCN	C.CAPACITOR CH 50V 82P	1	
C3050,51	ECUM1H330JCN	C.CAPACITOR CH 50V 33P	2	
C3052	ECEV0JV220Q	E.CAPACITOR 6.3V 22U	1	
C3053	ECUM1H330JCN	C.CAPACITOR CH 50V 33P	1	
C3080,81	ECUM1H103KBN	C.CAPACITOR CH 50V 0.01U	2	
C3083	ECUM1H681JCN	C.CAPACITOR CH 50V 680P	1	
C3085	ECQV1H104JZ	P.CAPACITOR 50V 0.1U	1	
C3086	ECUM1H270JCN	C.CAPACITOR CH 50V 27P	1	
C3087	ECUM1E104ZFN	C.CAPACITOR CH 25V 0.1U	1	
C3088	ECUM1C105ZFN	C.CAPACITOR CH 16V 1U	1	
C3102	ECQV1H104JZ	P.CAPACITOR 50V 0.1U	1	
C3103	ECQV1H154JZ	P.CAPACITOR 50V 0.15U	1	
C3105,06	ECUM1C105ZFN	C.CAPACITOR CH 16V 1U	2	
C3107	ECUM1H820JCN	C.CAPACITOR CH 50V 82P	1	
C3108	ECUM1H101JCN	C.CAPACITOR CH 50V 100P	1	
C3109,10	ECUM1H103KBN	C.CAPACITOR CH 50V 0.01U	2	
C3111	ECUM1H102JCN	C.CAPACITOR CH 50V 1000P	1	
C3112-14	ECUM1H103ZFN	C.CAPACITOR 50V 0.01U	3	
C3115-20	ECUM1E104ZFN	C.CAPACITOR CH 25V 0.1U	6	
C3121	ECUM1H561JCN	C.CAPACITOR CH 50V 560P	1	
C3122,23	ECUM1H151JCN	C.CAPACITOR CH 50V 150P	2	
C3124	ECUM1H560JCN	C.CAPACITOR CH 50V 56P	1	
C3125-27	ECUM1E104ZFN	C.CAPACITOR CH 25V 0.1U	3	
C3129-32	ECEV0JV470Q	E.CAPACITOR 6.3V 47U	4	
C3133	ECEV1HV010Q	E.CAPACITOR 50V 1U	1	
C3135,36	ECUM1E104ZFN	C.CAPACITOR CH 25V 0.1U	2	
C3138	ECUM1E104ZFN	C.CAPACITOR CH 25V 0.1U	1	
C3139	ECUM1C105ZFN	C.CAPACITOR CH 16V 1U	1	
C3140	ECUM1H103KBN	C.CAPACITOR CH 50V 0.01U	1	
C3141	ECUM1H101JCN	C.CAPACITOR CH 50V 100P	1	
C3201	ECEV0JV470Q	E.CAPACITOR 6.3V 47U	1	
C3202	ECUM1C224KBM	C.CAPACITOR CH 16V 0.22U	1	
C3203	ECHU1C392GB	P.CAPACITOR 16V 3900P	1	
C3204	ECQV1H154JZ	P.CAPACITOR 50V 0.15U	1	
C3205	ECQV1H334JZ	P.CAPACITOR 50V 0.33U	1	
C3206	ECUM1E104ZFN	C.CAPACITOR CH 25V 0.1U	1	

Ref.No.	Part No.	Part Name & Description	Pcs	Remarks
C3207	ECUM1H220JCN	C.CAPACITOR CH 50V 22P	1	
C3208	ECUM1H103KBN	C.CAPACITOR CH 50V 0.01U	1	
C3209	ECUM1C105ZFN	C.CAPACITOR CH 16V 1U	1	
C3210	ECUM1E104ZFN	C.CAPACITOR CH 25V 0.1U	1	
C3211	ECUM1H103KBN	C.CAPACITOR CH 50V 0.01U	1	
C3212	ECUM1C224KBM	C.CAPACITOR CH 16V 0.22U	1	
C3213	ECUM1H102JCN	C.CAPACITOR CH 50V 1000P	1	
C3214,15	ECUM1H103KBN	C.CAPACITOR CH 50V 0.01U	2	
C3216	ECUM1E104ZFN	C.CAPACITOR CH 25V 0.1U	1	
C3217,18	ECUM1H103KBN	C.CAPACITOR CH 50V 0.01U	2	
C3220	ECEV0GV101Q	E.CAPACITOR 4V 100U	1	
C3221	ECUM1E104ZFN	C.CAPACITOR CH 25V 0.1U	1	
C3223	ECUM1H152KBN	C.CAPACITOR CH 50V 1500P	1	
C3224	ECUM1C224KBM	C.CAPACITOR CH 16V 0.22U	1	
C3225	ECUM1H103ZFN	C.CAPACITOR 50V 0.01U	1	
C3226,27	ECEV0JV470Q	E.CAPACITOR 6.3V 47U	2	
C3228	ECUM1H471JCN	C.CAPACITOR CH 50V 470P	1	
C3229,30	ECUM1H561JCN	C.CAPACITOR CH 50V 560P	2	
C3231	ECEV0JV330Q	E.CAPACITOR 6.3V 33U	1	
C3232	ECUM1H330JCN	C.CAPACITOR CH 50V 33P	1	
C3233	ECEV1EV4R7Q	E.CAPACITOR 25V 4.7U	1	
C3234,35	ECEV0JV470Q	E.CAPACITOR 6.3V 47U	2	
C3237	ECUM1H103ZFN	C.CAPACITOR 50V 0.01U	1	
C3238	ECEV1EN4R7Q	E.CAPACITOR 25V 4.7U	1	
C3239-41	ECEV0JV470Q	E.CAPACITOR 6.3V 47U	3	
C3242	ECEV1CV100Q	E.CAPACITOR 16V 10U	1	
C3244,45	ECEV1EV4R7Q	E.CAPACITOR 25V 4.7U	2	
C3246	ECUM1C105ZFN	C.CAPACITOR CH 16V 1U	1	
C3247	ECEV1HVR47Q	E.CAPACITOR 50V 0.47U	1	
C3248	ECUM1C224KBM	C.CAPACITOR CH 16V 0.22U	1	
C3251	ECUM1H070DCN	C.CAPACITOR CH 50V 7P	1	
C3253,54	ECUM1H220JCN	C.CAPACITOR CH 50V 22P	2	
C3255	ECEV0JV470Q	E.CAPACITOR 6.3V 47U	1	
C3256-58	ECUM1C224KBM	C.CAPACITOR CH 16V 0.22U	3	
C3259	ECUM1H103ZFN	C.CAPACITOR 50V 0.01U	1	
C3260	ECUM1H471JCN	C.CAPACITOR CH 50V 470P	1	
C3261	ECUM1C224KBM	C.CAPACITOR CH 16V 0.22U	1	
C3262	ECUM1H330JCN	C.CAPACITOR CH 50V 33P	1	
C3263	ECUM1H560JCN	C.CAPACITOR CH 50V 56P	1	
C3268	ECUM1C224KBM	C.CAPACITOR CH 16V 0.22U	1	
C3269	ECEV0JV470Q	E.CAPACITOR 6.3V 47U	1	
C3297	ECEV1CV100Q	E.CAPACITOR 16V 10U	1	
C3298	ECUM1H103ZFN	C.CAPACITOR 50V 0.01U	1	
C3299	ECUM1C224KBM	C.CAPACITOR CH 16V 0.22U	1	
C3305	ECUM1E104ZFN	C.CAPACITOR CH 25V 0.1U	1	
C3306-18	ECUM1H103KBN	C.CAPACITOR CH 50V 0.01U	13	
C3319-23	ECUM1H104ZFN	C.CAPACITOR 50V 0.1U	5	
C3325	ECUM1H121JCN	C.CAPACITOR CH 50V 120P	1	
C3326	ECUM1H151JCN	C.CAPACITOR CH 50V 150P	1	
C3327	ECUM1H180JCN	C.CAPACITOR CH 50V 18P	1	
C3328	ECUM1H221JCN	C.CAPACITOR CH 50V 220P	1	
C3329	ECUM1H271JCN	C.CAPACITOR CH 50V 270P	1	
C3330	ECUM1H331JCN	C.CAPACITOR CH 50V 330P	1	
C3331	ECUM1H391JCN	C.CAPACITOR CH 50V 390P	1	
C3332	ECUM1H390JCN	C.CAPACITOR CH 50V 39P	1	
C3334	ECUM1H100DCN	C.CAPACITOR CH 50V 10P	1	
C3336	ECUM1H181JCN	C.CAPACITOR CH 50V 180P	1	
C3337	ECUM1H103ZFN	C.CAPACITOR 50V 0.01U	1	
C3338-41	ECEV0JV470Q	E.CAPACITOR 6.3V 47U	4	
C3342	ECEV1HV3R3Q	E.CAPACITOR 50V 3.3U	1	
C3343	ECUM1H180JCN	C.CAPACITOR CH 50V 18P	1	
C3344	ECUM1H103KBN	C.CAPACITOR CH 50V 0.01U	1	
C3345,46	ECUM1H330JCN	C.CAPACITOR CH 50V 33P	2	
C3347	ECUM1H680JCN	C.CAPACITOR CH 50V 68P	1	
C3401	ECEV0JV470Q	E.CAPACITOR 6.3V 47U	1	
C3402	ECUM1H103KBN	C.CAPACITOR CH 50V 0.01U	1	
C3404-06	ECUM1H103KBN	C.CAPACITOR CH 50V 0.01U	3	
C3443-46	ECUM1H103KBN	C.CAPACITOR CH 50V 0.01U	4	
C3447,48	ECUM1H150JCN	C.CAPACITOR CH 50V 15P	2	
C3449-65	ECUM1H103ZFN	C.CAPACITOR 50V 0.01U	17	
C3466	ECEV1CV100Q	E.CAPACITOR 16V 10U	1	
C3467	ECEV1HV2R2Q	E.CAPACITOR 50V 2.2U	1	
C3468-71	ECEV0JV220Q	E.CAPACITOR 6.3V 22U	4	
C3472	ECEV0JV470Q	E.CAPACITOR 6.3V 47U	1	
C3473	ECEV1CV100Q	E.CAPACITOR 16V 10U	1	

Ref.No.		Part No.	Part Name & Description	Pcs	Remarks
C3474		ECUM1H223KBN	C.CAPACITOR 50V 0.022U	1	
C3475		ECUM1H101JCN	C.CAPACITOR CH 50V 100P	1	
C3476		ECUM1H220JCN	C.CAPACITOR CH 50V 22P	1	
C3478		ECUM1H121JCN	C.CAPACITOR CH 50V 120P	1	
C3479		ECUM1E104ZFN	C.CAPACITOR CH 25V 0.1U	1	
C3501		ECEV0JV101Q	E.CAPACITOR 6.3V 100U	1	
C3502		ECUM1E104ZFN	C.CAPACITOR CH 25V 0.1U	1	
C3503		ECEV0GV101Q	E.CAPACITOR 4V 100U	1	
C3504		ECEV0JV470Q	E.CAPACITOR 6.3V 47U	1	
C3505		ECUM1H103ZFN	C.CAPACITOR 50V 0.01U	1	
C3506		ECUM1E104ZFN	C.CAPACITOR CH 25V 0.1U	1	
C3507		ECUM1H103ZFN	C.CAPACITOR 50V 0.01U	1	
C3508		ECEV0GV101Q	E.CAPACITOR 4V 100U	1	
C3602		ECUM1E104ZFN	C.CAPACITOR CH 25V 0.1U	1	
C3603		ECUM1H470JCN	C.CAPACITOR CH 50V 47P	1	
C3604		ECUM1E104ZFN	C.CAPACITOR CH 25V 0.1U	1	
C3605		ECUM1H470JCN	C.CAPACITOR CH 50V 47P	1	
D3001-03		MA151K	DIODE	3	<R>
D3201,02		1SS283	DIODE	2	<R>
D3203		MA151K	DIODE	1	<R>
D3206		MA151K	DIODE	1	<R>
D3401		MA28W-B	DIODE	1	<R>
D3411		MA151K	DIODE	1	<R>
D3501		11EQS04	DIODE	1	<R>
FL3001		ELB4R031	FILTER	1	
FL3101		VLF1050	FILTER	1	
FL3102,03		VLF1155	FILTER	2	
FL3201		VLF1045	FILTER	1	
FL3202		VLF1156	FILTER	1	
FL3203		VLF1157	FILTER	1	
FL3204		VLF1156	FILTER	1	
FL3205		VLF1157	FILTER	1	
FL3301		ELB4H068	FILTER	1	
FL3401		VLF0526	FILTER	1	
FL3402-04		VLF0523	FILTER	3	
FL3405		VLF0526	FILTER	1	
FL3406		VLF1156	FILTER	1	
FL3407		VLF1157	FILTER	1	
IC3001		MC74HC86F	IC	1	<R>
IC3002		TC7S04F	IC	1	<R>
IC3003		NJM78L05UA	IC	1	<R>
IC3004		M52083FP	IC	1	<R>
IC3005		LM324NS	IC	1	<R>
IC3006		AN6308S	IC	1	<R>
IC3007		MC14052BF	IC	1	<R>
IC3010		AN78N05	IC	1	<R>
IC3101		NJM2234MA	IC	1	<R>
IC3102		TL8823F	IC	1	<R>
IC3103		NJM2233BMA	IC	1	<R>
IC3201		NJM592M8	IC	1	<R>
IC3202		MC14577CP	IC	1	<R>
IC3203		NJM2235MA	IC	1	<R>
IC3204		TC4W53F	IC	1	<R>
IC3205		TA75S01F	IC	1	<R>
IC3206		AN3296S	IC	1	<R>
IC3207		NJM78L05UA	IC	1	<R>
IC3208		TK16031M	IC	1	<R>
IC3301		NJM2234MA	IC	1	<R>
IC3302,03		AN6308S	IC	2	<R>
IC3401		MC74HC157AF	IC	1	<R>
IC3402,03		MC74HC163AF	IC	2	<R>
IC3404		MC74HC32AF	IC	1	<R>
IC3405		MC74HC74AF	IC	1	<R>
IC3406		TC7WU04F	IC	1	<R>
IC3407		MC74HC08AF	IC	1	<R>
IC3408		MC74HC74AF	IC	1	<R>

Ref.No.		Part No.	Part Name & Description	Pcs	Remarks
IC3409		MC74HC04AF	IC	1	<R>
IC3410		MN4538BS	IC	1	<R>
IC3411		HM63021FP	IC	1	<R>
IC3412		MC74HC541AF	IC	1	<R>
IC3413		MB40778PF	IC	1	<R>
IC3414		MC74HC32AF	IC	1	<R>
IC3416		TC4S30F	IC	1	<R>
IC3417		MC14577CP	IC	1	<R>
IC3418		CXD1175AM	IC	1	<R>
IC3419		MC74HC74AF	IC	1	<R>
IC3420		TC7S08F	IC	1	<R>
IC3421		TC7S04F	IC	1	<R>
L3001		VLQ0163J181	COIL 180UH	1	
L3002		VLQ0163J390	COIL 39UH	1	
L3003		VLQ0163J330	COIL 33UH	1	
L3006		VLQ0163J270	COIL 27UH	1	
L3007,08		VLQ0163J330	COIL 33UH	2	
L3009		VLQ0163J100	COIL 10UH	1	
L3010		VLQ0163J120	COIL 12UH	1	
L3011		VLQ0163J180	COIL 18UH	1	
L3012,13		VLQ0163J100	COIL 10UH	2	
L3014		VLQ0163J101	COIL 100UH	1	
L3015-17		VLQ0319K101	COIL 100UH	3	
L3018		VLQ0133J271	COIL 270UH	1	
L3019		VLQ0163J101	COIL 100UH	1	
L3020		VLQ0133J821	COIL 820UH	1	
L3021		VLQ0163J151	COIL 150UH	1	
L3022		VLQ0163J390	COIL 39UH	1	
L3023		VLQ0163J820	COIL 82UH	1	
L3101		VLQ0133J331	COIL 330UH	1	
L3102		VLQ0133J561	COIL 560UH	1	
L3103		VLQ0133J391	COIL 390UH	1	
L3104		VLQ0133J561	COIL 560UH	1	
L3105		VLQ0133J102	COIL 1000UH	1	
L3107		VLQ0163J151	COIL 150UH	1	
L3108		VLQ0163J220	COIL 22UH	1	
L3109,10		VLQ0163J330	COIL 33UH	2	
L3111,12		VLQ0319K101	COIL 100UH	2	
L3113		VLQ0133J681	COIL 680UH	1	
L3114		VLQ0163J150	COIL 15UH	1	
L3203		VLQ0133J271	COIL 270UH	1	
L3205-08		VLQ0319K101	COIL 100UH	4	
L3211		VLQ0163J560	COIL 56UH	1	
L3212		VLQ0163J270	COIL 27UH	1	
L3225		VLQ0319K101	COIL 100UH	1	
L3307		VLQ0163J820	COIL 82UH	1	
L3308		VLQ0163J151	COIL 150UH	1	
L3311		VLQ0163J101	COIL 100UH	1	
L3312,13		VLQ0163J221	COIL 220UH	2	
L3314		VLQ0163J4R7	COIL 4.7UH	1	
L3315		VLQ0163J6R8	COIL 6.8UH	1	
L3316-19		VLQ0319K101	COIL 100UH	4	
L3320		VLQ0163J6R8	COIL 6.8UH	1	
L3321		VLQ0163J151	COIL 150UH	1	
L3401-05		VLQ0319K101	COIL 100UH	5	
P3002		VJP3080	CONNECTOR (MALE)	1	
P3931		VJP3176B100	CONNECTOR	1	
Q3001		MSD601-R	TRANSISTOR	1	<R>
Q3002		2SD1328-S	TRANSISTOR	1	<R>
Q3003		2SB643	TRANSISTOR	1	<R>
Q3004		MSC2295-B	TRANSISTOR	1	<R>
Q3005		2SK374-R	TRANSISTOR	1	<R>
Q3006,07		MSD601-R	TRANSISTOR	2	<R>
Q3008,09		MSC2295-B	TRANSISTOR	2	<R>
Q3010		MSB709-R	TRANSISTOR	1	<R>
Q3011		MSC2295-B	TRANSISTOR	1	<R>

Ref.No.		Part No.	Part Name & Description	Pcs	Remarks
Q3013,14		MSC2295-B	TRANSISTOR	2	<R>
Q3015		MSB709-R	TRANSISTOR	1	<R>
Q3016		MSC2295-B	TRANSISTOR	1	<R>
Q3101		MSC2295-B	TRANSISTOR	1	<R>
Q3104,05		MSC2295-B	TRANSISTOR	2	<R>
Q3106		MSB709-R	TRANSISTOR	1	<R>
Q3107		MSC2295-B	TRANSISTOR	1	<R>
Q3108		MSB709-R	TRANSISTOR	1	<R>
Q3109		MSC2295-B	TRANSISTOR	1	<R>
Q3111		MSB709-R	TRANSISTOR	1	<R>
Q3112		MSD601-R	TRANSISTOR	1	<R>
Q3113		MSC2295-B	TRANSISTOR	1	<R>
Q3114,15		MSD601-R	TRANSISTOR	2	<R>
Q3116		MSC2295-B	TRANSISTOR	1	<R>
Q3117,18		MSD601-R	TRANSISTOR	2	<R>
Q3119		MSC2295-B	TRANSISTOR	1	<R>
Q3120		MSD601-R	TRANSISTOR	1	<R>
Q3121		XN1213	TRANSISTOR-TRANSISTOR	1	<R>
Q3122		MSB709-R	TRANSISTOR	1	<R>
Q3201-03		MSD601-R	TRANSISTOR	3	<R>
Q3204-08		MSC2295-B	TRANSISTOR	5	<R>
Q3210,11		MSD601-R	TRANSISTOR	2	<R>
Q3213		XN1504	TRANSISTOR	1	<R>
Q3214-17		MSD601-R	TRANSISTOR	4	<R>
Q3219		MSD601-R	TRANSISTOR	1	<R>
Q3221		MSD601-R	TRANSISTOR	1	<R>
Q3222		MSC2295-B	TRANSISTOR	1	<R>
Q3223		MSD601-R	TRANSISTOR	1	<R>
Q3224		MSC2295-B	TRANSISTOR	1	<R>
Q3301		MSD601-R	TRANSISTOR	1	<R>
Q3302		MSB709-R	TRANSISTOR	1	<R>
Q3303		MSD601-R	TRANSISTOR	1	<R>
Q3304		MSC2295-B	TRANSISTOR	1	<R>
Q3305		MSB709-R	TRANSISTOR	1	<R>
Q3306-11		MSD601-R	TRANSISTOR	6	<R>
Q3312		MSC2295-B	TRANSISTOR	1	<R>
Q3401		MSD601-R	TRANSISTOR	1	<R>
Q3601,02		MSD601-R	TRANSISTOR	2	<R>
Q3603		MSC2295-B	TRANSISTOR	1	<R>
Q3604		2SA1022-C	TRANSISTOR	1	<R>
QR3001		MRN2404	TRANSISTOR	1	<R>
QR3002		DTC363EK	TRANSISTOR-RESISTOR	1	<R>
QR3003,04		MRN1404	TRANSISTOR	2	<R>
QR3005		MRN2404	TRANSISTOR	1	<R>
QR3006		MRN1404	TRANSISTOR	1	<R>
QR3009		MRN2404	TRANSISTOR	1	<R>
QR3010,11		MRN1404	TRANSISTOR	2	<R>
QR3102		MRN2404	TRANSISTOR	1	<R>
QR3201,02		MRN1404	TRANSISTOR	2	<R>
QR3401		XN4501	TRANSISTOR-RESISTOR	1	<R>
QR3601		MRN1404	TRANSISTOR	1	<R>
R3001		ERJ6GEYJ271	M.RESISTOR CH 1/10W 270	1	
R3002		ERJ6GEYJ681	M.RESISTOR CH 1/10W 680	1	
R3003		ERJ6GEYJ105	M.RESISTOR CH 1/10W 1M	1	
R3004		ERJ6GEYJ103	M.RESISTOR CH 1/10W 10K	1	
R3005		ERJ6GEYJ332	M.RESISTOR CH 1/10W 3.3K	1	
R3006		ERJ6GEYJ223	M.RESISTOR CH 1/10W 22K	1	
R3007,08		ERJ6GEYJ332	M.RESISTOR CH 1/10W 3.3K	2	
R3009		ERJ6GEYJ182	M.RESISTOR CH 1/10W 1.8K	1	
R3010,11		ERJ6GEYJ103	M.RESISTOR CH 1/10W 10K	2	
R3012		ERJ6GEYJ820	M.RESISTOR CH 1/10W 82	1	
R3013		ERJ6GEYG472	M.RESISTOR CH 1/10W 4.7K	1	
R3015		ERJ6GEYJ183	M.RESISTOR CH 1/10W 18K	1	
R3016		ERJ6GEY0R00	M.RESISTOR CH 1/10W 0	1	
R3018		ERJ6GEYG472	M.RESISTOR CH 1/10W 4.7K	1	
R3019		ERJ6GEYJ271	M.RESISTOR CH 1/10W 270	1	
R3020		ERJ6GEYJ821	M.RESISTOR CH 1/10W 820	1	
R3021		ERJ6GEYG472	M.RESISTOR CH 1/10W 4.7K	1	
R3022		ERJ6GEYJ103	M.RESISTOR CH 1/10W 10K	1	

Ref.No.		Part No.	Part Name & Description	Pcs	Remarks
R3023		ERJ6GEYG472	M.RESISTOR CH 1/10W 4.7K	1	
R3025		ERJ6GEYJ103	M.RESISTOR CH 1/10W 10K	1	
R3026		ERJ6GEYJ332	M.RESISTOR CH 1/10W 3.3K	1	
R3027		ERJ6GEYJ683	M.RESISTOR CH 1/10W 68K	1	
R3029		ERJ6GEYJ473	M.RESISTOR CH 1/10W 47K	1	
R3030		ERJ6GEYJ102	M.RESISTOR CH 1/10W 1K	1	
R3031-33		ERJ6GEYJ103	M.RESISTOR CH 1/10W 10K	3	
R3034		ERJ6GEYJ102	M.RESISTOR CH 1/10W 1K	1	
R3036		ERJ6GEYJ102	M.RESISTOR CH 1/10W 1K	1	
R3037		ERJ6GEYJ105	M.RESISTOR CH 1/10W 1M	1	
R3038		ERJ6GEYJ393	M.RESISTOR CH 1/10W 39K	1	
R3039		ERJ6GEYJ103	M.RESISTOR CH 1/10W 10K	1	
R3040		ERJ6GEYJ473	M.RESISTOR CH 1/10W 47K	1	
R3041		ERJ6GEYJ563	M.RESISTOR CH 1/10W 56K	1	
R3042		ERJ6GEYJ681	M.RESISTOR CH 1/10W 680	1	
R3044-46		ERJ6GEYJ102	M.RESISTOR CH 1/10W 1K	3	
R3047		ERJ6GEYJ121	M.RESISTOR CH 1/10W 120	1	
R3048		ERJ6GEYJ122	M.RESISTOR CH 1/10W 1.2K	1	
R3049,50		ERJ6GEYJ561	M.RESISTOR CH 1/10W 560	2	
R3051		ERJ6GEYJ272	M.RESISTOR CH 1/10W 2.7K	1	
R3052		ERJ6GEYJ102	M.RESISTOR CH 1/10W 1K	1	
R3053		ERJ6GEYJ122	M.RESISTOR CH 1/10W 1.2K	1	
R3054		ERJ6GEYJ221	M.RESISTOR CH 1/10W 220	1	
R3055		ERJ6GEYJ561	M.RESISTOR CH 1/10W 560	1	
R3056		ERJ6GEYJ102	M.RESISTOR CH 1/10W 1K	1	
R3057		ERJ6GEYG472	M.RESISTOR CH 1/10W 4.7K	1	
R3058,59		ERJ6GEYJ102	M.RESISTOR CH 1/10W 1K	2	
R3060		ERJ6GEYJ682	M.RESISTOR CH 1/10W 6.8K	1	
R3061		ERJ6GEYJ152	M.RESISTOR CH 1/10W 1.5K	1	
R3065		ERJ6GEYJ471	M.RESISTOR CH 1/10W 470	1	
R3067,68		ERJ6GEYJ102	M.RESISTOR CH 1/10W 1K	2	
R3069		ERJ6GEYJ561	M.RESISTOR CH 1/10W 560	1	
R3070		ERJ6GEYJ102	M.RESISTOR CH 1/10W 1K	1	
R3071		ERJ6GEYJ103	M.RESISTOR CH 1/10W 10K	1	
R3072		ERJ6GEYJ182	M.RESISTOR CH 1/10W 1.8K	1	
R3073		ERJ6GEYJ223	M.RESISTOR CH 1/10W 22K	1	
R3074		ERJ6GEYJ102	M.RESISTOR CH 1/10W 1K	1	
R3075		ERJ6GEYJ561	M.RESISTOR CH 1/10W 560	1	
R3077		ERJ6GEY0R00	M.RESISTOR CH 1/10W 0	1	
R3079		ERJ6GEYJ222	M.RESISTOR CH 1/10W 2.2K	1	
R3080		ERJ6GEYJ224	M.RESISTOR CH 1/10W 220K	1	
R3081		ERJ6GEYJ561	M.RESISTOR CH 1/10W 560	1	
R3082		ERJ6GEYJ681	M.RESISTOR CH 1/10W 680	1	
R3083		ERJ6GEYJ102	M.RESISTOR CH 1/10W 1K	1	
R3084		ERJ6GEYJ681	M.RESISTOR CH 1/10W 680	1	
R3085		ERJ6GEYJ102	M.RESISTOR CH 1/10W 1K	1	
R3086		ERJ6GEYJ331	M.RESISTOR CH 1/10W 330	1	
R3089		ERJ6GEYJ152	M.RESISTOR CH 1/10W 1.5K	1	
R3090		ERJ6GEYJ102	M.RESISTOR CH 1/10W 1K	1	
R3104-14		ERJ6GEYJ102	M.RESISTOR CH 1/10W 1K	11	
R3115		ERJ6GEYJ272	M.RESISTOR CH 1/10W 2.7K	1	
R3116,17		ERJ6GEYJ102	M.RESISTOR CH 1/10W 1K	2	
R3118		ERJ6GEYJ151	M.RESISTOR CH 1/10W 150	1	
R3119-28		ERJ6GEYJ152	M.RESISTOR CH 1/10W 1.5K	10	
R3129		ERJ6GEYG153	M.RESISTOR CH 1/10W 15K	1	
R3130		ERJ6GEYJ272	M.RESISTOR CH 1/10W 2.7K	1	
R3131,32		ERJ6GEYJ222	M.RESISTOR CH 1/10W 2.2K	2	
R3133,34		ERJ6GEYJ102	M.RESISTOR CH 1/10W 1K	2	
R3135		ERJ6GEYJ182	M.RESISTOR CH 1/10W 1.8K	1	
R3136-39		ERJ6GEYJ223	M.RESISTOR CH 1/10W 22K	4	
R3140		ERJ6GEYJ330	M.RESISTOR CH 1/10W 33	1	
R3141,42		ERJ6GEYG333	M.RESISTOR CH 1/10W 33K	2	
R3143		ERJ6GEYJ222	M.RESISTOR CH 1/10W 2.2K	1	
R3144		ERJ6GEYJ393	M.RESISTOR CH 1/10W 39K	1	
R3145		ERJ6GEYJ470	M.RESISTOR CH 1/10W 47	1	
R3146		ERJ6GEYJ272	M.RESISTOR CH 1/10W 2.7K	1	
R3147		ERJ6GEYJ471	M.RESISTOR CH 1/10W 470	1	
R3149,50		ERJ6GEYG472	M.RESISTOR CH 1/10W 4.7K	2	
R3151		ERJ6GEYJ471	M.RESISTOR CH 1/10W 470	1	
R3152		ERJ6GEYJ391	M.RESISTOR CH 1/10W 390	1	
R3153		ERJ6GEYJ681	M.RESISTOR CH 1/10W 680	1	
R3154		ERJ6GEY0R00	M.RESISTOR CH 1/10W 0	1	
R3156		ERJ6GEYJ152	M.RESISTOR CH 1/10W 1.5K	1	
R3157,58		ERJ6GEYJ272	M.RESISTOR CH 1/10W 2.7K	2	
R3159		ERJ6GEYJ102	M.RESISTOR CH 1/10W 1K	1	

Ref.No.		Part No.	Part Name & Description	Pcs	Remarks
R3200		ERJ6GEYJ271	M.RESISTOR CH 1/10W 270	1	
R3201		ERJ6GEY0R00	M.RESISTOR CH 1/10W 0	1	
R3203-05		ERJ6GEYJ102	M.RESISTOR CH 1/10W 1K	3	
R3206		ERJ6GEYG153	M.RESISTOR CH 1/10W 15K	1	
R3207		ERJ6GEYJ223	M.RESISTOR CH 1/10W 22K	1	
R3208		ERJ6GEYJ391	M.RESISTOR CH 1/10W 390	1	
R3209		ERJ6GEYG333	M.RESISTOR CH 1/10W 33K	1	
R3210		ERJ6GEYJ222	M.RESISTOR CH 1/10W 2.2K	1	
R3211		ERJ6GEY0R00	M.RESISTOR CH 1/10W 0	1	
R3212		ERJ6GEYG153	M.RESISTOR CH 1/10W 15K	1	
R3213		ERJ6GEYJ561	M.RESISTOR CH 1/10W 560	1	
R3214-16		ERJ6GEYJ102	M.RESISTOR CH 1/10W 1K	3	
R3217		ERJ6GEYJ271	M.RESISTOR CH 1/10W 270	1	
R3218		ERJ6GEYJ103	M.RESISTOR CH 1/10W 10K	1	
R3219		ERJ6GEYJ102	M.RESISTOR CH 1/10W 1K	1	
R3220		ERJ6GEYJ820	M.RESISTOR CH 1/10W 82	1	
R3221-23		ERJ6GEYJ103	M.RESISTOR CH 1/10W 10K	3	
R3224		ERJ6GEYJ393	M.RESISTOR CH 1/10W 39K	1	
R3225		ERJ6GEYJ113	M.RESISTOR CH 1/10W 11K	1	
R3226		ERJ6GEYJ330	M.RESISTOR CH 1/10W 33	1	
R3227		ERJ6GEYJ104	M.RESISTOR CH 1/10W 100K	1	
R3228		ERJ6GEYJ103	M.RESISTOR CH 1/10W 10K	1	
R3229		ERJ6GEYG333	M.RESISTOR CH 1/10W 33K	1	
R3230		ERJ6GEYJ103	M.RESISTOR CH 1/10W 10K	1	
R3231		ERJ6GEYJ182	M.RESISTOR CH 1/10W 1.8K	1	
R3232		ERJ6GEYJ223	M.RESISTOR CH 1/10W 22K	1	
R3233		ERJ6GEYG472	M.RESISTOR CH 1/10W 4.7K	1	
R3234		ERJ6GEYJ103	M.RESISTOR CH 1/10W 10K	1	
R3235		ERJ6GEYJ471	M.RESISTOR CH 1/10W 470	1	
R3236,37		ERJ6GEYG153	M.RESISTOR CH 1/10W 15K	2	
R3238		ERJ6GEYJ473	M.RESISTOR CH 1/10W 47K	1	
R3239		ERJ6GEYJ151	M.RESISTOR CH 1/10W 150	1	
R3240		ERJ6GEYJ103	M.RESISTOR CH 1/10W 10K	1	
R3241		ERJ6GEYJ562	M.RESISTOR CH 1/10W 5.6K	1	
R3242		ERJ6GEYJ103	M.RESISTOR CH 1/10W 10K	1	
R3243		ERJ6GEYJ471	M.RESISTOR CH 1/10W 470	1	
R3244		ERJ6GEYJ561	M.RESISTOR CH 1/10W 560	1	
R3245		ERJ6GEYG153	M.RESISTOR CH 1/10W 15K	1	
R3246		ERJ6GEYJ331	M.RESISTOR CH 1/10W 330	1	
R3247-50		ERJ6GEYJ332	M.RESISTOR CH 1/10W 3.3K	4	
R3251		ERJ6GEYJ182	M.RESISTOR CH 1/10W 1.8K	1	
R3252		ERJ6GEYJ102	M.RESISTOR CH 1/10W 1K	1	
R3253		ERJ6GEYJ332	M.RESISTOR CH 1/10W 3.3K	1	
R3254		ERJ6GEYJ102	M.RESISTOR CH 1/10W 1K	1	
R3255		ERJ6GEYJ393	M.RESISTOR CH 1/10W 39K	1	
R3256		ERJ6GEYJ332	M.RESISTOR CH 1/10W 3.3K	1	
R3257,58		ERJ6GEYJ471	M.RESISTOR CH 1/10W 470	2	
R3259		ERJ6GEYJ223	M.RESISTOR CH 1/10W 22K	1	
R3260		ERJ6GEY0R00	M.RESISTOR CH 1/10W 0	1	
R3261		ERJ6GEYJ683	M.RESISTOR CH 1/10W 68K	1	
R3262		ERJ6GEYJ103	M.RESISTOR CH 1/10W 10K	1	
R3263		ERJ6GEYJ222	M.RESISTOR CH 1/10W 2.2K	1	
R3264		ERJ6GEYJ474	M.RESISTOR CH 1/10W 470K	1	
R3265		ERJ6GEYJ681	M.RESISTOR CH 1/10W 680	1	
R3266		ERJ6GEYJ561	M.RESISTOR CH 1/10W 560	1	
R3267		ERJ6GEYJ331	M.RESISTOR CH 1/10W 330	1	
R3268		ERJ6GEYG153	M.RESISTOR CH 1/10W 15K	1	
R3269		ERJ6GEYJ103	M.RESISTOR CH 1/10W 10K	1	
R3270		ERJ6GEYJ102	M.RESISTOR CH 1/10W 1K	1	
R3271		ERJ6GEYJ682	M.RESISTOR CH 1/10W 6.8K	1	
R3272		ERJ6GEYJ683	M.RESISTOR CH 1/10W 68K	1	
R3273		ERJ6GEYJ684	M.RESISTOR CH 1/10W 680K	1	
R3274		ERJ6GEYJ753	M.RESISTOR CH 1/10W 75K	1	
R3275		ERJ6GEY0R00	M.RESISTOR CH 1/10W 0	1	
R3276		VRE0034E473	M.RESISTOR CH 1/10W 47K	1	
R3277		ERJ6GEYG153	M.RESISTOR CH 1/10W 15K	1	
R3278		ERJ6GEYJ103	M.RESISTOR CH 1/10W 10K	1	
R3279,80		ERJ6GEYJ561	M.RESISTOR CH 1/10W 560	2	
R3281,82		ERJ6GEYJ102	M.RESISTOR CH 1/10W 1K	2	
R3283		ERJ6GEYJ152	M.RESISTOR CH 1/10W 1.5K	1	
R3284		ERJ6GEYJ102	M.RESISTOR CH 1/10W 1K	1	
R3285		ERJ6GEYJ821	M.RESISTOR CH 1/10W 820	1	
R3286		ERJ6GEYJ105	M.RESISTOR CH 1/10W 1M	1	
R3287		ERJ6GEYJ223	M.RESISTOR CH 1/10W 22K	1	
R3288		ERJ6GEYJ222	M.RESISTOR CH 1/10W 2.2K	1	

Ref.No.		Part No.	Part Name & Description	Pcs	Remarks
R3289		ERJ6GEYJ103	M.RESISTOR CH 1/10W 10K	1	
R3290		ERJ6GEYJ105	M.RESISTOR CH 1/10W 1M	1	
R3291		ERJ6GEYJ561	M.RESISTOR CH 1/10W 560	1	
R3292		ERJ6GEYJ151	M.RESISTOR CH 1/10W 150	1	
R3293		ERJ6GEYJ222	M.RESISTOR CH 1/10W 2.2K	1	
R3294		ERJ6GEYG153	M.RESISTOR CH 1/10W 15K	1	
R3295		ERJ6GEYJ152	M.RESISTOR CH 1/10W 1.5K	1	
R3296		ERJ6GEYJ103	M.RESISTOR CH 1/10W 10K	1	
R3297		ERJ6GEYG472	M.RESISTOR CH 1/10W 4.7K	1	
R3298,99		ERJ6GEYJ562	M.RESISTOR CH 1/10W 5.6K	2	
R3300		ERJ6GEYJ105	M.RESISTOR CH 1/10W 1M	1	
R3302		ERJ6GEY0R00	M.RESISTOR CH 1/10W 0	1	
R3305		ERJ6GEY0R00	M.RESISTOR CH 1/10W 0	1	
R3306		ERJ6GEYJ101	M.RESISTOR CH 1/10W 100	1	
R3308		ERJ6GEYJ122	M.RESISTOR CH 1/10W 1.2K	1	
R3309,10		ERJ6GEYJ102	M.RESISTOR CH 1/10W 1K	2	
R3311		ERJ6GEYJ391	M.RESISTOR CH 1/10W 390	1	
R3312-16		ERJ6GEYJ102	M.RESISTOR CH 1/10W 1K	5	
R3317		ERJ6GEYJ103	M.RESISTOR CH 1/10W 10K	1	
R3318		ERJ6GEYJ101	M.RESISTOR CH 1/10W 100	1	
R3319		ERJ6GEYJ221	M.RESISTOR CH 1/10W 220	1	
R3320		ERJ6GEYJ621	M.RESISTOR CH 1/10W 620	1	
R3321		ERJ6GEYJ152	M.RESISTOR CH 1/10W 1.5K	1	
R3322		ERJ6GEY0R00	M.RESISTOR CH 1/10W 0	1	
R3323		ERJ6GEYJ152	M.RESISTOR CH 1/10W 1.5K	1	
R3324		ERJ6GEYG153	M.RESISTOR CH 1/10W 15K	1	
R3325,26		ERJ6GEYJ221	M.RESISTOR CH 1/10W 220	2	
R3327-33		ERJ6GEYJ222	M.RESISTOR CH 1/10W 2.2K	7	
R3334,35		ERJ6GEYJ223	M.RESISTOR CH 1/10W 22K	2	
R3336		ERJ6GEYJ152	M.RESISTOR CH 1/10W 1.5K	1	
R3337,38		ERJ6GEYJ331	M.RESISTOR CH 1/10W 330	2	
R3339		ERJ6GEYJ152	M.RESISTOR CH 1/10W 1.5K	1	
R3340		ERJ6GEYJ332	M.RESISTOR CH 1/10W 3.3K	1	
R3341		ERJ6GEYJ511	M.RESISTOR CH 1/10W 510	1	
R3342		ERJ6GEYJ470	M.RESISTOR CH 1/10W 47	1	
R3343		ERJ6GEYJ331	M.RESISTOR CH 1/10W 330	1	
R3344		ERJ6GEYG472	M.RESISTOR CH 1/10W 4.7K	1	
R3345,46		ERJ6GEYJ681	M.RESISTOR CH 1/10W 680	2	
R3347,48		ERJ6GEYJ820	M.RESISTOR CH 1/10W 82	2	
R3349		ERJ6GEYJ821	M.RESISTOR CH 1/10W 820	1	
R3351		ERJ6GEY0R00	M.RESISTOR CH 1/10W 0	1	
R3352		ERJ6GEYJ681	M.RESISTOR CH 1/10W 680	1	
R3353		ERJ6GEY0R00	M.RESISTOR CH 1/10W 0	1	
R3354		ERJ6GEYJ222	M.RESISTOR CH 1/10W 2.2K	1	
R3355		ERJ6GEYJ102	M.RESISTOR CH 1/10W 1K	1	
R3357		ERJ6GEYJ561	M.RESISTOR CH 1/10W 560	1	
R3358		ERJ6GEYJ103	M.RESISTOR CH 1/10W 10K	1	
R3359		ERJ6GEYJ221	M.RESISTOR CH 1/10W 220	1	
R3360		ERJ6GEYJ103	M.RESISTOR CH 1/10W 10K	1	
R3361		ERJ6GEYJ182	M.RESISTOR CH 1/10W 1.8K	1	
R3403		ERJ6GEY0R00	M.RESISTOR CH 1/10W 0	1	
R3405-08		ERJ6GEYJ473	M.RESISTOR CH 1/10W 47K	4	
R3409		ERJ6GEY0R00	M.RESISTOR CH 1/10W 0	1	
R3411,12		ERJ6GEY0R00	M.RESISTOR CH 1/10W 0	2	
R3413-16		ERJ6GEYJ473	M.RESISTOR CH 1/10W 47K	4	
R3418		ERJ6GEY0R00	M.RESISTOR CH 1/10W 0	1	
R3419		ERJ6GEYJ100	M.RESISTOR CH 1/10W 10	1	
R3420,21		ERJ6GEYJ101	M.RESISTOR CH 1/10W 100	2	
R3422		ERJ6GEYJ102	M.RESISTOR CH 1/10W 1K	1	
R3423		ERJ6GEYJ564	M.RESISTOR CH 1/10W 560K	1	
R3424,25		ERJ6GEYG103	M.RESISTOR CH 1/10W 10K	2	
R3426		ERJ6GEYJ105	M.RESISTOR CH 1/10W 1M	1	
R3427		ERJ6GEYG302	M.RESISTOR CH 1/10W 3K	1	
R3428		ERJ6GEYJ473	M.RESISTOR CH 1/10W 47K	1	
R3430-32		ERJ6GEYG472	M.RESISTOR CH 1/10W 4.7K	3	
R3440-44		ERJ6GEYG472	M.RESISTOR CH 1/10W 4.7K	5	
R3447-54		ERJ6GEYJ680	M.RESISTOR CH 1/10W 68	8	
R3456-60		ERJ6GEYJ680	M.RESISTOR CH 1/10W 68	5	
R3461		ERJ6GEYG333	M.RESISTOR CH 1/10W 33K	1	
R3462		ERJ6GEYG153	M.RESISTOR CH 1/10W 15K	1	
R3463-65		ERJ6GEYJ680	M.RESISTOR CH 1/10W 68	3	
R3466		ERJ6GEYJ682	M.RESISTOR CH 1/10W 6.8K	1	
R3468		ERJ6GEY0R00	M.RESISTOR CH 1/10W 0	1	
R3469		ERJ6GEYG472	M.RESISTOR CH 1/10W 4.7K	1	
R3471		ERJ6GEYJ152	M.RESISTOR CH 1/10W 1.5K	1	

Ref.No.		Part No.	Part Name & Description	Pcs	Remarks
R3472		ERJ6GEYJ102	M.RESISTOR CH 1/10W 1K	1	
R3473,74		ERJ6GEYJ561	M.RESISTOR CH 1/10W 560	2	
R3475		ERJ6GEYJ102	M.RESISTOR CH 1/10W 1K	1	
R3477		ERJ6GEYJ102	M.RESISTOR CH 1/10W 1K	1	
R3478		ERJ6GEYJ222	M.RESISTOR CH 1/10W 2.2K	1	
R3480		ERJ6GEYJ470	M.RESISTOR CH 1/10W 47	1	
R3481,82		ERJ6GEY0R00	M.RESISTOR CH 1/10W 0	2	
R3501		ERJ6GEY0R00	M.RESISTOR CH 1/10W 0	1	
R3504		ERJ6GEYG153	M.RESISTOR CH 1/10W 15K	1	
R3505		ERJ6GEYJ223	M.RESISTOR CH 1/10W 22K	1	
R3506		ERJ6GEYJ682	M.RESISTOR CH 1/10W 6.8K	1	
R3507		ERJ6GEYJ332	M.RESISTOR CH 1/10W 3.3K	1	
R3508		ERJ6GEYJ102	M.RESISTOR CH 1/10W 1K	1	
R3509		ERJ6GEYJ103	M.RESISTOR CH 1/10W 10K	1	
R3510		ERJ6GEYJ183	M.RESISTOR CH 1/10W 18K	1	
R3511		ERJ6GEYJ273	M.RESISTOR CH 1/10W 27K	1	
R3601		ERJ6GEYJ332	M.RESISTOR CH 1/10W 3.3K	1	
R3602		ERJ6GEYJ222	M.RESISTOR CH 1/10W 2.2K	1	
R3603		ERJ6GEYJ332	M.RESISTOR CH 1/10W 3.3K	1	
R3604		ERJ6GEYJ222	M.RESISTOR CH 1/10W 2.2K	1	
R3605,06		ERJ6GEYJ330	M.RESISTOR CH 1/10W 33	2	
R3607,08		ERJ6GEYJ561	M.RESISTOR CH 1/10W 560	2	
R3609		ERJ6GEYJ122	M.RESISTOR CH 1/10W 1.2K	1	
R3610		ERJ6GEYJ102	M.RESISTOR CH 1/10W 1K	1	
R3611		ERJ6GEYJ821	M.RESISTOR CH 1/10W 820	1	
R3614,15		ERJ6GEYJ223	M.RESISTOR CH 1/10W 22K	2	
SW3401,02		VSR0045	SWITCH	2	<R>
VR3001,02		EVM7JGA00B24	V.RESISTOR	2	
VR3003		EVN32CA00B24	VARIABLE 20K	1	
VR3004-08		EVN32CA00B54	V.RESISTOR 50K	5	
VR3101,02		EVM7DGA00B13	V.RESISTOR 1K	2	
VR3201,02		EVM7DGA00B13	V.RESISTOR 1K	2	
VR3301		EVM7DGA00B23	V.RESISTOR 2K	1	
VR3401		EVN32CA00B24	VARIABLE 20K	1	
X3401		VSX0540	CRYSTAL OSCILLATOR	1	<R>
			MISCELLANEOUS		
E111		VSC2051	SHIELD CASE (MIDDLE)	1	
E112		VSC2052	SHIELD CASE (LOWER)	1	

Ref.No.		Part No.	Part Name & Description	Pcs	Remarks
		VEP03B43D	P.C.BOARD W/COMPONENT		AG-8600E
			VIDEO I/O		
C3001-03		ECUM1H103KBN	C.CAPACITOR CH 50V 0.01U	3	
C3006		ECUM1E104ZFN	C.CAPACITOR CH 25V 0.1U	1	
C3007		ECUM1H101JCN	C.CAPACITOR CH 50V 100P	1	
C3008		ECUM1C105ZFN	C.CAPACITOR 16V 1U	1	
C3009		ECUM1H103KBN	C.CAPACITOR CH 50V 0.01U	1	
C3010		ECUM1H680JCN	C.CAPACITOR CH 50V 68P	1	
C3011		ECUM1H391JCN	C.CAPACITOR CH 50V 390P	1	
C3012		ECUM1H103KBN	C.CAPACITOR CH 50V 0.01U	1	
C3013		ECUM1H270JCN	C.CAPACITOR CH 50V 27P	1	
C3014		ECUM1H220JCN	C.CAPACITOR CH 50V 22P	1	
C3015		ECUM1H103KBN	C.CAPACITOR CH 50V 0.01U	1	
C3016		ECEV1HV3R3Q	E.CAPACITOR 50V 3.3U	1	
C3017		ECUM1H560JCN	C.CAPACITOR CH 50V 56P	1	
C3018-20		ECUM1H103KBN	C.CAPACITOR CH 50V 0.01U	3	
C3021		ECUM1H221JCN	C.CAPACITOR CH 50V 220P	1	
C3022-24		ECUM1H103KBN	C.CAPACITOR CH 50V 0.01U	3	
C3025		ECEV0JV470Q	E.CAPACITOR 6.3V 47U	1	
C3026		ECUM1H560JCN	C.CAPACITOR CH 50V 56P	1	
C3027		ECEV0JV470Q	E.CAPACITOR 6.3V 47U	1	
C3028-30		ECUM1H103KBN	C.CAPACITOR CH 50V 0.01U	3	
C3032,33		ECUM1H220JCN	C.CAPACITOR CH 50V 22P	2	
C3034		ECUM1H820JCN	C.CAPACITOR CH 50V 82P	1	
C3035		ECUM1H220JCN	C.CAPACITOR CH 50V 22P	1	
C3037		ECUM1H070DCN	C.CAPACITOR CH 50V 7P	1	
C3038		ECEV0JV470Q	E.CAPACITOR 6.3V 47U	1	
C3039,40		ECUM1H103KBN	C.CAPACITOR CH 50V 0.01U	2	
C3041		ECEV1CV100Q	E.CAPACITOR 16V 10U	1	
C3042		ECUM1H271JCN	C.CAPACITOR CH 50V 270P	1	
C3043		ECUM1H103KBN	C.CAPACITOR CH 50V 0.01U	1	
C3044		ECEV1CV100Q	E.CAPACITOR 16V 10U	1	
C3045-48		ECUM1H103KBN	C.CAPACITOR CH 50V 0.01U	4	
C3049		ECUM1H820JCN	C.CAPACITOR CH 50V 82P	1	
C3050,51		ECUM1H330JCN	C.CAPACITOR CH 50V 33P	2	
C3053		ECUM1H330JCN	C.CAPACITOR CH 50V 33P	1	
C3080,81		ECUM1H103KBN	C.CAPACITOR CH 50V 0.01U	2	
C3083		ECUM1H681JCN	C.CAPACITOR CH 50V 680P	1	
C3085		ECQV1H104JZ	P.CAPACITOR 50V 0.1U	1	
C3086		ECUM1H270JCN	C.CAPACITOR CH 50V 27P	1	
C3087		ECUM1E104ZFN	C.CAPACITOR CH 25V 0.1U	1	
C3088		ECUM1C105ZFN	C.CAPACITOR 16V 1U	1	
C3102		ECQV1H104JZ	P.CAPACITOR 50V 0.1U	1	
C3103		ECQV1H154JZ	P.CAPACITOR 50V 0.15U	1	
C3105,06		ECUM1C105ZFN	C.CAPACITOR 16V 1U	2	
C3107		ECUM1H820JCN	C.CAPACITOR CH 50V 82P	1	
C3108		ECUM1H101JCN	C.CAPACITOR CH 50V 100P	1	
C3109,10		ECUM1H103KBN	C.CAPACITOR CH 50V 0.01U	2	
C3111		ECUM1H102JCN	C.CAPACITOR CH 50V 1000P	1	
C3112-14		ECUM1H103ZFN	C.CAPACITOR 50V 0.01U	3	
C3115-20		ECUM1E104ZFN	C.CAPACITOR CH 25V 0.1U	6	
C3121		ECUM1H561JCN	C.CAPACITOR CH 50V 560P	1	
C3122,23		ECUM1H151JCN	C.CAPACITOR CH 50V 150P	2	
C3124		ECUM1H560JCN	C.CAPACITOR CH 50V 56P	1	
C3125-27		ECUM1E104ZFN	C.CAPACITOR CH 25V 0.1U	3	
C3129-32		ECEV0JV470Q	E.CAPACITOR 6.3V 47U	4	
C3133		ECEV1HV010Q	E.CAPACITOR 50V 1U	1	
C3135,36		ECUM1E104ZFN	C.CAPACITOR CH 25V 0.1U	2	
C3138		ECUM1E104ZFN	C.CAPACITOR CH 25V 0.1U	1	
C3139		ECUM1C105ZFN	C.CAPACITOR 16V 1U	1	
C3140		ECUM1H103KBN	C.CAPACITOR CH 50V 0.01U	1	
C3141		ECUM1H101JCN	C.CAPACITOR CH 50V 100P	1	
C3201		ECEV0JV470Q	E.CAPACITOR 6.3V 47U	1	
C3202		ECUM1C224KBM	C.CAPACITOR CH 16V 0.22U	1	
C3203		ECHU1C392GB	P.CAPACITOR 16V 3900P	1	
C3204		ECQV1H154JZ	P.CAPACITOR 50V 0.15U	1	
C3205		ECQV1H334JZ	P.CAPACITOR 50V 0.33U	1	
C3206		ECUM1E104ZFN	C.CAPACITOR CH 25V 0.1U	1	
C3207		ECUM1H220JCN	C.CAPACITOR CH 50V 22P	1	
C3208		ECUM1H103KBN	C.CAPACITOR CH 50V 0.01U	1	
C3209		ECUM1C105ZFN	C.CAPACITOR 16V 1U	1	

Ref.No.		Part No.	Part Name & Description	Pcs	Remarks
C3210		ECUM1E104ZFN	C.CAPACITOR CH 25V 0.1U	1	
C3211		ECUM1H103KBN	C.CAPACITOR CH 50V 0.01U	1	
C3212		ECUM1C224KBM	C.CAPACITOR CH 16V 0.22U	1	
C3213		ECUM1H102JCN	C.CAPACITOR CH 50V 1000P	1	
C3214,15		ECUM1H103KBN	C.CAPACITOR CH 50V 0.01U	2	
C3216		ECUM1E104ZFN	C.CAPACITOR CH 25V 0.1U	1	
C3217,18		ECUM1H103KBN	C.CAPACITOR CH 50V 0.01U	2	
C3220		ECEV0GV101Q	E.CAPACITOR 4V 100U	1	
C3221		ECUM1E104ZFN	C.CAPACITOR CH 25V 0.1U	1	
C3223		ECUM1H152KBN	C.CAPACITOR CH 50V 1500P	1	
C3224		ECUM1C224KBM	C.CAPACITOR CH 16V 0.22U	1	
C3225		ECUM1H103ZFN	C.CAPACITOR 50V 0.01U	1	
C3226,27		ECEV0JV470Q	E.CAPACITOR 6.3V 47U	2	
C3228		ECUM1H471JCN	C.CAPACITOR CH 50V 470P	1	
C3229,30		ECUM1H561JCN	C.CAPACITOR CH 50V 560P	2	
C3231		ECEV0JV330Q	E.CAPACITOR 6.3V 33U	1	
C3232		ECUM1H330JCN	C.CAPACITOR CH 50V 33P	1	
C3233		ECEV1EV4R7Q	E.CAPACITOR 25V 4.7U	1	
C3234,35		ECEV0JV470Q	E.CAPACITOR 6.3V 47U	2	
C3237		ECUM1H103ZFN	C.CAPACITOR 50V 0.01U	1	
C3239-41		ECEV0JV470Q	E.CAPACITOR 6.3V 47U	3	
C3242		ECEV1CV100Q	E.CAPACITOR 16V 10U	1	
C3244,45		ECEV1EV4R7Q	E.CAPACITOR 25V 4.7U	2	
C3246		ECUM1C105ZFN	C.CAPACITOR 16V 1U	1	
C3247		ECEV1HVR47Q	E.CAPACITOR 50V 0.47U	1	
C3248		ECUM1C224KBM	C.CAPACITOR CH 16V 0.22U	1	
C3251		ECUM1H070DCN	C.CAPACITOR CH 50V 7P	1	
C3253,54		ECUM1H220JCN	C.CAPACITOR CH 50V 22P	2	
C3255		ECEV0JV470Q	E.CAPACITOR 6.3V 47U	1	
C3256-58		ECUM1C224KBM	C.CAPACITOR CH 16V 0.22U	3	
C3259		ECUM1H103ZFN	C.CAPACITOR 50V 0.01U	1	
C3260		ECUM1H471JCN	C.CAPACITOR CH 50V 470P	1	
C3261		ECUM1C224KBM	C.CAPACITOR CH 16V 0.22U	1	
C3262		ECUM1H330JCN	C.CAPACITOR CH 50V 33P	1	
C3263		ECUM1H560JCN	C.CAPACITOR CH 50V 56P	1	
C3268		ECUM1C224KBM	C.CAPACITOR CH 16V 0.22U	1	
C3269		ECEV0JV470Q	E.CAPACITOR 6.3V 47U	1	
C3297		ECEV1CV100Q	E.CAPACITOR 16V 10U	1	
C3298		ECUM1H103ZFN	C.CAPACITOR 50V 0.01U	1	
C3299		ECUM1C224KBM	C.CAPACITOR CH 16V 0.22U	1	
C3401		ECEV0JV470Q	E.CAPACITOR 6.3V 47U	1	
C3402		ECUM1H103KBN	C.CAPACITOR CH 50V 0.01U	1	
C3404-06		ECUM1H103KBN	C.CAPACITOR CH 50V 0.01U	3	
C3443-46		ECUM1H103KBN	C.CAPACITOR CH 50V 0.01U	4	
C3447,48		ECUM1H150JCN	C.CAPACITOR CH 50V 15P	2	
C3449-65		ECUM1H103ZFN	C.CAPACITOR 50V 0.01U	17	
C3466		ECEV1CV100Q	E.CAPACITOR 16V 10U	1	
C3467		ECEV1HV2R2Q	E.CAPACITOR 50V 2.2U	1	
C3468-71		ECEV0JV220Q	E.CAPACITOR 6.3V 22U	4	
C3472		ECEV0JV470Q	E.CAPACITOR 6.3V 47U	1	
C3473		ECEV1CV100Q	E.CAPACITOR 16V 10U	1	
C3474		ECUM1H223KBN	C.CAPACITOR 50V 0.022U	1	
C3475		ECUM1H101JCN	C.CAPACITOR CH 50V 100P	1	
C3476		ECUM1H220JCN	C.CAPACITOR CH 50V 22P	1	
C3478		ECUM1H121JCN	C.CAPACITOR CH 50V 120P	1	
C3479		ECUM1E104ZFN	C.CAPACITOR CH 25V 0.1U	1	
C3501		ECEV0JV101Q	E.CAPACITOR 6.3V 100U	1	
C3502		ECUM1E104ZFN	C.CAPACITOR CH 25V 0.1U	1	
C3503		ECEV0GV101Q	E.CAPACITOR 4V 100U	1	
C3504		ECEV0JV470Q	E.CAPACITOR 6.3V 47U	1	
C3505		ECUM1H103ZFN	C.CAPACITOR 50V 0.01U	1	
C3506		ECUM1E104ZFN	C.CAPACITOR CH 25V 0.1U	1	
C3507		ECUM1H103ZFN	C.CAPACITOR 50V 0.01U	1	
C3508		ECEV0GV101Q	E.CAPACITOR 4V 100U	1	
C3602		ECUM1E104ZFN	C.CAPACITOR CH 25V 0.1U	1	
C3603		ECUM1H470JCN	C.CAPACITOR CH 50V 47P	1	
C3604		ECUM1E104ZFN	C.CAPACITOR CH 25V 0.1U	1	
C3605		ECUM1H470JCN	C.CAPACITOR CH 50V 47P	1	
D3002,03		MA151K	DIODE	2	<R>
D3201,02		1SS283	DIODE	2	<R>
D3203		MA151K	DIODE	1	<R>
D3206		MA151K	DIODE	1	<R>

Ref.No.		Part No.	Part Name & Description	Pcs	Remarks
D3401		MA28W-B	DIODE	1	<R>
D3411		MA151K	DIODE	1	<R>
D3501		11EQS04	DIODE	1	<R>
FL3001		ELB4R031	FILTER	1	
FL3101		VLF1050	FILTER	1	
FL3102,03		VLF1155	FILTER	2	
FL3201		VLF1045	FILTER	1	
FL3202		VLF1156	FILTER	1	
FL3203		VLF1157	FILTER	1	
FL3204		VLF1156	FILTER	1	
FL3205		VLF1157	FILTER	1	
FL3401		VLF0526	FILTER	1	
FL3402-04		VLF0523	FILTER	3	
FL3405		VLF0526	FILTER	1	
FL3406		VLF1156	FILTER	1	
FL3407		VLF1157	FILTER	1	
IC3001		MC74HC86F	IC	1	<R>
IC3002		TC7S04F	IC	1	<R>
IC3003		NJM78L05UA	IC	1	<R>
IC3004		M52083FP	IC	1	<R>
IC3005		LM324NS	IC	1	<R>
IC3006		AN6308S	IC	1	<R>
IC3007		MC14052BF	IC	1	<R>
IC3010		AN78N05	IC	1	<R>
IC3101		NJM2234MA	IC	1	<R>
IC3102		TL8823F	IC	1	<R>
IC3103		NJM2233BMA	IC	1	<R>
IC3201		NJM592M8	IC	1	<R>
IC3202		MC14577CP	IC	1	<R>
IC3203		NJM2235MA	IC	1	<R>
IC3204		TC4W53F	IC	1	<R>
IC3205		TA75S01F	IC	1	<R>
IC3206		AN3296S	IC	1	<R>
IC3207		NJM78L05UA	IC	1	<R>
IC3208		TK16031M	IC	1	<R>
IC3401		MC74HC157AF	IC	1	<R>
IC3402,03		MC74HC163AF	IC	2	<R>
IC3404		MC74HC32AF	IC	1	<R>
IC3405		MC74HC74AF	IC	1	<R>
IC3406		TC7WU04F	IC	1	<R>
IC3407		MC74HC08AF	IC	1	<R>
IC3408		MC74HC74AF	IC	1	<R>
IC3409		MC74HC04AF	IC	1	<R>
IC3410		MN4538BS	IC	1	<R>
IC3411		HM63021FP	IC	1	<R>
IC3412		MC74HC541AF	IC	1	<R>
IC3413		MB40778PF	IC	1	<R>
IC3414		MC74HC32AF	IC	1	<R>
IC3416		TC4S30F	IC	1	<R>
IC3417		MC14577CP	IC	1	<R>
IC3418		CXD1175AM	IC	1	<R>
IC3419		MC74HC74AF	IC	1	<R>
IC3420		TC7S08F	IC	1	<R>
IC3421		TC7S04F	IC	1	<R>
L3001		VLQ0163J181	COIL 180UH	1	
L3002		VLQ0163J390	COIL 39UH	1	
L3003		VLQ0163J330	COIL 33UH	1	
L3006		VLQ0163J270	COIL 27UH	1	
L3007,08		VLQ0163J330	COIL 33UH	2	
L3009		VLQ0163J100	COIL 10UH	1	
L3010		VLQ0163J120	COIL 12UH	1	
L3011		VLQ0163J180	COIL 18UH	1	
L3012,13		VLQ0163J100	COIL 10UH	2	
L3014		VLQ0163J101	COIL 100UH	1	
L3015-17		VLQ0319K101	COIL 100UH	3	
L3018		VLQ0133J271	COIL 270UH	1	

Ref.No.	Part No.	Part Name & Description	Pcs	Remarks
L3019	VLQ0163J101	COIL 100UH	1	
L3020	VLQ0133J821	COIL 820UH	1	
L3021	VLQ0163J151	COIL 150UH	1	
L3022	VLQ0163J390	COIL 39UH	1	
L3023	VLQ0163J820	COIL 82UH	1	
L3101	VLQ0133J331	COIL 330UH	1	
L3102	VLQ0133J561	COIL 560UH	1	
L3103	VLQ0133J391	COIL 390UH	1	
L3104	VLQ0133J561	COIL 560UH	1	
L3105	VLQ0133J102	COIL 1000UH	1	
L3107	VLQ0163J151	COIL 150UH	1	
L3108	VLQ0163J220	COIL 22UH	1	
L3109,10	VLQ0163J330	COIL 33UH	2	
L3111,12	VLQ0319K101	COIL 100UH	2	
L3113	VLQ0133J681	COIL 680UH	1	
L3114	VLQ0163J150	COIL 15UH	1	
L3203	VLQ0133J271	COIL 270UH	1	
L3205-08	VLQ0319K101	COIL 100UH	4	
L3211	VLQ0163J560	COIL 56UH	1	
L3212	VLQ0163J270	COIL 27UH	1	
L3225	VLQ0319K101	COIL 100UH	1	
L3317	VLQ0319K101	COIL 100UH	1	
L3401-05	VLQ0319K101	COIL 100UH	5	
P3002	VJP3080	CONNECTOR (MALE)	1	
P3931	VJP3176B100	CONNECTOR	1	
Q3001	MSD601-R	TRANSISTOR	1	<R>
Q3002	2SD1328-S	TRANSISTOR	1	<R>
Q3004	MSC2295-B	TRANSISTOR	1	<R>
Q3005	2SK374-R	TRANSISTOR	1	<R>
Q3006,07	MSD601-R	TRANSISTOR	2	<R>
Q3008,09	MSC2295-B	TRANSISTOR	2	<R>
Q3010	MSB709-R	TRANSISTOR	1	<R>
Q3011	MSC2295-B	TRANSISTOR	1	<R>
Q3013,14	MSC2295-B	TRANSISTOR	2	<R>
Q3015	MSB709-R	TRANSISTOR	1	<R>
Q3016	MSC2295-B	TRANSISTOR	1	<R>
Q3101	MSC2295-B	TRANSISTOR	1	<R>
Q3104,05	MSC2295-B	TRANSISTOR	2	<R>
Q3106	MSB709-R	TRANSISTOR	1	<R>
Q3107	MSC2295-B	TRANSISTOR	1	<R>
Q3108	MSB709-R	TRANSISTOR	1	<R>
Q3109	MSC2295-B	TRANSISTOR	1	<R>
Q3111	MSB709-R	TRANSISTOR	1	<R>
Q3112	MSD601-R	TRANSISTOR	1	<R>
Q3113	MSC2295-B	TRANSISTOR	1	<R>
Q3114,15	MSD601-R	TRANSISTOR	2	<R>
Q3116	MSC2295-B	TRANSISTOR	1	<R>
Q3117,18	MSD601-R	TRANSISTOR	2	<R>
Q3119	MSC2295-B	TRANSISTOR	1	<R>
Q3120	MSD601-R	TRANSISTOR	1	<R>
Q3121	XN1213	TRANSISTOR-TRANSISTOR	1	<R>
Q3122	MSB709-R	TRANSISTOR	1	<R>
Q3201-03	MSD601-R	TRANSISTOR	3	<R>
Q3204-08	MSC2295-B	TRANSISTOR	5	<R>
Q3210,11	MSD601-R	TRANSISTOR	2	<R>
Q3213	XN1504	TRANSISTOR	1	<R>
Q3214-17	MSD601-R	TRANSISTOR	4	<R>
Q3219	MSD601-R	TRANSISTOR	1	<R>
Q3221	MSD601-R	TRANSISTOR	1	<R>
Q3222	MSC2295-B	TRANSISTOR	1	<R>
Q3223	MSD601-R	TRANSISTOR	1	<R>
Q3224	MSC2295-B	TRANSISTOR	1	<R>
Q3401	MSD601-R	TRANSISTOR	1	<R>
Q3601,02	MSD601-R	TRANSISTOR	2	<R>
Q3603	MSC2295-B	TRANSISTOR	1	<R>
Q3604	2SA1022-C	TRANSISTOR	1	<R>

Ref.No.	Part No.	Part Name & Description	Pcs	Remarks
QR3003,04	MRN1404	TRANSISTOR	2	<R>
QR3005	MRN2404	TRANSISTOR	1	<R>
QR3006	MRN1404	TRANSISTOR	1	<R>
QR3009	MRN2404	TRANSISTOR	1	<R>
QR3010	MRN1404	TRANSISTOR	1	<R>
QR3102	MRN2404	TRANSISTOR	1	<R>
QR3201,02	MRN1404	TRANSISTOR	2	<R>
QR3401	XN4501	TRANSISTOR-RESISTOR	1	<R>
QR3601	MRN1404	TRANSISTOR	1	<R>
R3001	ERJ6GEYJ271	M.RESISTOR CH 1/10W 270	1	
R3002	ERJ6GEYJ681	M.RESISTOR CH 1/10W 680	1	
R3003	ERJ6GEYJ105	M.RESISTOR CH 1/10W 1M	1	
R3004	ERJ6GEYJ103	M.RESISTOR CH 1/10W 10K	1	
R3009	ERJ6GEYJ182	M.RESISTOR CH 1/10W 1.8K	1	
R3010,11	ERJ6GEYJ103	M.RESISTOR CH 1/10W 10K	2	
R3012	ERJ6GEYJ820	M.RESISTOR CH 1/10W 82	1	
R3013	ERJ6GEYG472	M.RESISTOR CH 1/10W 4.7K	1	
R3015	ERJ6GEYJ183	M.RESISTOR CH 1/10W 18K	1	
R3016	ERJ6GEY0R00	M.RESISTOR CH 1/10W 0	1	
R3018	ERJ6GEYG472	M.RESISTOR CH 1/10W 4.7K	1	
R3019	ERJ6GEYJ271	M.RESISTOR CH 1/10W 270	1	
R3020	ERJ6GEYJ821	M.RESISTOR CH 1/10W 820	1	
R3021	ERJ6GEYG472	M.RESISTOR CH 1/10W 4.7K	1	
R3022	ERJ6GEYJ103	M.RESISTOR CH 1/10W 10K	1	
R3023	ERJ6GEYG472	M.RESISTOR CH 1/10W 4.7K	1	
R3025	ERJ6GEYJ103	M.RESISTOR CH 1/10W 10K	1	
R3026	ERJ6GEYJ332	M.RESISTOR CH 1/10W 3.3K	1	
R3027	ERJ6GEYJ683	M.RESISTOR CH 1/10W 68K	1	
R3029	ERJ6GEYJ473	M.RESISTOR CH 1/10W 47K	1	
R3030	ERJ6GEYJ102	M.RESISTOR CH 1/10W 1K	1	
R3031-33	ERJ6GEYJ103	M.RESISTOR CH 1/10W 10K	3	
R3034	ERJ6GEYJ102	M.RESISTOR CH 1/10W 1K	1	
R3036	ERJ6GEYJ102	M.RESISTOR CH 1/10W 1K	1	
R3037	ERJ6GEYJ105	M.RESISTOR CH 1/10W 1M	1	
R3038	ERJ6GEYJ393	M.RESISTOR CH 1/10W 39K	1	
R3039	ERJ6GEYJ103	M.RESISTOR CH 1/10W 10K	1	
R3040	ERJ6GEYJ473	M.RESISTOR CH 1/10W 47K	1	
R3041	ERJ6GEYJ563	M.RESISTOR CH 1/10W 56K	1	
R3042	ERJ6GEYJ681	M.RESISTOR CH 1/10W 680	1	
R3044-46	ERJ6GEYJ102	M.RESISTOR CH 1/10W 1K	3	
R3047	ERJ6GEYJ121	M.RESISTOR CH 1/10W 120	1	
R3048	ERJ6GEYJ122	M.RESISTOR CH 1/10W 1.2K	1	
R3049,50	ERJ6GEYJ561	M.RESISTOR CH 1/10W 560	2	
R3051	ERJ6GEYJ272	M.RESISTOR CH 1/10W 2.7K	1	
R3052	ERJ6GEYJ102	M.RESISTOR CH 1/10W 1K	1	
R3053	ERJ6GEYJ122	M.RESISTOR CH 1/10W 1.2K	1	
R3054	ERJ6GEYJ221	M.RESISTOR CH 1/10W 220	1	
R3055	ERJ6GEYJ561	M.RESISTOR CH 1/10W 560	1	
R3056	ERJ6GEYJ102	M.RESISTOR CH 1/10W 1K	1	
R3057	ERJ6GEYG472	M.RESISTOR CH 1/10W 4.7K	1	
R3058,59	ERJ6GEYJ102	M.RESISTOR CH 1/10W 1K	2	
R3060	ERJ6GEYJ682	M.RESISTOR CH 1/10W 6.8K	1	
R3061	ERJ6GEYJ152	M.RESISTOR CH 1/10W 1.5K	1	
R3065	ERJ6GEYJ471	M.RESISTOR CH 1/10W 470	1	
R3067,68	ERJ6GEYJ102	M.RESISTOR CH 1/10W 1K	2	
R3069	ERJ6GEYJ561	M.RESISTOR CH 1/10W 560	1	
R3070	ERJ6GEYJ102	M.RESISTOR CH 1/10W 1K	1	
R3071	ERJ6GEYJ103	M.RESISTOR CH 1/10W 10K	1	
R3072	ERJ6GEYJ182	M.RESISTOR CH 1/10W 1.8K	1	
R3073	ERJ6GEYJ223	M.RESISTOR CH 1/10W 22K	1	
R3074	ERJ6GEYJ102	M.RESISTOR CH 1/10W 1K	1	
R3075	ERJ6GEYJ561	M.RESISTOR CH 1/10W 560	1	
R3077	ERJ6GEY0R00	M.RESISTOR CH 1/10W 0	1	
R3079	ERJ6GEYJ222	M.RESISTOR CH 1/10W 2.2K	1	
R3080	ERJ6GEYJ224	M.RESISTOR CH 1/10W 220K	1	
R3081	ERJ6GEYJ561	M.RESISTOR CH 1/10W 560	1	
R3082	ERJ6GEYJ681	M.RESISTOR CH 1/10W 680	1	
R3083	ERJ6GEYJ102	M.RESISTOR CH 1/10W 1K	1	
R3084	ERJ6GEYJ681	M.RESISTOR CH 1/10W 680	1	
R3085	ERJ6GEYJ102	M.RESISTOR CH 1/10W 1K	1	
R3086	ERJ6GEYJ331	M.RESISTOR CH 1/10W 330	1	
R3089	ERJ6GEYJ152	M.RESISTOR CH 1/10W 1.5K	1	

Ref.No.		Part No.	Part Name & Description	Pcs	Remarks
R3090		ERJ6GEYJ102	M.RESISTOR CH 1/10W 1K	1	
R3104-14		ERJ6GEYJ102	M.RESISTOR CH 1/10W 1K	11	
R3115		ERJ6GEYJ272	M.RESISTOR CH 1/10W 2.7K	1	
R3116,17		ERJ6GEYJ102	M.RESISTOR CH 1/10W 1K	2	
R3118		ERJ6GEYJ151	M.RESISTOR CH 1/10W 150	1	
R3119-28		ERJ6GEYJ152	M.RESISTOR CH 1/10W 1.5K	10	
R3129		ERJ6GEYG153	M.RESISTOR CH 1/10W 15K	1	
R3130		ERJ6GEYJ272	M.RESISTOR CH 1/10W 2.7K	1	
R3131,32		ERJ6GEYJ222	M.RESISTOR CH 1/10W 2.2K	2	
R3133,34		ERJ6GEYJ102	M.RESISTOR CH 1/10W 1K	2	
R3135		ERJ6GEYJ182	M.RESISTOR CH 1/10W 1.8K	1	
R3136-39		ERJ6GEYJ223	M.RESISTOR CH 1/10W 22K	4	
R3140		ERJ6GEYJ330	M.RESISTOR CH 1/10W 33	1	
R3141,42		ERJ6GEYG333	M.RESISTOR CH 1/10W 33K	2	
R3143		ERJ6GEYJ222	M.RESISTOR CH 1/10W 2.2K	1	
R3144		ERJ6GEYJ393	M.RESISTOR CH 1/10W 39K	1	
R3145		ERJ6GEYJ470	M.RESISTOR CH 1/10W 47	1	
R3146		ERJ6GEYJ272	M.RESISTOR CH 1/10W 2.7K	1	
R3147		ERJ6GEYJ471	M.RESISTOR CH 1/10W 470	1	
R3149,50		ERJ6GEYG472	M.RESISTOR CH 1/10W 4.7K	2	
R3151		ERJ6GEYJ471	M.RESISTOR CH 1/10W 470	1	
R3152		ERJ6GEYJ391	M.RESISTOR CH 1/10W 390	1	
R3153		ERJ6GEYJ681	M.RESISTOR CH 1/10W 680	1	
R3154		ERJ6GEY0R00	M.RESISTOR CH 1/10W 0	1	
R3156		ERJ6GEYJ152	M.RESISTOR CH 1/10W 1.5K	1	
R3157,58		ERJ6GEYJ272	M.RESISTOR CH 1/10W 2.7K	2	
R3159		ERJ6GEYJ102	M.RESISTOR CH 1/10W 1K	1	
R3200		ERJ6GEYJ271	M.RESISTOR CH 1/10W 270	1	
R3201		ERJ6GEY0R00	M.RESISTOR CH 1/10W 0	1	
R3203-05		ERJ6GEYJ102	M.RESISTOR CH 1/10W 1K	3	
R3206		ERJ6GEYG153	M.RESISTOR CH 1/10W 15K	1	
R3207		ERJ6GEYJ223	M.RESISTOR CH 1/10W 22K	1	
R3208		ERJ6GEYJ391	M.RESISTOR CH 1/10W 390	1	
R3209		ERJ6GEYG333	M.RESISTOR CH 1/10W 33K	1	
R3210		ERJ6GEYJ222	M.RESISTOR CH 1/10W 2.2K	1	
R3211		ERJ6GEY0R00	M.RESISTOR CH 1/10W 0	1	
R3212		ERJ6GEYG153	M.RESISTOR CH 1/10W 15K	1	
R3213		ERJ6GEYJ561	M.RESISTOR CH 1/10W 560	1	
R3214-16		ERJ6GEYJ102	M.RESISTOR CH 1/10W 1K	3	
R3217		ERJ6GEYJ271	M.RESISTOR CH 1/10W 270	1	
R3218		ERJ6GEYJ103	M.RESISTOR CH 1/10W 10K	1	
R3219		ERJ6GEYJ102	M.RESISTOR CH 1/10W 1K	1	
R3220		ERJ6GEYJ820	M.RESISTOR CH 1/10W 82	1	
R3221-23		ERJ6GEYJ103	M.RESISTOR CH 1/10W 10K	3	
R3224		ERJ6GEYJ393	M.RESISTOR CH 1/10W 39K	1	
R3225		ERJ6GEYJ113	M.RESISTOR CH 1/10W 11K	1	
R3226		ERJ6GEYJ330	M.RESISTOR CH 1/10W 33	1	
R3227		ERJ6GEYJ104	M.RESISTOR CH 1/10W 100K	1	
R3228		ERJ6GEYJ103	M.RESISTOR CH 1/10W 10K	1	
R3229		ERJ6GEYG333	M.RESISTOR CH 1/10W 33K	1	
R3230		ERJ6GEYJ103	M.RESISTOR CH 1/10W 10K	1	
R3231		ERJ6GEYJ182	M.RESISTOR CH 1/10W 1.8K	1	
R3232		ERJ6GEYJ223	M.RESISTOR CH 1/10W 22K	1	
R3233		ERJ6GEYG472	M.RESISTOR CH 1/10W 4.7K	1	
R3234		ERJ6GEYJ103	M.RESISTOR CH 1/10W 10K	1	
R3235		ERJ6GEYJ471	M.RESISTOR CH 1/10W 470	1	
R3236,37		ERJ6GEYG153	M.RESISTOR CH 1/10W 15K	2	
R3238		ERJ6GEYJ473	M.RESISTOR CH 1/10W 47K	1	
R3239		ERJ6GEYJ151	M.RESISTOR CH 1/10W 150	1	
R3240		ERJ6GEYJ103	M.RESISTOR CH 1/10W 10K	1	
R3241		ERJ6GEYJ562	M.RESISTOR CH 1/10W 5.6K	1	
R3242		ERJ6GEYJ103	M.RESISTOR CH 1/10W 10K	1	
R3243		ERJ6GEYJ471	M.RESISTOR CH 1/10W 470	1	
R3244		ERJ6GEYJ561	M.RESISTOR CH 1/10W 560	1	
R3245		ERJ6GEYG153	M.RESISTOR CH 1/10W 15K	1	
R3246		ERJ6GEYJ331	M.RESISTOR CH 1/10W 330	1	
R3247-50		ERJ6GEYJ332	M.RESISTOR CH 1/10W 3.3K	4	
R3251		ERJ6GEYJ182	M.RESISTOR CH 1/10W 1.8K	1	
R3252		ERJ6GEYJ102	M.RESISTOR CH 1/10W 1K	1	
R3253		ERJ6GEYJ332	M.RESISTOR CH 1/10W 3.3K	1	
R3254		ERJ6GEYJ102	M.RESISTOR CH 1/10W 1K	1	
R3255		ERJ6GEYJ393	M.RESISTOR CH 1/10W 39K	1	
R3256		ERJ6GEYJ332	M.RESISTOR CH 1/10W 3.3K	1	
R3257,58		ERJ6GEYJ471	M.RESISTOR CH 1/10W 470	2	
R3259		ERJ6GEYJ223	M.RESISTOR CH 1/10W 22K	1	

Ref.No.		Part No.	Part Name & Description	Pcs	Remarks
R3260		ERJ6GEY0R00	M.RESISTOR CH 1/10W 0	1	
R3261		ERJ6GEYJ683	M.RESISTOR CH 1/10W 68K	1	
R3262		ERJ6GEYJ103	M.RESISTOR CH 1/10W 10K	1	
R3263		ERJ6GEYJ222	M.RESISTOR CH 1/10W 2.2K	1	
R3264		ERJ6GEYJ474	M.RESISTOR CH 1/10W 470K	1	
R3265		ERJ6GEYJ681	M.RESISTOR CH 1/10W 680	1	
R3266		ERJ6GEYJ561	M.RESISTOR CH 1/10W 560	1	
R3267		ERJ6GEYJ331	M.RESISTOR CH 1/10W 330	1	
R3268		ERJ6GEYG153	M.RESISTOR CH 1/10W 15K	1	
R3269		ERJ6GEYJ103	M.RESISTOR CH 1/10W 10K	1	
R3270		ERJ6GEYJ102	M.RESISTOR CH 1/10W 1K	1	
R3271		ERJ6GEYJ682	M.RESISTOR CH 1/10W 6.8K	1	
R3272		ERJ6GEYJ683	M.RESISTOR CH 1/10W 68K	1	
R3273		ERJ6GEYJ684	M.RESISTOR CH 1/10W 680K	1	
R3274		ERJ6GEYJ753	M.RESISTOR CH 1/10W 75K	1	
R3275		ERJ6GEY0R00	M.RESISTOR CH 1/10W 0	1	
R3276		VRE0034E473	M.RESISTOR CH 1/10W 47K	1	
R3277		ERJ6GEYG153	M.RESISTOR CH 1/10W 15K	1	
R3278		ERJ6GEYJ103	M.RESISTOR CH 1/10W 10K	1	
R3279,80		ERJ6GEYJ561	M.RESISTOR CH 1/10W 560	2	
R3281,82		ERJ6GEYJ102	M.RESISTOR CH 1/10W 1K	2	
R3283		ERJ6GEYJ152	M.RESISTOR CH 1/10W 1.5K	1	
R3284		ERJ6GEYJ102	M.RESISTOR CH 1/10W 1K	1	
R3285		ERJ6GEYJ821	M.RESISTOR CH 1/10W 820	1	
R3286		ERJ6GEYJ105	M.RESISTOR CH 1/10W 1M	1	
R3287		ERJ6GEYJ223	M.RESISTOR CH 1/10W 22K	1	
R3288		ERJ6GEYJ222	M.RESISTOR CH 1/10W 2.2K	1	
R3289		ERJ6GEYJ103	M.RESISTOR CH 1/10W 10K	1	
R3290		ERJ6GEYJ105	M.RESISTOR CH 1/10W 1M	1	
R3291		ERJ6GEYJ561	M.RESISTOR CH 1/10W 560	1	
R3292		ERJ6GEYJ151	M.RESISTOR CH 1/10W 150	1	
R3293		ERJ6GEYJ222	M.RESISTOR CH 1/10W 2.2K	1	
R3294		ERJ6GEYG153	M.RESISTOR CH 1/10W 15K	1	
R3295		ERJ6GEYJ152	M.RESISTOR CH 1/10W 1.5K	1	
R3296		ERJ6GEYJ103	M.RESISTOR CH 1/10W 10K	1	
R3297		ERJ6GEYG472	M.RESISTOR CH 1/10W 4.7K	1	
R3298,99		ERJ6GEYJ562	M.RESISTOR CH 1/10W 5.6K	2	
R3300		ECUM1C105ZFN	C.CAPACITOR 16V 1U	1	
R3317		ERJ6GEYJ103	M.RESISTOR CH 1/10W 10K	1	
R3403		ERJ6GEY0R00	M.RESISTOR CH 1/10W 0	1	
R3405-08		ERJ6GEYJ473	M.RESISTOR CH 1/10W 47K	4	
R3409		ERJ6GEY0R00	M.RESISTOR CH 1/10W 0	1	
R3411,12		ERJ6GEY0R00	M.RESISTOR CH 1/10W 0	2	
R3413-16		ERJ6GEYJ473	M.RESISTOR CH 1/10W 47K	4	
R3418		ERJ6GEY0R00	M.RESISTOR CH 1/10W 0	1	
R3419		ERJ6GEYJ100	M.RESISTOR CH 1/10W 10	1	
R3420,21		ERJ6GEYJ101	M.RESISTOR CH 1/10W 100	2	
R3422		ERJ6GEYJ102	M.RESISTOR CH 1/10W 1K	1	
R3423		ERJ6GEYJ564	M.RESISTOR CH 1/10W 560K	1	
R3424,25		ERJ6GEYG103	M.RESISTOR CH 1/10W 10K	2	
R3426		ERJ6GEYJ105	M.RESISTOR CH 1/10W 1M	1	
R3427		ERJ6GEYG302	M.RESISTOR CH 1/10W 3K	1	
R3428		ERJ6GEYJ473	M.RESISTOR CH 1/10W 47K	1	
R3430-32		ERJ6GEYG472	M.RESISTOR CH 1/10W 4.7K	3	
R3440-44		ERJ6GEYG472	M.RESISTOR CH 1/10W 4.7K	5	
R3447-54		ERJ6GEYJ680	M.RESISTOR CH 1/10W 68	8	
R3456-60		ERJ6GEYJ680	M.RESISTOR CH 1/10W 68	5	
R3461		ERJ6GEYG333	M.RESISTOR CH 1/10W 33K	1	
R3462		ERJ6GEYG153	M.RESISTOR CH 1/10W 15K	1	
R3463-65		ERJ6GEYJ680	M.RESISTOR CH 1/10W 68	3	
R3466		ERJ6GEYJ682	M.RESISTOR CH 1/10W 6.8K	1	
R3468		ERJ6GEY0R00	M.RESISTOR CH 1/10W 0	1	
R3469		ERJ6GEYG472	M.RESISTOR CH 1/10W 4.7K	1	
R3471		ERJ6GEYJ152	M.RESISTOR CH 1/10W 1.5K	1	
R3472		ERJ6GEYJ102	M.RESISTOR CH 1/10W 1K	1	
R3473,74		ERJ6GEYJ561	M.RESISTOR CH 1/10W 560	2	
R3475		ERJ6GEYJ102	M.RESISTOR CH 1/10W 1K	1	
R3477		ERJ6GEYJ102	M.RESISTOR CH 1/10W 1K	1	
R3478		ERJ6GEYJ222	M.RESISTOR CH 1/10W 2.2K	1	
R3480		ERJ6GEYJ470	M.RESISTOR CH 1/10W 47	1	
R3481,82		ERJ6GEY0R00	M.RESISTOR CH 1/10W 0	2	
R3501		ERJ6GEY0R00	M.RESISTOR CH 1/10W 0	1	
R3504		ERJ6GEYG153	M.RESISTOR CH 1/10W 15K	1	
R3505		ERJ6GEYJ223	M.RESISTOR CH 1/10W 22K	1	
R3506		ERJ6GEYJ682	M.RESISTOR CH 1/10W 6.8K	1	

Ref.No.	Part No.	Part Name & Description	Pcs	Remarks
R3507	ERJ6GEYJ332	M.RESISTOR CH 1/10W 3.3K	1	
R3508	ERJ6GEYJ102	M.RESISTOR CH 1/10W 1K	1	
R3509	ERJ6GEYJ103	M.RESISTOR CH 1/10W 10K	1	
R3510	ERJ6GEYJ183	M.RESISTOR CH 1/10W 18K	1	
R3511	ERJ6GEYJ273	M.RESISTOR CH 1/10W 27K	1	
R3601	ERJ6GEYJ332	M.RESISTOR CH 1/10W 3.3K	1	
R3602	ERJ6GEYJ222	M.RESISTOR CH 1/10W 2.2K	1	
R3603	ERJ6GEYJ332	M.RESISTOR CH 1/10W 3.3K	1	
R3604	ERJ6GEYJ222	M.RESISTOR CH 1/10W 2.2K	1	
R3605,06	ERJ6GEYJ330	M.RESISTOR CH 1/10W 33	2	
R3607,08	ERJ6GEYJ561	M.RESISTOR CH 1/10W 560	2	
R3609	ERJ6GEYJ122	M.RESISTOR CH 1/10W 1.2K	1	
R3610	ERJ6GEYJ102	M.RESISTOR CH 1/10W 1K	1	
R3611	ERJ6GEYJ821	M.RESISTOR CH 1/10W 820	1	
R3614,15	ERJ6GEYJ223	M.RESISTOR CH 1/10W 22K	2	
SW3401,02	VSR0045	SWITCH	2	<R>
VR3001,02	EVM7JGA00B24	V.RESISTOR	2	
VR3003	EVN32CA00B24	VARIABLE 20K	1	
VR3004-08	EVN32CA00B54	V.RESISTOR 50K	5	
VR3101,02	EVM7DGA00B13	V.RESISTOR 1K	2	
VR3201,02	EVM7DGA00B13	V.RESISTOR 1K	2	
VR3401	EVN32CA00B24	VARIABLE 20K	1	
X3401	VSX0540	CRYSTAL OSCILLATOR	1	<R>
		MISCELLANEOUS		
E111	VSC2051	SHIELD CASE (MIDDLE)	1	
E112	VSC2052	SHIELD CASE (LOWER)	1	

Ref.No.	Part No.	Part Name & Description	Pcs	Remarks
	VEP03B44D	P.C.BOARD W/COMPONENT		AG-8600E
		VIDEO YC		
C3001	ECUM1H330JCN	C.CAPACITOR CH 50V 33P	1	
C3003-06	ECUM1H103ZFN	C.CAPACITOR 50V 0.01U	4	
C3008,09	ECUM1H103ZFN	C.CAPACITOR 50V 0.01U	2	
C3010	ECUM1H220JCN	C.CAPACITOR CH 50V 22P	1	
C3012	ECUM1H103ZFN	C.CAPACITOR 50V 0.01U	1	
C3013	ECUM1H330JCN	C.CAPACITOR CH 50V 33P	1	
C3014	ECUM1H050CCN	C.CAPACITOR CH 50V 5P	1	
C3020-22	ECUM1H103ZFN	C.CAPACITOR 50V 0.01U	3	
C3023	ECUM1E104ZFN	C.CAPACITOR CH 25V 0.1U	1	
C3024	ECUM1H103ZFN	C.CAPACITOR 50V 0.01U	1	
C3025	ECUM1H223KBN	C.CAPACITOR 50V 0.022U	1	
C3026	ECUM1C154KBN	C.CAPACITOR 16V 0.15U	1	
C3027	ECUM1E473KBN	C.CAPACITOR CH 25V 0.047U	1	
C3028,29	ECUM1H473ZFN	C.CAPACITOR CH 50V 0.047U	2	
C3030	ECEV1EN4R7Q	E.CAPACITOR 25V 4.7U	1	
C3032	ECUM1H221GCN	C.CAPACITOR CH 50V 220P	1	
C3033-35	ECUM1H271GCN	C.CAPACITOR CH 50V 270P	3	
C3038	ECQP1H561JZ	P.CAPACITOR 50V 560P	1	
C3039	ECUM1H820GCN	C.CAPACITOR CH 50V 82P	1	
C3040	ECQP1H911GZ	P.CAPACITOR 50V 910P	1	
C3042	ECUM1H080DCN	C.CAPACITOR CH 50V 8OP	1	
C3043	ECUM1H820JCN	C.CAPACITOR CH 50V 82P	1	
C3044	ECUM1H560JCN	C.CAPACITOR CH 50V 56P	1	
C3045	ECUM1H103ZFN	C.CAPACITOR 50V 0.01U	1	
C3047	ECUM1H103ZFN	C.CAPACITOR 50V 0.01U	1	
C3048	ECUM1H470JCN	C.CAPACITOR CH 50V 47P	1	
C3049	ECEV1CV100Q	E.CAPACITOR 16V 10U	1	
C3051-55	ECEV1CV100Q	E.CAPACITOR 16V 10U	5	
C3056-61	ECEV1EV4R7Q	E.CAPACITOR 25V 4.7U	6	
C3062	ECEV0GV470Q	E.CAPACITOR 4V 47U	1	
C3063	ECEV1CV100Q	E.CAPACITOR 16V 10U	1	
C3064	ECEV0JV220Q	E.CAPACITOR 6.3V 22U	1	
C3065	ECEV0JV470Q	E.CAPACITOR 6.3V 47U	1	
C3066,67	ECEV1CV220Q	E.CAPACITOR 16V 22U	2	
C3068,69	ECEV0JV470Q	E.CAPACITOR 6.3V 47U	2	
C3070	ECEV1HV010Q	E.CAPACITOR 50V 1U	1	
C3072-76	ECUM1H103ZFN	C.CAPACITOR 50V 0.01U	5	
C3078	ECEV0JV470Q	E.CAPACITOR 6.3V 47U	1	
C3079	ECEV1CV470Q	E.CAPACITOR CH 16V 47U	1	
C3080	ECEV0JV470Q	E.CAPACITOR 6.3V 47U	1	
C3083	ECEV0JV470Q	E.CAPACITOR 6.3V 47U	1	
C3084,85	ECUM1H103ZFN	C.CAPACITOR 50V 0.01U	2	
C3086,87	ECUM1C105ZFN	C.CAPACITOR 16V 1U	2	
C3088	ECUM1E104ZFN	C.CAPACITOR CH 25V 0.1U	1	
C3089	ECEV1EN4R7Q	E.CAPACITOR 25V 4.7U	1	
C3091,92	ECUM1E104ZFN	C.CAPACITOR CH 25V 0.1U	2	
C3093	ECUM1H150JCN	C.CAPACITOR CH 50V 15P	1	
C3094,95	ECUM1H101JCN	C.CAPACITOR CH 50V 100P	2	
C3096	ECUM1H103ZFN	C.CAPACITOR 50V 0.01U	1	
C3097	ECUM1H150JCN	C.CAPACITOR CH 50V 15P	1	
C3100	ECUM1E104ZFN	C.CAPACITOR CH 25V 0.1U	1	
C3101	ECUM1C105ZFN	C.CAPACITOR 16V 1U	1	
C3102	ECUM1E104ZFN	C.CAPACITOR CH 25V 0.1U	1	
C3112	ECUM1C154KBN	C.CAPACITOR 16V 0.15U	1	
C3202	ECUM1H271JCN	C.CAPACITOR CH 50V 270P	1	
C3203-05	ECUM1H103ZFN	C.CAPACITOR 50V 0.01U	3	
C3206	ECUM1C105ZFN	C.CAPACITOR 16V 1U	1	
C3207	ECUM1H101JCN	C.CAPACITOR CH 50V 100P	1	
C3208	ECUM1E104KBN	C.CAPACITOR CH 25V 0.1U	1	
C3209	ECUM1H102JCN	C.CAPACITOR CH 50V 1000P	1	
C3210	ECUM1H050CCN	C.CAPACITOR CH 50V 5P	1	
C3211	ECUM1H120JUN	C.CAPACITOR 50V 12P	1	
C3212	ECUM1H103ZFN	C.CAPACITOR 50V 0.01U	1	
C3213	ECEV0JV470Q	E.CAPACITOR 6.3V 47U	1	
C3214-16	ECUM1H103ZFN	C.CAPACITOR 50V 0.01U	3	
C3217	ECEV1HV3R3Q	E.CAPACITOR 50V 3.3U	1	
C3218,19	ECUM1H103KBN	C.CAPACITOR CH 50V 0.01U	2	
C3220	ECEV1EV4R7Q	E.CAPACITOR 25V 4.7U	1	
C3221	ECEV1HV2R2Q	E.CAPACITOR 50V 2.2U	1	

Ref.No.		Part No.	Part Name & Description	Pcs	Remarks
C3222		ECUM1H103KBN	C.CAPACITOR CH 50V 0.01U	1	
C3223		ECUM1H223KBN	C.CAPACITOR 50V 0.022U	1	
C3224		ECUM1H471JCN	C.CAPACITOR CH 50V 470P	1	
C3225		ECEV1HV010Q	E.CAPACITOR 50V 1U	1	
C3226		ECUM1E104ZFN	C.CAPACITOR CH 25V 0.1U	1	
C3227		ECUM1H103ZFN	C.CAPACITOR 50V 0.01U	1	
C3228,29		ECQV1H154JZ	P.CAPACITOR 50V 0.15U	2	
C3230		ECUM1H103ZFN	C.CAPACITOR 50V 0.01U	1	
C3231		ECUM1H393KBN	C.CAPACITOR 50V 0.033U	1	
C3233		ECUM1H270JCN	C.CAPACITOR CH 50V 27P	1	
C3234		ECUM1H090DCN	C.CAPACITOR CH 50V 90P	1	
C3235		ECUM1E104ZFN	C.CAPACITOR CH 25V 0.1U	1	
C3236		ECUM1H151JCN	C.CAPACITOR CH 50V 150P	1	
C3237		ECUM1E104ZFN	C.CAPACITOR CH 25V 0.1U	1	
C3239,40		ECUM1E104ZFN	C.CAPACITOR CH 25V 0.1U	2	
C3241-44		ECUM1H103ZFN	C.CAPACITOR 50V 0.01U	4	
C3245		ECEV0JV470Q	E.CAPACITOR 6.3V 47U	1	
C3246		ECUM1H103ZFN	C.CAPACITOR 50V 0.01U	1	
C3248		ECUM1H103ZFN	C.CAPACITOR 50V 0.01U	1	
C3249		ECEV0JV470Q	E.CAPACITOR 6.3V 47U	1	
C3250-52		ECUM1C105ZFN	C.CAPACITOR 16V 1U	3	
C3253		ECEV0JV470Q	E.CAPACITOR 6.3V 47U	1	
C3254		ECUM1E104KBN	C.CAPACITOR CH 25V 0.1U	1	
C3255		ECUM1H103ZFN	C.CAPACITOR 50V 0.01U	1	
C3256		ECUM1C224KBM	C.CAPACITOR CH 16V 0.22U	1	
C3257,58		ECUM1H103ZFN	C.CAPACITOR 50V 0.01U	2	
C3259		ECEV0JV470Q	E.CAPACITOR 6.3V 47U	1	
C3261		ECUM1H103ZFN	C.CAPACITOR 50V 0.01U	1	
C3263-65		ECUM1H103ZFN	C.CAPACITOR 50V 0.01U	3	
C3266		ECEV0JV470Q	E.CAPACITOR 6.3V 47U	1	
C3267		ECUM1H103ZFN	C.CAPACITOR 50V 0.01U	1	
C3268		ECUM1E104ZFN	C.CAPACITOR CH 25V 0.1U	1	
C3269-71		ECUM1H103ZFN	C.CAPACITOR 50V 0.01U	3	
C3273		ECUM1H103ZFN	C.CAPACITOR 50V 0.01U	1	
C3274		ECUM1H102JCN	C.CAPACITOR CH 50V 1000P	1	
C3275		ECEV1HV2R2Q	E.CAPACITOR 50V 2.2U	1	
C3276		ECUM1H103ZFN	C.CAPACITOR 50V 0.01U	1	
C3277		ECUM1H271JCN	C.CAPACITOR CH 50V 270P	1	
C3278		ECUM1C105ZFN	C.CAPACITOR 16V 1U	1	
C3279		ECUM1H151JCN	C.CAPACITOR CH 50V 150P	1	
C3281		ECEV0JV470Q	E.CAPACITOR 6.3V 47U	1	
C3282		ECUM1H103ZFN	C.CAPACITOR 50V 0.01U	1	
C3401		ECEV0JV470Q	E.CAPACITOR 6.3V 47U	1	
C3402-06		ECUM1H103ZFN	C.CAPACITOR 50V 0.01U	5	
C3407		ECUM1H090DCN	C.CAPACITOR CH 50V 90P	1	
C3408		ECUM1H471JCN	C.CAPACITOR CH 50V 470P	1	
C3409		ECUM1H103ZFN	C.CAPACITOR 50V 0.01U	1	
C3410		ECUM1H101JCN	C.CAPACITOR CH 50V 100P	1	
C3411		ECEV1HV2R2Q	E.CAPACITOR 50V 2.2U	1	
C3412		ECUM1E224ZFN	C.CAPACITOR CH 25V 0.22U	1	
C3413-17		ECUM1H103ZFN	C.CAPACITOR 50V 0.01U	5	
C3418		ECUM1H223KBN	C.CAPACITOR 50V 0.022U	1	
C3419		ECUM1H180JCN	C.CAPACITOR CH 50V 18P	1	
C3420		ECUM1H330JCN	C.CAPACITOR CH 50V 33P	1	
C3421		ECUM1H103ZFN	C.CAPACITOR 50V 0.01U	1	
C3422		ECUM1H221JCN	C.CAPACITOR CH 50V 220P	1	
C3423		ECUM1H330JCN	C.CAPACITOR CH 50V 33P	1	
C3424		ECUM1H103ZFN	C.CAPACITOR 50V 0.01U	1	
C3425		ECEV1CV100Q	E.CAPACITOR 16V 10U	1	
C3426,27		ECUM1H103ZFN	C.CAPACITOR 50V 0.01U	2	
C3428		ECEV1EV4R7Q	E.CAPACITOR 25V 4.7U	1	
C3429		ECUM1H103ZFN	C.CAPACITOR 50V 0.01U	1	
C3430		ECEV0JV470Q	E.CAPACITOR 6.3V 47U	1	
C3431,32		ECUM1H103ZFN	C.CAPACITOR 50V 0.01U	2	
C3433		ECUM1E224ZFN	C.CAPACITOR CH 25V 0.22U	1	
C3434		ECEV1EV4R7Q	E.CAPACITOR 25V 4.7U	1	
C3435,36		ECUM1H103ZFN	C.CAPACITOR 50V 0.01U	2	
C3437-39		ECEV1CV100Q	E.CAPACITOR 16V 10U	3	
C3440		ECUM1H103ZFN	C.CAPACITOR 50V 0.01U	1	
C3441		ECUM1H101JCN	C.CAPACITOR CH 50V 100P	1	
C3442		ECUM1H270JCN	C.CAPACITOR CH 50V 27P	1	
C3443		ECUM1H560JCN	C.CAPACITOR CH 50V 56P	1	
C3444		ECEV1EV4R7Q	E.CAPACITOR 25V 4.7U	1	
C3445-47		ECUM1H103ZFN	C.CAPACITOR 50V 0.01U	3	
C3448		ECEV0JV470Q	E.CAPACITOR 6.3V 47U	1	

Ref.No.		Part No.	Part Name & Description	Pcs	Remarks
C3449,50		ECUM1H102JCN	C.CAPACITOR CH 50V 1000P	2	
C3451		ECUM1C105ZFN	C.CAPACITOR 16V 1U	1	
C3452		ECEV0JV470Q	E.CAPACITOR 6.3V 47U	1	
C3453-55		ECUM1H103ZFN	C.CAPACITOR 50V 0.01U	3	
C3456		ECUM1H680JCN	C.CAPACITOR CH 50V 68P	1	
C3457		ECUM1H103ZFN	C.CAPACITOR 50V 0.01U	1	
C3459		ECUM1H103ZFN	C.CAPACITOR 50V 0.01U	1	
C3460		ECUM1H151JCN	C.CAPACITOR CH 50V 150P	1	
C3461		ECUM1H103ZFN	C.CAPACITOR 50V 0.01U	1	
C3462		ECUM1H151JCN	C.CAPACITOR CH 50V 150P	1	
C3463		ECUM1H103ZFN	C.CAPACITOR 50V 0.01U	1	
C3464		ECUM1H820JCN	C.CAPACITOR CH 50V 82P	1	
C3465		ECUM1H103ZFN	C.CAPACITOR 50V 0.01U	1	
C3466,67		ECUM1E473KBN	C.CAPACITOR CH 25V 0.047U	2	
C3468		ECQV1H105JZ	P.CAPACITOR 50V 1U	1	
C3469		ECUM1H151JCN	C.CAPACITOR CH 50V 150P	1	
C3470		ECUM1H103ZFN	C.CAPACITOR 50V 0.01U	1	
C3471		ECUM1H100DCN	C.CAPACITOR CH 50V 10P	1	
C3472		ECUM1E104ZFN	C.CAPACITOR CH 25V 0.1U	1	
C3473		ECUM1H103ZFN	C.CAPACITOR 50V 0.01U	1	
C3474		ECEV0JV470Q	E.CAPACITOR 6.3V 47U	1	
C3475,76		ECUM1E104ZFN	C.CAPACITOR CH 25V 0.1U	2	
C3477		ECUM1H100DCN	C.CAPACITOR CH 50V 10P	1	
C3478		ECUM1H103ZFN	C.CAPACITOR 50V 0.01U	1	
C3479		ECEV0JV470Q	E.CAPACITOR 6.3V 47U	1	
C3480-83		ECUM1H103ZFN	C.CAPACITOR 50V 0.01U	4	
C3484,85		ECUM1E473KBN	C.CAPACITOR CH 25V 0.047U	2	
C3486		ECQV1H105JZ	P.CAPACITOR 50V 1U	1	
C3487		ECEV1CV100Q	E.CAPACITOR 16V 10U	1	
C3488		ECUM1H103ZFN	C.CAPACITOR 50V 0.01U	1	
C3490-92		ECUM1H103ZFN	C.CAPACITOR 50V 0.01U	3	
C3493		ECUM1E104ZFN	C.CAPACITOR CH 25V 0.1U	1	
C3497-99		ECUM1H103ZFN	C.CAPACITOR 50V 0.01U	3	
C3500		ECUM1H151JCN	C.CAPACITOR CH 50V 150P	1	
C3501		ECEV0JV470Q	E.CAPACITOR 6.3V 47U	1	
C3502		ECUM1H103ZFN	C.CAPACITOR 50V 0.01U	1	
C3503		ECEV0JV470Q	E.CAPACITOR 6.3V 47U	1	
C3504,05		ECUM1H103ZFN	C.CAPACITOR 50V 0.01U	2	
C3507-09		ECUM1H103ZFN	C.CAPACITOR 50V 0.01U	3	
C3510		ECUM1H101JCN	C.CAPACITOR CH 50V 100P	1	
C3511,12		ECUM1H103ZFN	C.CAPACITOR 50V 0.01U	2	
C3513		ECEV0JV470Q	E.CAPACITOR 6.3V 47U	1	
C3514		ECUM1H103ZFN	C.CAPACITOR 50V 0.01U	1	
C3515		ECEV1CV470Q	E.CAPACITOR CH 16V 47U	1	
C3516		ECUM1C105ZFN	C.CAPACITOR 16V 1U	1	
C3517		ECUM1H103ZFN	C.CAPACITOR 50V 0.01U	1	
C3520-22		ECUM1H102JCN	C.CAPACITOR CH 50V 1000P	3	
C3523		ECUM1E104KBN	C.CAPACITOR CH 25V 0.1U	1	
C3524		ECUM1H152KBN	C.CAPACITOR CH 50V 1500P	1	
C3525		ECUM1H103ZFN	C.CAPACITOR 50V 0.01U	1	
C3527		ECUM1E104ZFN	C.CAPACITOR CH 25V 0.1U	1	
C3528		ECUM1H470JCN	C.CAPACITOR CH 50V 47P	1	
C3529,30		ECUM1H181JCN	C.CAPACITOR CH 50V 180P	2	
C3531		ECUM1H103ZFN	C.CAPACITOR 50V 0.01U	1	
C3601		ECUM1H103ZFN	C.CAPACITOR 50V 0.01U	1	
C3602		ECUM1E104ZFN	C.CAPACITOR CH 25V 0.1U	1	
C3603		ECUM1H103ZFN	C.CAPACITOR 50V 0.01U	1	
C3604		ECUM1E104ZFN	C.CAPACITOR CH 25V 0.1U	1	
D3001		MA3091-M	DIODE	1	<R>
D3002,03		MA151K	DIODE	2	<R>
D3005-07		MA151K	DIODE	3	<R>
D3202		MA151WA	DIODE	1	<R>
D3203-05		MA151K	DIODE	3	<R>
D3206		MA151WA	DIODE	1	<R>
D3208		MA151K	DIODE	1	<R>
D3402		MA3091-M	DIODE	1	<R>
D3403		MA28W-B	DIODE	1	<R>
D3501		MA151K	DIODE	1	<R>
D3502		MA151WA	DIODE	1	<R>
D3503		MA151K	DIODE	1	<R>

MC-Service

Ref.No.	Part No.	Part Name & Description	Pcs	Remarks
DL3201	VLD0272	DELAY	1	
FL3003	VLF1129	FILTER	1	
FL3005	VLF1127	FILTER	1	
FL3006	VLF1128	FILTER	1	
FL3201	VLF1134	FILTER	1	
FL3202	VLF1133	FILTER	1	
FL3203	VLD0147	DELAY LINE	1	
FL3204	VLF1130	FILTER	1	
FL3205	VLF1131	FILTER	1	
FL3401	VLF1131	FILTER	1	
FL3402	VLD0089	DELAY LINE	1	
FL3403,04	VLF1129	FILTER	2	
FL3405,06	VLF1133	FILTER	2	
FL3501	VLF1132	FILTER	1	
IC3001	TC7S04F	IC	1	<R>
IC3002	AN3293S	IC	1	<R>
IC3003	MSM6871RS	IC	1	<R>
IC3004	AN3255FAP	IC	1	<R>
IC3006-08	NJM2233BMA	IC	3	<R>
IC3009	TC4W53F	IC	1	<R>
IC3011	AN78N05	IC	1	<R>
IC3012	NJM78L05UA	IC	1	<R>
IC3201	M52056FP	IC	1	<R>
IC3205-07	TC7S04F	IC	3	<R>
IC3208,09	TC7S66F	IC	2	<R>
IC3210	TC7S04F	IC	1	<R>
IC3211	MC74HC4053F	IC	1	<R>
IC3212	TK16031M	IC	1	<R>
IC3213	MC14577CP	IC	1	<R>
IC3214,15	NJM78L05UA	IC	2	<R>
IC3401	NJM2233BMA	IC	1	<R>
IC3402	AN3495S	IC	1	<R>
IC3403,04	MSM6871RS	IC	2	<R>
IC3406	M52093SP	IC	1	<R>
IC3407	SN74LS221NS	IC	1	<R>
IC3408	MC14577CP	IC	1	<R>
IC3409	NJM2234MA	IC	1	<R>
IC3410	AN78N05	IC	1	<R>
IC3411	VCR0373	IC	1	<R>
IC3412	NJM2233BMA	IC	1	<R>
IC3501	AN614	IC	1	<R>
IC3502	MC74HC4053F	IC	1	<R>
IC3503	TA75W558FU	IC	1	<R>
IC3504	TA75S393F	IC	1	<R>
IC3506	MC14538BF	IC	1	<R>
IC3507	MC14013BF	IC	1	<R>
IC3508	MC14040BF	IC	1	<R>
IC3509	MC14538BF	IC	1	<R>
IC3510	TC4S30F	IC	1	<R>
IC3511	MC14013BF	IC	1	<R>
IC3512	TC4S30F	IC	1	<R>
L3001	VLQ0163J390	COIL 39UH	1	
L3002	VLQ0319K101	COIL 100UH	1	
L3004	VLQ0319K101	COIL 100UH	1	
L3005	VLP0083	COIL	1	
L3007,08	VLQ0319K101	COIL 100UH	2	
L3011	VLQ0163J151	COIL 150UH	1	
L3201	VLQ0163J470	COIL 47UH	1	
L3202,03	VLQ0163J820	COIL 82UH	2	
L3204	VLQ0163J330	COIL 33UH	1	
L3206	VLQ0319K101	COIL 100UH	1	
L3207	VLQ0163J330	COIL 33UH	1	
L3208	VLQ0163J150	COIL 15UH	1	
L3209-11	VLQ0319K101	COIL 100UH	3	
L3401	VLQ0319K101	COIL 100UH	1	

Ref.No.	Part No.	Part Name & Description	Pcs	Remarks
L3402	VLP0083	COIL	1	
L3403	VLQ0163J680	COIL 68UH	1	
L3404	VLQ0163J151	COIL 150UH	1	
L3405-07	VLQ0319K101	COIL 100UH	3	
L3409,10	VLQ0163J150	COIL 15UH	2	
L3411-13	VLQ0319K101	COIL 100UH	3	
L3416	VLQ0163J6R8	COIL 6.8UH	1	
L3501-03	VLQ0319K101	COIL 100UH	3	
L3504	VLQ0163J390	COIL 39UH	1	
P3632	VJP3176B064	CONNECTOR (MALE) 64P	1	
Q3002	MSD601-R	TRANSISTOR	1	<R>
Q3003-05	MSC2295-B	TRANSISTOR	3	<R>
Q3006	MSD601-R	TRANSISTOR	1	<R>
Q3007	MSB709-R	TRANSISTOR	1	<R>
Q3008,09	XN4501	TRANSISTOR-RESISTOR	2	<R>
Q3010,11	2SA1022-C	TRANSISTOR	2	<R>
Q3012	MSD601-R	TRANSISTOR	1	<R>
Q3013	MSB709-R	TRANSISTOR	1	<R>
Q3014	MSD601-R	TRANSISTOR	1	<R>
Q3015	MSB709-R	TRANSISTOR	1	<R>
Q3016	MSD601-R	TRANSISTOR	1	<R>
Q3201,02	MSB709-R	TRANSISTOR	2	<R>
Q3203-07	MSD601-R	TRANSISTOR	5	<R>
Q3208,09	MSC2295-B	TRANSISTOR	2	<R>
Q3210	MSB709-R	TRANSISTOR	1	<R>
Q3211	XN1504	TRANSISTOR	1	<R>
Q3212	MSB709-R	TRANSISTOR	1	<R>
Q3401-03	MSD601-R	TRANSISTOR	3	<R>
Q3404-08	MSC2295-B	TRANSISTOR	5	<R>
Q3410	MSB709-R	TRANSISTOR	1	<R>
Q3411	MSC2295-B	TRANSISTOR	1	<R>
Q3501	MSD601-R	TRANSISTOR	1	<R>
Q3502,03	MSB709-R	TRANSISTOR	2	<R>
Q3504	MSC2295-B	TRANSISTOR	1	<R>
Q3601	MSB709-R	TRANSISTOR	1	<R>
Q3602	MSC2295-B	TRANSISTOR	1	<R>
QR3001	MRN1404	TRANSISTOR	1	<R>
QR3003	MRN2403	TRANSISTOR	1	<R>
QR3006	MRN1403	TRANSISTOR	1	<R>
QR3201,02	MRN1403	TRANSISTOR	2	<R>
QR3203	MRN1404	TRANSISTOR	1	<R>
QR3206,07	MRN1404	TRANSISTOR	2	<R>
QR3402,03	MRN1404	TRANSISTOR	2	<R>
QR3500	MRN1403	TRANSISTOR	1	<R>
R3001	ERJ6GEYJ562	M.RESISTOR CH 1/10W 5.6K	1	
R3002-09	ERJ6GEYJ102	M.RESISTOR CH 1/10W 1K	8	
R3010-12	VRE0034E102	M.RESISTOR CH 1/10W 1K	3	
R3013	ERJ6GEYJ152	M.RESISTOR CH 1/10W 1.5K	1	
R3014	VRE0034E112	M.RESISTOR CH 1/10W 1.1K	1	
R3015	ERJ6GEYJ122	M.RESISTOR CH 1/10W 1.2K	1	
R3017	ERJ6GEYJ101	M.RESISTOR CH 1/10W 100	1	
R3018	ERJ6GEYJ222	M.RESISTOR CH 1/10W 2.2K	1	
R3019	ERJ6GEYJ152	M.RESISTOR CH 1/10W 1.5K	1	
R3020,21	VRE0034E152	M.RESISTOR CH 1/10W 1.5K	2	
R3022	ERJ6GEYG153	M.RESISTOR CH 1/10W 15K	1	
R3024	ERJ6GEYJ184	M.RESISTOR CH 1/10W 180K	1	
R3026	ERJ6GEYJ225	M.RESISTOR CH 1/10W 2.2M	1	
R3027,28	ERJ6GEYJ222	M.RESISTOR CH 1/10W 2.2K	2	
R3029	ERJ6GEYJ102	M.RESISTOR CH 1/10W 1K	1	
R3030	ERJ6GEYJ223	M.RESISTOR CH 1/10W 22K	1	
R3032	VRE0034E241	M.RESISTOR CH 1/10W 240	1	
R3033	ERJ6GEYJ562	M.RESISTOR CH 1/10W 5.6K	1	
R3034	ERJ6GEYJ332	M.RESISTOR CH 1/10W 3.3K	1	

Ref.No.		Part No.	Part Name & Description	Pcs	Remarks
R3035,36		VRE0034E332	M.RESISTOR CH 1/10W 3.3K	2	
R3037		VRE0034E471	M.RESISTOR CH 1/10W 470	1	
R3039		VRE0034E471	M.RESISTOR CH 1/10W 470	1	
R3040,41		ERJ6GEYJ821	M.RESISTOR CH 1/10W 820	2	
R3042		ERJ6GEYJ822	M.RESISTOR CH 1/10W 8.2K	1	
R3043		ERJ6GEYJ471	M.RESISTOR CH 1/10W 470	1	
R3044		ERJ6GEYJ222	M.RESISTOR CH 1/10W 2.2K	1	
R3045		ERJ6GEYJ122	M.RESISTOR CH 1/10W 1.2K	1	
R3047		ERJ6GEYJ122	M.RESISTOR CH 1/10W 1.2K	1	
R3048		ERJ6GEYJ222	M.RESISTOR CH 1/10W 2.2K	1	
R3050		ERJ6GEYJ103	M.RESISTOR CH 1/10W 10K	1	
R3051		ERJ6GEYJ152	M.RESISTOR CH 1/10W 1.5K	1	
R3052		ERJ6GEYJ103	M.RESISTOR CH 1/10W 10K	1	
R3053		ERJ6GEYJ330	M.RESISTOR CH 1/10W 33	1	
R3054		ERJ6GEYJ471	M.RESISTOR CH 1/10W 470	1	
R3055		ERJ6GEYJ561	M.RESISTOR CH 1/10W 560	1	
R3056		ERJ6GEYJ222	M.RESISTOR CH 1/10W 2.2K	1	
R3057		ERJ6GEY0R00	M.RESISTOR CH 1/10W 0	1	
R3058		ERJ6GEYG153	M.RESISTOR CH 1/10W 15K	1	
R3061		ERJ6GEYJ105	M.RESISTOR CH 1/10W 1M	1	
R3062		ERJ6GEY0R00	M.RESISTOR CH 1/10W 0	1	
R3063,64		ERJ6GEYJ473	M.RESISTOR CH 1/10W 47K	2	
R3066		ERJ6GEY0R00	M.RESISTOR CH 1/10W 0	1	
R3069		ERJ6GEYJ103	M.RESISTOR CH 1/10W 10K	1	
R3070		ERJ6GEYG153	M.RESISTOR CH 1/10W 15K	1	
R3071,72		ERJ6GEYJ682	M.RESISTOR CH 1/10W 6.8K	2	
R3075		ERJ6GEYJ681	M.RESISTOR CH 1/10W 680	1	
R3077		ERJ6GEYJ102	M.RESISTOR CH 1/10W 1K	1	
R3078		VRE0034E392	M.RESISTOR CH 1/10W 3.9K	1	
R3079		VRE0034E333	M.RESISTOR CH 1/10W 33K	1	
R3080		ERJ6GEYJ104	M.RESISTOR CH 1/10W 100K	1	
R3081		ERJ6GEYJ561	M.RESISTOR CH 1/10W 560	1	
R3082		ERJ6GEYJ471	M.RESISTOR CH 1/10W 470	1	
R3083		ERJ6GEYJ102	M.RESISTOR CH 1/10W 1K	1	
R3084		ERJ6GEYJ391	M.RESISTOR CH 1/10W 390	1	
R3085		VRE0034E333	M.RESISTOR CH 1/10W 33K	1	
R3086		VRE0034E153	M.RESISTOR CH 1/10W 15K	1	
R3087		VRE0034E223	M.RESISTOR CH 1/10W 22K	1	
R3088,89		ERJ6GEYJ681	M.RESISTOR CH 1/10W 680	2	
R3090		ERJ6GEYJ102	M.RESISTOR CH 1/10W 1K	1	
R3091		ERJ6GEYJ471	M.RESISTOR CH 1/10W 470	1	
R3092		ERJ6GEYJ331	M.RESISTOR CH 1/10W 330	1	
R3093-95		ERJ6GEYJ681	M.RESISTOR CH 1/10W 680	3	
R3096		ERJ6GEYJ621	M.RESISTOR CH 1/10W 620	1	
R3097		ERJ6GEYJ101	M.RESISTOR CH 1/10W 100	1	
R3098		ERJ6GEYJ681	M.RESISTOR CH 1/10W 680	1	
R3099		ERJ6GEY0R00	M.RESISTOR CH 1/10W 0	1	
R3102		VRE0034E333	M.RESISTOR CH 1/10W 33K	1	
R3103		VRE0034E112	M.RESISTOR CH 1/10W 1.1K	1	
R3104		ERJ6GEYJ103	M.RESISTOR CH 1/10W 10K	1	
R3105		VRE0034E183	M.RESISTOR CH 1/10W 18K	1	
R3107		ERJ6GEYG472	M.RESISTOR CH 1/10W 4.7K	1	
R3112		ERJ6GEYJ103	M.RESISTOR CH 1/10W 10K	1	
R3113		ERJ6GEYJ471	M.RESISTOR CH 1/10W 470	1	
R3114		ERJ6GEYJ221	M.RESISTOR CH 1/10W 220	1	
R3115		ERJ6GEYJ102	M.RESISTOR CH 1/10W 1K	1	
R3201,02		ERJ6GEYJ562	M.RESISTOR CH 1/10W 5.6K	2	
R3203		ERJ6GEYJ101	M.RESISTOR CH 1/10W 100	1	
R3205		ERJ6GEYJ223	M.RESISTOR CH 1/10W 22K	1	
R3206		ERJ6GEYJ103	M.RESISTOR CH 1/10W 10K	1	
R3208		ERJ6GEY0R00	M.RESISTOR CH 1/10W 0	1	
R3209,10		ERJ6GEYJ223	M.RESISTOR CH 1/10W 22K	2	
R3211		ERJ6GEYG153	M.RESISTOR CH 1/10W 15K	1	
R3212		ERJ6GEYJ101	M.RESISTOR CH 1/10W 100	1	
R3214,15		ERJ6GEYJ102	M.RESISTOR CH 1/10W 1K	2	
R3216		ERJ6GEYJ103	M.RESISTOR CH 1/10W 10K	1	
R3218		ERJ6GEYJ563	M.RESISTOR CH 1/10W 56K	1	
R3219		ERJ6GEYJ182	M.RESISTOR CH 1/10W 1.8K	1	
R3220		ERJ6GEYJ103	M.RESISTOR CH 1/10W 10K	1	
R3221		ERJ6GEYJ822	M.RESISTOR CH 1/10W 8.2K	1	
R3222		ERJ6GEYG153	M.RESISTOR CH 1/10W 15K	1	
R3223		ERJ6GEYJ182	M.RESISTOR CH 1/10W 1.8K	1	
R3224		ERJ6GEYJ103	M.RESISTOR CH 1/10W 10K	1	
R3225		ERJ6GEYJ512	M.RESISTOR CH 1/10W 5.1K	1	
R3226		ERJ6GEYJ393	M.RESISTOR CH 1/10W 39K	1	

Ref.No.		Part No.	Part Name & Description	Pcs	Remarks
R3227,28		ERJ6GEYJ223	M.RESISTOR CH 1/10W 22K	2	
R3229		ERJ6GEYJ122	M.RESISTOR CH 1/10W 1.2K	1	
R3230		ERJ6GEYJ102	M.RESISTOR CH 1/10W 1K	1	
R3231,32		ERJ6GEYJ103	M.RESISTOR CH 1/10W 10K	2	
R3233		ERJ6GEYG333	M.RESISTOR CH 1/10W 33K	1	
R3234,35		ERJ6GEYJ223	M.RESISTOR CH 1/10W 22K	2	
R3236-39		ERJ6GEYJ102	M.RESISTOR CH 1/10W 1K	4	
R3240		ERJ6GEYJ223	M.RESISTOR CH 1/10W 22K	1	
R3241,42		ERJ6GEYJ102	M.RESISTOR CH 1/10W 1K	2	
R3243		ERJ6GEYJ332	M.RESISTOR CH 1/10W 3.3K	1	
R3244		ERJ6GEYJ473	M.RESISTOR CH 1/10W 47K	1	
R3245,46		ERJ6GEYJ561	M.RESISTOR CH 1/10W 560	2	
R3247		ERJ6GEYG472	M.RESISTOR CH 1/10W 4.7K	1	
R3249		ERJ6GEYJ562	M.RESISTOR CH 1/10W 5.6K	1	
R3250		ERJ6GEYJ103	M.RESISTOR CH 1/10W 10K	1	
R3251		ERJ6GEYJ220	M.RESISTOR CH 1/10W 22	1	
R3252		ERJ6GEYG472	M.RESISTOR CH 1/10W 4.7K	1	
R3253		ERJ6GEYJ271	M.RESISTOR CH 1/10W 270	1	
R3254		ERJ6GEYJ182	M.RESISTOR CH 1/10W 1.8K	1	
R3255,56		ERJ6GEYJ102	M.RESISTOR CH 1/10W 1K	2	
R3262,63		ERJ6GEYJ102	M.RESISTOR CH 1/10W 1K	2	
R3264		ERJ6GEYJ332	M.RESISTOR CH 1/10W 3.3K	1	
R3265		ERJ6GEYJ152	M.RESISTOR CH 1/10W 1.5K	1	
R3266		ERJ6GEYG153	M.RESISTOR CH 1/10W 15K	1	
R3267		ERJ6GEYJ223	M.RESISTOR CH 1/10W 22K	1	
R3268		ERJ6GEYJ183	M.RESISTOR CH 1/10W 18K	1	
R3269,70		ERJ6GEYJ102	M.RESISTOR CH 1/10W 1K	2	
R3271,72		ERJ6GEYJ392	M.RESISTOR CH 1/10W 3.9K	2	
R3273		ERJ6GEYJ102	M.RESISTOR CH 1/10W 1K	1	
R3274,75		ERJ6GEYG472	M.RESISTOR CH 1/10W 4.7K	2	
R3276		ERJ6GEYJ511	M.RESISTOR CH 1/10W 510	1	
R3277		ERJ6GEYJ102	M.RESISTOR CH 1/10W 1K	1	
R3278		ERJ6GEYG472	M.RESISTOR CH 1/10W 4.7K	1	
R3279,80		ERJ6GEYJ102	M.RESISTOR CH 1/10W 1K	2	
R3281		ERJ6GEYJ471	M.RESISTOR CH 1/10W 470	1	
R3282		ERJ6GEYJ681	M.RESISTOR CH 1/10W 680	1	
R3284		ERJ6GEYJ223	M.RESISTOR CH 1/10W 22K	1	
R3285		ERJ6GEYJ101	M.RESISTOR CH 1/10W 100	1	
R3286		ERJ6GEYJ104	M.RESISTOR CH 1/10W 100K	1	
R3287,88		ERJ6GEYJ103	M.RESISTOR CH 1/10W 10K	2	
R3289		ERJ6GEYJ473	M.RESISTOR CH 1/10W 47K	1	
R3290		ERJ6GEY0R00	M.RESISTOR CH 1/10W 0	1	
R3291		ERJ6GEYG333	M.RESISTOR CH 1/10W 33K	1	
R3292,93		ERJ6GEYJ223	M.RESISTOR CH 1/10W 22K	2	
R3295		ERJ6GEYJ102	M.RESISTOR CH 1/10W 1K	1	
R3297		ERJ6GEYJ392	M.RESISTOR CH 1/10W 3.9K	1	
R3298		ERJ6GEYJ562	M.RESISTOR CH 1/10W 5.6K	1	
R3299,00		ERJ6GEYJ103	M.RESISTOR CH 1/10W 10K	2	
R3301		ERJ6GEYG333	M.RESISTOR CH 1/10W 33K	1	
R3302		ERJ6GEYJ102	M.RESISTOR CH 1/10W 1K	1	
R3400		ERJ6GEYJ103	M.RESISTOR CH 1/10W 10K	1	
R3401		ERJ6GEYJ102	M.RESISTOR CH 1/10W 1K	1	
R3402		ERDS2T0	C.RESISTOR 1/4W 0	1	
R3403,04		ERJ6GEYJ102	M.RESISTOR CH 1/10W 1K	2	
R3405		ERJ6GEYJ122	M.RESISTOR CH 1/10W 1.2K	1	
R3407		ERJ6GEYG472	M.RESISTOR CH 1/10W 4.7K	1	
R3408		ERJ6GEYJ331	M.RESISTOR CH 1/10W 330	1	
R3409		ERJ6GEY0R00	M.RESISTOR CH 1/10W 0	1	
R3410		ERJ6GEYG333	M.RESISTOR CH 1/10W 33K	1	
R3411		ERJ6GEYJ562	M.RESISTOR CH 1/10W 5.6K	1	
R3412		ERJ6GEYG153	M.RESISTOR CH 1/10W 15K	1	
R3413		ERJ6GEYG333	M.RESISTOR CH 1/10W 33K	1	
R3414		ERJ6GEYJ223	M.RESISTOR CH 1/10W 22K	1	
R3415		ERJ6GEYJ271	M.RESISTOR CH 1/10W 270	1	
R3416		ERJ6GEYJ273	M.RESISTOR CH 1/10W 27K	1	
R3417		ERJ6GEYJ681	M.RESISTOR CH 1/10W 680	1	
R3418		ERJ6GEYJ122	M.RESISTOR CH 1/10W 1.2K	1	
R3419		ERJ6GEYJ152	M.RESISTOR CH 1/10W 1.5K	1	
R3420		ERJ6GEYJ102	M.RESISTOR CH 1/10W 1K	1	
R3421		ERJ6GEYJ103	M.RESISTOR CH 1/10W 10K	1	
R3422		ERJ6GEYJ223	M.RESISTOR CH 1/10W 22K	1	
R3423		ERJ6GEYJ681	M.RESISTOR CH 1/10W 680	1	
R3424		ERJ6GEYJ122	M.RESISTOR CH 1/10W 1.2K	1	
R3425		ERJ6GEYJ223	M.RESISTOR CH 1/10W 22K	1	
R3426-28		ERJ6GEYJ102	M.RESISTOR CH 1/10W 1K	3	

Ref.No.		Part No.	Part Name & Description	Pcs	Remarks
R3429		ERJ6GEYJ101	M.RESISTOR CH 1/10W 100	1	
R3430		ERJ6GEYJ222	M.RESISTOR CH 1/10W 2.2K	1	
R3431		ERJ6GEYJ103	M.RESISTOR CH 1/10W 10K	1	
R3432		ERJ6GEYJ183	M.RESISTOR CH 1/10W 18K	1	
R3433		ERJ6GEYJ272	M.RESISTOR CH 1/10W 2.7K	1	
R3434		ERJ6GEYJ561	M.RESISTOR CH 1/10W 560	1	
R3435-37		ERJ6GEYJ222	M.RESISTOR CH 1/10W 2.2K	3	
R3438		ERJ6GEYG472	M.RESISTOR CH 1/10W 4.7K	1	
R3439		ERJ6GEYJ392	M.RESISTOR CH 1/10W 3.9K	1	
R3440		ERJ6GEYG472	M.RESISTOR CH 1/10W 4.7K	1	
R3441		ERJ6GEY0R00	M.RESISTOR CH 1/10W 0	1	
R3445,46		ERJ6GEYJ102	M.RESISTOR CH 1/10W 1K	2	
R3449		ERJ6GEYG472	M.RESISTOR CH 1/10W 4.7K	1	
R3450,51		ERJ6GEYJ103	M.RESISTOR CH 1/10W 10K	2	
R3452		ERJ6GEYJ223	M.RESISTOR CH 1/10W 22K	1	
R3455		ERJ6GEYJ824	M.RESISTOR CH 1/10W 820K	1	
R3457,58		ERJ6GEYJ331	M.RESISTOR CH 1/10W 330	2	
R3460		ERJ6GEYJ124	M.RESISTOR CH 1/10W 120K	1	
R3461		ERJ6GEYJ824	M.RESISTOR CH 1/10W 820K	1	
R3462		ERJ6GEYJ102	M.RESISTOR CH 1/10W 1K	1	
R3463		ERJ6GEYJ471	M.RESISTOR CH 1/10W 470	1	
R3464		ERJ6GEY0R00	M.RESISTOR CH 1/10W 0	1	
R3465		ERJ6GEYJ471	M.RESISTOR CH 1/10W 470	1	
R3467		ERJ6GEYJ102	M.RESISTOR CH 1/10W 1K	1	
R3468		ERJ6GEYJ222	M.RESISTOR CH 1/10W 2.2K	1	
R3470		ERJ6GEYJ331	M.RESISTOR CH 1/10W 330	1	
R3471		ERJ6GEYJ103	M.RESISTOR CH 1/10W 10K	1	
R3472		ERJ6GEYJ681	M.RESISTOR CH 1/10W 680	1	
R3473		ERJ6GEYJ103	M.RESISTOR CH 1/10W 10K	1	
R3474		ERJ6GEYG333	M.RESISTOR CH 1/10W 33K	1	
R3475		ERJ6GEYJ102	M.RESISTOR CH 1/10W 1K	1	
R3476		ERJ6GEY0R00	M.RESISTOR CH 1/10W 0	1	
R3477-79		ERJ6GEYJ102	M.RESISTOR CH 1/10W 1K	3	
R3484		ERJ6GEYJ102	M.RESISTOR CH 1/10W 1K	1	
R3485		ERJ6GEYG153	M.RESISTOR CH 1/10W 15K	1	
R3486		ERJ6GEYJ223	M.RESISTOR CH 1/10W 22K	1	
R3487		ERJ6GEYJ471	M.RESISTOR CH 1/10W 470	1	
R3488		ERJ6GEYJ221	M.RESISTOR CH 1/10W 220	1	
R3489		ERJ6GEYJ821	M.RESISTOR CH 1/10W 820	1	
R3490		ERJ6GEYJ223	M.RESISTOR CH 1/10W 22K	1	
R3491		ERJ6GEYJ183	M.RESISTOR CH 1/10W 18K	1	
R3492,93		VRE0034E681	M.RESISTOR CH 1/10W 680	2	
R3494		VRE0034E122	M.RESISTOR CH 1/10W 1.2K	1	
R3495		VRE0034E201	M.RESISTOR CH 1/10W 200	1	
R3496		ERJ6GEYJ152	M.RESISTOR CH 1/10W 1.5K	1	
R3499		ERJ6GEYJ101	M.RESISTOR CH 1/10W 100	1	
R3501		ERJ6GEYG472	M.RESISTOR CH 1/10W 4.7K	1	
R3502		ERJ6GEY0R00	M.RESISTOR CH 1/10W 0	1	
R3503		ERJ6GEYG472	M.RESISTOR CH 1/10W 4.7K	1	
R3504		ERJ6GEYJ152	M.RESISTOR CH 1/10W 1.5K	1	
R3506		ERJ6GEYJ103	M.RESISTOR CH 1/10W 10K	1	
R3507		ERJ6GEYJ102	M.RESISTOR CH 1/10W 1K	1	
R3508		ERJ6GEYJ222	M.RESISTOR CH 1/10W 2.2K	1	
R3509		ERJ6GEYJ103	M.RESISTOR CH 1/10W 10K	1	
R3510		ERJ6GEYG472	M.RESISTOR CH 1/10W 4.7K	1	
R3511,12		ERJ6GEYJ102	M.RESISTOR CH 1/10W 1K	2	
R3513		ERJ6GEYJ223	M.RESISTOR CH 1/10W 22K	1	
R3514		ERJ6GEYJ103	M.RESISTOR CH 1/10W 10K	1	
R3515		ERJ6GEYJ912	M.RESISTOR CH 1/10W 9.1K	1	
R3516		ERJ6GEYJ104	M.RESISTOR CH 1/10W 100K	1	
R3517		ERJ6GEYJ103	M.RESISTOR CH 1/10W 10K	1	
R3518		ERJ6GEYJ273	M.RESISTOR CH 1/10W 27K	1	
R3519		ERJ6GEYJ105	M.RESISTOR CH 1/10W 1M	1	
R3520,21		ERJ6GEYJ103	M.RESISTOR CH 1/10W 10K	2	
R3529		ERJ6GEYJ103	M.RESISTOR CH 1/10W 10K	1	
R3530		ERJ6GEYG153	M.RESISTOR CH 1/10W 15K	1	
R3531		ERJ6GEYJ433	M.RESISTOR CH 1/10W 43K	1	
R3532		ERJ6GEYJ473	M.RESISTOR CH 1/10W 47K	1	
R3533		ERJ6GEYJ224	M.RESISTOR CH 1/10W 220K	1	
R3534		ERJ6GEYJ124	M.RESISTOR CH 1/10W 120K	1	
R3536		ERJ6GEYJ222	M.RESISTOR CH 1/10W 2.2K	1	
R3537		ERJ6GEYJ152	M.RESISTOR CH 1/10W 1.5K	1	
R3538		ERJ6GEYJ102	M.RESISTOR CH 1/10W 1K	1	
R3540		ERJ6GEYJ683	M.RESISTOR CH 1/10W 68K	1	
R3541		ERJ6GEYJ272	M.RESISTOR CH 1/10W 2.7K	1	

Ref.No.		Part No.	Part Name & Description	Pcs	Remarks
R3542		ERJ6GEYJ683	M.RESISTOR CH 1/10W 68K	1	
R3543		ERJ6GEYJ272	M.RESISTOR CH 1/10W 2.7K	1	
R3544		ERJ6GEYJ331	M.RESISTOR CH 1/10W 330	1	
R3545,46		ERJ6GEYJ222	M.RESISTOR CH 1/10W 2.2K	2	
R3547		ERJ6GEYJ223	M.RESISTOR CH 1/10W 22K	1	
R3548		ERJ6GEYJ104	M.RESISTOR CH 1/10W 100K	1	
R3549		ERJ6GEYJ563	M.RESISTOR CH 1/10W 56K	1	
R3550		ERJ6GEY0R00	M.RESISTOR CH 1/10W 0	1	
R3551		ERJ6GEYJ561	M.RESISTOR CH 1/10W 560	1	
R3601		ERJ6GEYJ332	M.RESISTOR CH 1/10W 3.3K	1	
R3602		ERJ6GEYJ222	M.RESISTOR CH 1/10W 2.2K	1	
R3603		ERJ6GEYJ102	M.RESISTOR CH 1/10W 1K	1	
R3604		ERJ6GEYJ681	M.RESISTOR CH 1/10W 680	1	
R3605		ERJ6GEYJ331	M.RESISTOR CH 1/10W 330	1	
R3606		ERJ6GEYJ103	M.RESISTOR CH 1/10W 10K	1	
R3607		ERJ6GEYG333	M.RESISTOR CH 1/10W 33K	1	
R3608		ERJ6GEYJ221	M.RESISTOR CH 1/10W 220	1	
R3609		ERJ6GEYJ222	M.RESISTOR CH 1/10W 2.2K	1	
R3611		ERJ6GEYJ122	M.RESISTOR CH 1/10W 1.2K	1	
R3612		ERJ6GEYJ182	M.RESISTOR CH 1/10W 1.8K	1	
R3614		ERJ6GEY0R00	M.RESISTOR CH 1/10W 0	1	
R3615		ERJ6GEYJ222	M.RESISTOR CH 1/10W 2.2K	1	
R3616		ERJ6GEYJ102	M.RESISTOR CH 1/10W 1K	1	
TH3401-03		ERTD2FHL102S	THERMISTOR 1K	3	
VC3201		ECV1ZW60X60	TRIMMER	1	
VR3003		EVM7JGA00B13	V.RESISTOR 1K	1	
VR3004,05		EVN32CA00B53	V.RESISTOR 5K	2	
VR3006		EVM7DGA00B52	V.RESISTOR 500	1	
VR3202		EVN32CA00B15	V.RESISTOR 100K	1	
VR3203		EVN32CA00B24	VARIABLE 20K	1	
VR3206		EVM7DGA00B14	V.RESISTOR 10K	1	
VR3207		EVM7DGA00B24	V.RESISTOR 20K	1	
VR3401-03		EVM7JGA00B13	V.RESISTOR 1K	3	
VR3404		EVN32CA00B13	V.RESISTOR 1K	1	
VR3406		EVM7DGA00B54	V.RESISTOR 50K	1	
VR3407		EVM7DGA00B23	V.RESISTOR 2K	1	
VR3408		EVM7DGA00B54	V.RESISTOR 50K	1	
VR3410		EVN32CA00B54	V.RESISTOR 50K	1	
X3201		VSX0406	CRYSTAL OSCILLATOR	1	<R>
X3401		VSX0316	CRYSTAL OSCILLATOR	1	<R>
			MISCELLANEOUS		
E48		VMZ2228	INSULATER	1	
E49		VSC3973	SHIELD PLATE	1	
E50		XTV3+6FFR	SCREW	2	

Ref.No.		Part No.	Part Name & Description	Pcs	Remarks
		VEP04328B	P.C.BOARD W/COMPONENT		AG-8600E
			METER		
D4201-06		LN440YCPUVT1	DIODE	6	<R>
P4201		VJP3529	CONNECTOR	1	
R4201,02		ERDS2TJ151	C.RESISTOR 1/4W 150	2	
R4209,10		ERDS2TJ151	C.RESISTOR 1/4W 150	2	
			MISCELLANEOUS		
E55		VGF0245	METER HOLDER	2	
E56		VSE0117	METER	1	
E57		VSE0115	AUDIO METER	1	

Ref.No.		Part No.	Part Name & Description	Pcs	Remarks
		VEP04419A	P.C.BOARD W/COMPONENT		AG-8700E
			MIC JACK		
C4301		ECEA1CKA100	E.CAPACITOR 16V 10U	1	
C4302		ECUM1H102KBN	C.CAPACITOR CH 50V 1000P	1	
C4303-05		ECEA1CKA470	E.CAPACITOR 16V 47U	3	
C4306		ECEA1CKA100	E.CAPACITOR 16V 10U	1	
C4307		ECUM1H102KBN	C.CAPACITOR CH 50V 1000P	1	
C4308		ECEA1CKA470	E.CAPACITOR 16V 47U	1	
C4310,11		ECKF1H103ZF	C.CAPACITOR 50V 0.01U	2	
FL4301,02		VLF0523	FILTER	2	
IC4301		NJM2068MD	IC	1	<R>
J4301,02		VJJ0078	MIC JACK	2	
P4301		VJP3076	CONNECTOR	1	
Q4301		MSD602-R	TRANSISTOR	1	<R>
R4301,02		ERJ6GEYJ224	M.RESISTOR CH 1/10W 220K	2	
R4303		ERJ6GEYJ561	M.RESISTOR CH 1/10W 560	1	
R4304		ERJ6GEYJ124	M.RESISTOR CH 1/10W 120K	1	
R4305		ERJ6GEYJ753	M.RESISTOR CH 1/10W 75K	1	
R4306		ERJ6GEYJ182	M.RESISTOR CH 1/10W 1.8K	1	
R4307,08		ERJ6GEYJ224	M.RESISTOR CH 1/10W 220K	2	
R4309		ERJ6GEYJ124	M.RESISTOR CH 1/10W 120K	1	
R4310		ERJ6GEYJ753	M.RESISTOR CH 1/10W 75K	1	
R4311,12		ERJ6GEYJ330	M.RESISTOR CH 1/10W 33	2	
R4314,15		ERJ6GEY0R00	M.RESISTOR CH 1/10W 0	2	
R4316		ERJ6GEYJ561	M.RESISTOR CH 1/10W 560	1	
			MISCELLANEOUS		
E62		VSC3429	SHIELD COVER	1	
E63		VMP3224	MIC JACK ANGLE	1	
		VQL4821	ROM LABEL	1	

MC-Service

Ref.No.	Part No.	Part Name & Description	Pcs	Remarks
	VEP04420C	P.C.BOARD W/COMPONENT		AG-8700E
		AUDIO (1)		
C40001	ECEA1CGE471	E.CAPACITOR 16V 470U	1	
C40002	ECUM1H153KBN	C.CAPACITOR CH 50V 0.015U	1	
C40003	ECEA1CGE101	E.CAPACITOR 16V 100U	1	
C40004	ECSF1EE106	T.CAPACITOR 25V 10U	1	
C40006	ECEA1HN010S	E.CAPACITOR 50V 1U	1	
C40007	ECEA1HGE010	E.CAPACITOR 50V 1U	1	
C40008,09	ECEA1HGE100	E.CAPACITOR 50V 10U	2	
C40010	ECEA1CN100S	E.CAPACITOR 16V 10U	1	
C40011	ECEA1HGE100	E.CAPACITOR 50V 10U	1	
C40012	ECQB1H104JF	P.CAPACITOR 50V 0.1U	1	
C40013	ECUM1H560JCN	C.CAPACITOR CH 50V 56P	1	
C40014	ECEA0JGE221	E.CAPACITOR 6.3V 220U	1	
C40015	ECEA1CGE221	E.CAPACITOR 16V 220U	1	
C40016	ECQV1H334JZ	P.CAPACITOR 50V 0.33U	1	
C40017	ECQB1H104JF	P.CAPACITOR 50V 0.1U	1	
C40018	ECEA1HGE100	E.CAPACITOR 50V 10U	1	
C40019	ECEA1CGE101	E.CAPACITOR 16V 100U	1	
C40020	ECQB1H473JF	P.CAPACITOR 50V 0.047U	1	
C40021	ECKW2H331KB	C.CAPACITOR 500V 330P	1	
C40022	ECKD2H151KB	C.CAPACITOR 500V 150P	1	
C40023	ECUM1H102KBN	C.CAPACITOR CH 50V 1000P	1	
C40024	ECQP1H223JZ	P.CAPACITOR 50V 0.022U	1	
C40025	ECUM1H102KBN	C.CAPACITOR CH 50V 1000P	1	
C40026	ECQB1H103JF	P.CAPACITOR 50V 0.01U	1	
C40027	ECQP1152JZ	P.CAPACITOR 100V 1500P	1	
C40028	ECEA1CGE101	E.CAPACITOR 16V 100U	1	
C40029	ECSF1EE336	T.CAPACITOR 25V 33U	1	
C40030	ECUM1H182KBN	C.CAPACITOR CH 50V 1800P	1	
C40031,32	ECSF1CE106	T.CAPACITOR 16V 22U	2	
C40033	ECSF1EE106	T.CAPACITOR 25V 10U	1	
C40034	ECSF1HE105	T.CAPACITOR 50V 1U	1	
C40035	ECUM1H102KBN	C.CAPACITOR CH 50V 1000P	1	
C40036	ECSF1CE336	T.CAPACITOR 16V 33U	1	
C40037	ECQB1H823JF	P.CAPACITOR 50V 0.082U	1	
C40038	ECUM1H101JCN	C.CAPACITOR CH 50V 100P	1	
C40039	ECEA1HGE4R7	E.CAPACITOR 50V 4.7U	1	
C40040	ECEA1HGE2R2	E.CAPACITOR 50V 2.2U	1	
C40041,42	ECUM1H223KBN	C.CAPACITOR 50V 0.022U	2	
C40043	ECEA1HGE100	E.CAPACITOR 50V 10U	1	
C40044	ECQB1H472JF	P.CAPACITOR 50V 4700P	1	
C40045	ECQB1H273JF	P.CAPACITOR 50V 0.027U	1	
C40046	ECEA1HGE100	E.CAPACITOR 50V 10U	1	
C40047	ECUM1H102KBN	C.CAPACITOR CH 50V 1000P	1	
C40048	ECQB1H562JF	P.CAPACITOR 50V 5600P	1	
C40049	ECEA1HGE010	E.CAPACITOR 50V 1U	1	
C40050	ECQB1H472JF	P.CAPACITOR 50V 4700P	1	
C40051	ECQP1152JZ	P.CAPACITOR 100V 1500P	1	
C40052	ECEA1HGE100	E.CAPACITOR 50V 10U	1	
C40053	ECUM1H102JCN	C.CAPACITOR CH 50V 1000P	1	
C40054	ECUM1H152KBN	C.CAPACITOR CH 50V 1500P	1	
C40055	ECUM1H102KBN	C.CAPACITOR CH 50V 1000P	1	
C40056	ECEA1HGE010	E.CAPACITOR 50V 1U	1	
C40057	ECEA1HN2R2S	E.CAPACITOR 50V 2.2U	1	
C40058	ECEA1HN010S	E.CAPACITOR 50V 1U	1	
C40059	ECUM1C104KBN	C.CAPACITOR CH 16V 0.1U	1	
C40060,61	ECUM1H102KBN	C.CAPACITOR CH 50V 1000P	2	
C40062	ECQB1H473JF	P.CAPACITOR 50V 0.047U	1	
C40063	ECEA1HGE100	E.CAPACITOR 50V 10U	1	
C40064	ECEA1EN4R7S	E.CAPACITOR 25V 4.7U	1	
C40065	ECQB1H222JF	P.CAPACITOR 50V 2200P	1	
C40066	ECUM1C104KBN	C.CAPACITOR CH 16V 0.1U	1	
C40067	ECUM1H222KBN	C.CAPACITOR CH 50V 2200P	1	
C40068	ECUM1H152KBN	C.CAPACITOR CH 50V 1500P	1	
C40069	ECQB1H153JF	P.CAPACITOR 50V 0.015U	1	
C40070	ECUM1H273KBN	C.CAPACITOR CH 50V 0.027U	1	
C40071	ECEA1HGE2R2	E.CAPACITOR 50V 2.2U	1	
C40072	ECQB1H222JF	P.CAPACITOR 50V 2200P	1	
C40073	ECEA1CGE471	E.CAPACITOR 16V 470U	1	
C40074	ECEA1CGE101	E.CAPACITOR 16V 100U	1	
C40075	ECUM1H153KBN	C.CAPACITOR CH 50V 0.015U	1	
C40076	ECEA1HGE2R2	E.CAPACITOR 50V 2.2U	1	
C40077	ECUM1H182KBN	C.CAPACITOR CH 50V 1800P	1	
C40078	ECSF1EE336	T.CAPACITOR 25V 33U	1	
C40079,80	ECSF1CE106	T.CAPACITOR 16V 22U	2	
C40081	ECSF1EE106	T.CAPACITOR 25V 10U	1	
C40082	ECSF1HE105	T.CAPACITOR 50V 1U	1	
C40083	ECUM1H102KBN	C.CAPACITOR CH 50V 1000P	1	
C40084	ECSF1CE336	T.CAPACITOR 16V 33U	1	
C40085	ECQB1H823JF	P.CAPACITOR 50V 0.082U	1	
C40086	ECEA1HGE4R7	E.CAPACITOR 50V 4.7U	1	
C40087	ECUM1H101JCN	C.CAPACITOR CH 50V 100P	1	
C40088	ECEA1HGE2R2	E.CAPACITOR 50V 2.2U	1	
C40089	ECQB1H104JF	P.CAPACITOR 50V 0.1U	1	
C40090	ECUM1H560JCN	C.CAPACITOR CH 50V 56P	1	
C40091	ECUM1H223KBN	C.CAPACITOR 50V 0.022U	1	
C40092,93	ECEA1HGE100	E.CAPACITOR 50V 10U	2	
C40094	ECUM1H223KBN	C.CAPACITOR 50V 0.022U	1	
C40095	ECEA1HGE100	E.CAPACITOR 50V 10U	1	
C40096	ECEA1CN100S	E.CAPACITOR 16V 10U	1	
C40097	ECEA1HGE100	E.CAPACITOR 50V 10U	1	
C40098	ECUM1H273KBN	C.CAPACITOR CH 50V 0.027U	1	
C40099	ECEA1HN010S	E.CAPACITOR 50V 1U	1	
C40101	ECSF1EE106	T.CAPACITOR 25V 10U	1	
C40102	ECEA1HGE010	E.CAPACITOR 50V 1U	1	
C40103	ECEA0JGE221	E.CAPACITOR 6.3V 220U	1	
C40104	ECQV1H334JZ	P.CAPACITOR 50V 0.33U	1	
C40105	ECQB1H104JF	P.CAPACITOR 50V 0.1U	1	
C40106	ECEA1HGE100	E.CAPACITOR 50V 10U	1	
C40107	ECQB1H473JF	P.CAPACITOR 50V 0.047U	1	
C40108	ECEA1CGE101	E.CAPACITOR 16V 100U	1	
C40109	ECEA1CGE221	E.CAPACITOR 16V 220U	1	
C40110	ECEA1HGE100	E.CAPACITOR 50V 10U	1	
C40111	ECQB1H273JF	P.CAPACITOR 50V 0.027U	1	
C40112	ECUM1H102KBN	C.CAPACITOR CH 50V 1000P	1	
C40113	ECQB1H472JF	P.CAPACITOR 50V 4700P	1	
C40114	ECQB1H562JF	P.CAPACITOR 50V 5600P	1	
C40115	ECEA1HGE010	E.CAPACITOR 50V 1U	1	
C40116	ECQB1H472JF	P.CAPACITOR 50V 4700P	1	
C40117	ECEA1HGE100	E.CAPACITOR 50V 10U	1	
C40118	ECUM1H102JCN	C.CAPACITOR CH 50V 1000P	1	
C40119	ECQB1H222JF	P.CAPACITOR 50V 2200P	1	
C40120	ECUM1C104KBN	C.CAPACITOR CH 16V 0.1U	1	
C40121	ECKW2H331KB	C.CAPACITOR 500V 330P	1	
C40122	ECKD2H151KB	C.CAPACITOR 500V 150P	1	
C40123	ECQP1152JZ	P.CAPACITOR 100V 1500P	1	
C40124	ECEA1HGE010	E.CAPACITOR 50V 1U	1	
C40125	ECUM1H102KBN	C.CAPACITOR CH 50V 1000P	1	
C40126	ECUM1H152KBN	C.CAPACITOR CH 50V 1500P	1	
C40127	ECEA1HN2R2S	E.CAPACITOR 50V 2.2U	1	
C40128	ECEA1HN010S	E.CAPACITOR 50V 1U	1	
C40129	ECUM1C104KBN	C.CAPACITOR CH 16V 0.1U	1	
C40130	ECUM1H222KBN	C.CAPACITOR CH 50V 2200P	1	
C40131	ECUM1H152KBN	C.CAPACITOR CH 50V 1500P	1	
C40132	ECQB1H153JF	P.CAPACITOR 50V 0.015U	1	
C40133,34	ECUM1H102KBN	C.CAPACITOR CH 50V 1000P	2	
C40135	ECQB1H473JF	P.CAPACITOR 50V 0.047U	1	
C40136	ECEA1EN4R7S	E.CAPACITOR 25V 4.7U	1	
C40137	ECEA1HGE100	E.CAPACITOR 50V 10U	1	
C40138	ECQB1H222JF	P.CAPACITOR 50V 2200P	1	
C40139	ECEA1CGE471	E.CAPACITOR 16V 470U	1	
C40140,41	ECEA1CGE101	E.CAPACITOR 16V 100U	2	
C40142	ECEA1HGE220	E.CAPACITOR 50V 22U	1	
C40143	ECEA1CGE101	E.CAPACITOR 16V 100U	1	
C40144	ECUM1H103KBN	C.CAPACITOR CH 50V 0.01U	1	
C40145	ECEA1VGE330	E.CAPACITOR 35V 33U	1	
C40146	ECQB1H104JF	P.CAPACITOR 50V 0.1U	1	
C40147	ECEA1VGE330	E.CAPACITOR 35V 33U	1	
C40148	ECUM1H330JCN	C.CAPACITOR CH 50V 33P	1	
C40149	ECEA1HGE010	E.CAPACITOR 50V 1U	1	
C40150	ECUM1H102KBN	C.CAPACITOR CH 50V 1000P	1	
C40151	ECEA1VGE330	E.CAPACITOR 35V 33U	1	
C40152	ECEA1CGE101	E.CAPACITOR 16V 100U	1	
C40153	ECUM1H102KBN	C.CAPACITOR CH 50V 1000P	1	
C40154	ECEA1CGE101	E.CAPACITOR 16V 100U	1	

Ref.No.		Part No.	Part Name & Description	Pcs	Remarks
C40155		ECEA1HGE100	E.CAPACITOR 50V 10U	1	
C40156-58		ECUM1H103KBN	C.CAPACITOR CH 50V 0.01U	3	
C40159,60		ECEA1HGE100	E.CAPACITOR 50V 10U	2	
C40161		ECEA1AGE101	E.CAPACITOR 10V 100U	1	
C40162,63		ECEA1HGE100	E.CAPACITOR 50V 10U	2	
C40164		ECEA1CN100S	E.CAPACITOR 16V 10U	1	
C40165,66		ECUM1H103KBN	C.CAPACITOR CH 50V 0.01U	2	
C40167		ECEA1HGE100	E.CAPACITOR 50V 10U	1	
C40168		ECEA1CN100S	E.CAPACITOR 16V 10U	1	
C40169		ECEA1VGE330	E.CAPACITOR 35V 33U	1	
C40170		ECEA1HGE010	E.CAPACITOR 50V 1U	1	
C40171		ECEA1CGE470	E.CAPACITOR 16V 47U	1	
C40172		ECEA1VGE330	E.CAPACITOR 35V 33U	1	
C40173		ECEA1CGE470	E.CAPACITOR 16V 47U	1	
C40175		ECEA1CGE101	E.CAPACITOR 16V 100U	1	
C40176		ECEA1CGE470	E.CAPACITOR 16V 47U	1	
C40180-83		ECEA1HGE100	E.CAPACITOR 50V 10U	4	
D40001-11		MA151K	DIODE	11	<R>
D40012,13		MA151WA	DIODE	2	<R>
D40014,15		MA151K	DIODE	2	<R>
D40016		MA151WK	DIODE	1	<R>
D40017		MA151K	DIODE	1	<R>
D40018		MA723	DIODE	1	<R>
D40019		MA165VT	DIODE	1	<R>
D40020,21		MA151K	DIODE	2	<R>
FL40001,02		VLF0402	FILTER	2	
IC40001		HA12005	IC	1	<R>
IC40002		NE646N	IC	1	<R>
IC40003		HA12005	IC	1	<R>
IC40004		NE646N	IC	1	<R>
IC40005		UPC4558G2	IC	1	<R>
IC40006,07		MN1280R	IC	2	<R>
IC40008		AN360	IC	1	<R>
IC40009		MC14053BF	IC	1	<R>
IC40010-12		MC74HC595AF	IC	3	<R>
IC40013-15		TD62503F	IC	3	<R>
IC40016		MC14066BF	IC	1	<R>
IC40017		MC14053BF	IC	1	<R>
IC40018,19		AN6558S	IC	2	<R>
IC40020		M51132L	IC	1	<R>
IC40021		TC7S32F	IC	1	<R>
J40001		ERJ6GEY0R00	M.RESISTOR CH 1/10W 0	1	
J40003-05		ERJ6GEY0R00	M.RESISTOR CH 1/10W 0	3	
L40001		VLQEL06F102K	COIL 1000UH	1	
L40002		VLQ0123	COIL	1	
L40003		VLQEL06F102K	COIL 1000UH	1	
L40004,05		VLQEL06F471K	COIL 470UH	2	
L40006		VLQEL06F102K	COIL 1000UH	1	
L40007		VLQ0123	COIL	1	
L40008,09		VLQEL06F102K	COIL 1000UH	2	
L40010		VLQ0460	COIL	1	
P40001		VJP1231T	CONNECTOR (MALE) 4P	1	
P40002		VJP1230R	CONNECTOR (MALE) 3P	1	
P40003		VJP1230T	CONNECTOR (MALE) 3P	1	
P40004		VJP3176B064	CONNECTOR (MALE) 64P	1	

Ref.No.		Part No.	Part Name & Description	Pcs	Remarks
Q40001		2SD1306	TRANSISTOR	1	<R>
Q40002,03		2SD1149-R	TRANSISTOR	2	<R>
Q40004		2SB709A	TRANSISTOR	1	<R>
Q40005,06		MSD601-R	TRANSISTOR	2	<R>
Q40007		MSB709-R	TRANSISTOR	1	<R>
Q40008		2SD636	TRANSISTOR	1	<R>
Q40009		2SD1862	TRANSISTOR	1	<R>
Q40010		2SB643	TRANSISTOR	1	<R>
Q40011		2SD1149-R	TRANSISTOR	1	<R>
Q40012		MSB709-R	TRANSISTOR	1	<R>
Q40013		2SD1149-R	TRANSISTOR	1	<R>
Q40014,15		2SD602A	TRANSISTOR	2	<R>
Q40016,17		2SB710A-R	TRANSISTOR	2	<R>
Q40018		2SD1862	TRANSISTOR	1	<R>
Q40019		MSB709-R	TRANSISTOR	1	<R>
Q40020,21		2SD602A	TRANSISTOR	2	<R>
Q40022,23		2SC2405-S	TRANSISTOR	2	<R>
Q40024,25		2SD1306	TRANSISTOR	2	<R>
Q40026		2SD1149-R	TRANSISTOR	1	<R>
Q40027		2SB709A	TRANSISTOR	1	<R>
Q40028		2SD1149-R	TRANSISTOR	1	<R>
Q40029,30		MSD601-R	TRANSISTOR	2	<R>
Q40031		MSB709-R	TRANSISTOR	1	<R>
Q40032		2SD636	TRANSISTOR	1	<R>
Q40033		2SD1149-R	TRANSISTOR	1	<R>
Q40034		MSB709-R	TRANSISTOR	1	<R>
Q40035		2SB643	TRANSISTOR	1	<R>
Q40036		2SD1862	TRANSISTOR	1	<R>
Q40037		MSB709-R	TRANSISTOR	1	<R>
Q40038,39		2SD602A	TRANSISTOR	2	<R>
Q40040		2SB710A-R	TRANSISTOR	1	<R>
Q40041,42		2SC2405-S	TRANSISTOR	2	<R>
Q40043		2SD1306	TRANSISTOR	1	<R>
Q40044		2SD1149-R	TRANSISTOR	1	<R>
Q40045		MSB709-R	TRANSISTOR	1	<R>
Q40046		2SB710A-R	TRANSISTOR	1	<R>
Q40047		2SD602-R	TRANSISTOR	1	<R>
Q40048		MSD601-R	TRANSISTOR	1	<R>
Q40049		2SD1862	TRANSISTOR	1	<R>
Q40050,51		2SB710A-R	TRANSISTOR	2	<R>
QR40001-03		MRN1403	TRANSISTOR	3	<R>
QR40004		UN2114	TRANSISTOR-RESISTOR	1	<R>
QR40005		MRN1403	TRANSISTOR	1	<R>
QR40006		MRN1404	TRANSISTOR	1	<R>
QR40007		MRN1403	TRANSISTOR	1	<R>
QR40008-10		MRN2403	TRANSISTOR	3	<R>
QR40011		MRN1403	TRANSISTOR	1	<R>
QR40012		MRN1402	TRANSISTOR	1	<R>
QR40013		UN2217	TRANSISTOR-RESISTOR	1	<R>
QR40014		UN2215	TRANSISTOR-RESISTOR	1	<R>
QR40015-17		MRN1403	TRANSISTOR	3	<R>
QR40018		UN2114	TRANSISTOR-RESISTOR	1	<R>
QR40019		MRN1403	TRANSISTOR	1	<R>
QR40020-22		MRN2403	TRANSISTOR	3	<R>
QR40023		MRN1403	TRANSISTOR	1	<R>
QR40024		MRN1402	TRANSISTOR	1	<R>
QR40025		MRN1403	TRANSISTOR	1	<R>
QR40026		UN2215	TRANSISTOR-RESISTOR	1	<R>
QR40027		UN2217	TRANSISTOR-RESISTOR	1	<R>
QR40028		MRN1404	TRANSISTOR	1	<R>
QR40029-32		MRN2404	TRANSISTOR	4	<R>
QR40050-53		MRN1402	TRANSISTOR	4	<R>
R40001-03		ERJ6GEYG472	M.RESISTOR CH 1/10W 4.7K	3	
R40004		ERJ6GEYJ272	M.RESISTOR CH 1/10W 2.7K	1	
R40005		ERJ6GEYG472	M.RESISTOR CH 1/10W 4.7K	1	
R40006		ERJ6GEYJ103	M.RESISTOR CH 1/10W 10K	1	
R40007		ERJ6GEYG472	M.RESISTOR CH 1/10W 4.7K	1	
R40008		ERJ6GEYJ223	M.RESISTOR CH 1/10W 22K	1	

Ref.No.		Part No.	Part Name & Description	Pcs	Remarks
R40009		ERJ6GEYJ123	M.RESISTOR CH 1/10W 12K	1	
R40010		ERJ6GEYJ154	M.RESISTOR CH 1/10W 150K	1	
R40011,12		ERJ6GEYJ682	M.RESISTOR CH 1/10W 6.8K	2	
R40013		ERJ6GEYJ273	M.RESISTOR CH 1/10W 27K	1	
R40014		ERJ6GEYJ822	M.RESISTOR CH 1/10W 8.2K	1	
R40015		ERJ6GEYJ104	M.RESISTOR CH 1/10W 100K	1	
R40016		ERJ6GEYG333	M.RESISTOR CH 1/10W 33K	1	
R40017		ERJ6GEYJ104	M.RESISTOR CH 1/10W 100K	1	
R40018		ERJ6GEYJ102	M.RESISTOR CH 1/10W 1K	1	
R40019		ERJ6GEYJ824	M.RESISTOR CH 1/10W 820K	1	
R40020,21		ERJ6GEYG472	M.RESISTOR CH 1/10W 4.7K	2	
R40022		ERJ6GEYJ822	M.RESISTOR CH 1/10W 8.2K	1	
R40023		ERJ6GEYJ562	M.RESISTOR CH 1/10W 5.6K	1	
R40024		ERJ6GEYJ182	M.RESISTOR CH 1/10W 1.8K	1	
R40025		ERJ6GEYJ184	M.RESISTOR CH 1/10W 180K	1	
R40026,27		ERJ6GEYJ102	M.RESISTOR CH 1/10W 1K	2	
R40028		ERJ6GEYJ274	M.RESISTOR CH 1/10W 270K	1	
R40029		ERJ6GEYJ104	M.RESISTOR CH 1/10W 100K	1	
R40030		ERJ6GEYJ123	M.RESISTOR CH 1/10W 12K	1	
R40031		VRE0034E564	M.RESISTOR CH 1/10W 560K	1	
R40032		ERJ6GEYJ123	M.RESISTOR CH 1/10W 12K	1	
R40033		VRE0034E104	M.RESISTOR CH 1/10W 100K	1	
R40034		ERJ6GEYJ473	M.RESISTOR CH 1/10W 47K	1	
R40035		ERJ6GEYJ222	M.RESISTOR CH 1/10W 2.2K	1	
R40036		ERJ6GEYJ221	M.RESISTOR CH 1/10W 220	1	
R40037		ERJ6GEYJ222	M.RESISTOR CH 1/10W 2.2K	1	
R40038		ERJ6GEYJ221	M.RESISTOR CH 1/10W 220	1	
R40039		ERJ6GEYJ473	M.RESISTOR CH 1/10W 47K	1	
R40040		ERJ6GEYJ561	M.RESISTOR CH 1/10W 560	1	
R40041		ERJ6GEYJ393	M.RESISTOR CH 1/10W 39K	1	
R40042		ERJ6GEYJ102	M.RESISTOR CH 1/10W 1K	1	
R40043,44		ERJ6GEYJ104	M.RESISTOR CH 1/10W 100K	2	
R40045		ERJ6GEYJ222	M.RESISTOR CH 1/10W 2.2K	1	
R40046		ERJ6GEYG472	M.RESISTOR CH 1/10W 4.7K	1	
R40047		ERJ6GEYJ473	M.RESISTOR CH 1/10W 47K	1	
R40048		ERJ6GEYJ223	M.RESISTOR CH 1/10W 22K	1	
R40049		ERJ6GEYJ562	M.RESISTOR CH 1/10W 5.6K	1	
R40050,51		ERJ6GEYJ103	M.RESISTOR CH 1/10W 10K	2	
R40052		ERJ6GEYJ105	M.RESISTOR CH 1/10W 1M	1	
R40053		ERJ6GEYJ103	M.RESISTOR CH 1/10W 10K	1	
R40054		ERJ6GEYJ473	M.RESISTOR CH 1/10W 47K	1	
R40055		ERJ6GEYJ332	M.RESISTOR CH 1/10W 3.3K	1	
R40056		ERJ6GEYJ181	M.RESISTOR CH 1/10W 180	1	
R40057		ERJ6GEYJ102	M.RESISTOR CH 1/10W 1K	1	
R40058		ERJ6GEYG472	M.RESISTOR CH 1/10W 4.7K	1	
R40059		ERJ6GEYG333	M.RESISTOR CH 1/10W 33K	1	
R40060		ERJ6GEYJ103	M.RESISTOR CH 1/10W 10K	1	
R40061		ERJ6GEYJ223	M.RESISTOR CH 1/10W 22K	1	
R40062		ERJ6GEYJ564	M.RESISTOR CH 1/10W 560K	1	
R40063		ERJ14YJ330	M.RESISTOR CH 1/4W 33	1	
R40064		ERJ6GEYJ681	M.RESISTOR CH 1/10W 680	1	
R40065		ERJ6GEYG472	M.RESISTOR CH 1/10W 4.7K	1	
R40066		ERJ6GEYJ682	M.RESISTOR CH 1/10W 6.8K	1	
R40067		ERJ6GEYJ102	M.RESISTOR CH 1/10W 1K	1	
R40068		ERJ6GEYJ183	M.RESISTOR CH 1/10W 18K	1	
R40069		ERJ6GEYJ104	M.RESISTOR CH 1/10W 100K	1	
R40070		ERJ6GEYJ823	M.RESISTOR CH 1/10W 82K	1	
R40071		ERJ6GEYJ273	M.RESISTOR CH 1/10W 27K	1	
R40072		ERJ6GEYJ820	M.RESISTOR CH 1/10W 82	1	
R40073		ERJ6GEYJ182	M.RESISTOR CH 1/10W 1.8K	1	
R40074		ERJ6GEYJ223	M.RESISTOR CH 1/10W 22K	1	
R40075		ERJ6GEYJ682	M.RESISTOR CH 1/10W 6.8K	1	
R40076		ERDS1TJ100	C.RESISTOR 1/2W 10	1	
R40077		ERJ6GEYJ562	M.RESISTOR CH 1/10W 5.6K	1	
R40078		ERJ6GEYJ102	M.RESISTOR CH 1/10W 1K	1	
R40079-81		ERJ6GEYG472	M.RESISTOR CH 1/10W 4.7K	3	
R40082		ERJ6GEYJ155	M.RESISTOR CH 1/16W 1.5M	1	
R40083		ERJ6GEYJ392	M.RESISTOR CH 1/10W 3.9K	1	
R40084		ERJ6GEYJ821	M.RESISTOR CH 1/10W 820	1	
R40085		ERJ6GEYJ155	M.RESISTOR CH 1/16W 1.5M	1	
R40086,87		ERJ6GEYJ103	M.RESISTOR CH 1/10W 10K	2	
R40088		ERJ14YJ220	M.RESISTOR CH 1/4W 22K	1	
R40089		ERJ6GEYG333	M.RESISTOR CH 1/10W 33K	1	
R40090		ERJ6GEYJ123	M.RESISTOR CH 1/10W 12K	1	
R40091,92		ERJ6GEYJ562	M.RESISTOR CH 1/10W 5.6K	2	

Ref.No.		Part No.	Part Name & Description	Pcs	Remarks
R40093,94		ERJ6GEYG472	M.RESISTOR CH 1/10W 4.7K	2	
R40095		ERJ6GEYJ103	M.RESISTOR CH 1/10W 10K	1	
R40096		ERJ6GEYG472	M.RESISTOR CH 1/10W 4.7K	1	
R40097		ERJ6GEYJ272	M.RESISTOR CH 1/10W 2.7K	1	
R40098		ERJ6GEYG472	M.RESISTOR CH 1/10W 4.7K	1	
R40099		ERJ6GEYJ123	M.RESISTOR CH 1/10W 12K	1	
R40100		ERJ6GEYJ223	M.RESISTOR CH 1/10W 22K	1	
R40101		ERJ6GEYG472	M.RESISTOR CH 1/10W 4.7K	1	
R40102		ERJ6GEYJ154	M.RESISTOR CH 1/10W 150K	1	
R40103		ERJ6GEYJ123	M.RESISTOR CH 1/10W 12K	1	
R40104		VRE0034E564	M.RESISTOR CH 1/10W 560K	1	
R40105		ERJ6GEYJ123	M.RESISTOR CH 1/10W 12K	1	
R40106		VRE0034E104	M.RESISTOR CH 1/10W 100K	1	
R40107		ERJ6GEYJ473	M.RESISTOR CH 1/10W 47K	1	
R40108		ERJ6GEYJ222	M.RESISTOR CH 1/10W 2.2K	1	
R40109		ERJ6GEYJ221	M.RESISTOR CH 1/10W 220	1	
R40110		ERJ6GEYJ222	M.RESISTOR CH 1/10W 2.2K	1	
R40111		ERJ6GEYJ221	M.RESISTOR CH 1/10W 220	1	
R40112		ERJ6GEYJ473	M.RESISTOR CH 1/10W 47K	1	
R40113		ERJ6GEYJ561	M.RESISTOR CH 1/10W 560	1	
R40114		ERJ6GEYJ393	M.RESISTOR CH 1/10W 39K	1	
R40115		ERJ6GEYJ102	M.RESISTOR CH 1/10W 1K	1	
R40116		ERJ6GEYJ104	M.RESISTOR CH 1/10W 100K	1	
R40117		ERJ6GEYJ223	M.RESISTOR CH 1/10W 22K	1	
R40118		ERJ6GEYJ473	M.RESISTOR CH 1/10W 47K	1	
R40119		ERJ6GEYJ104	M.RESISTOR CH 1/10W 100K	1	
R40120		ERJ6GEYJ562	M.RESISTOR CH 1/10W 5.6K	1	
R40121		ERJ6GEYJ103	M.RESISTOR CH 1/10W 10K	1	
R40122		ERJ6GEYJ222	M.RESISTOR CH 1/10W 2.2K	1	
R40123		ERJ6GEYG472	M.RESISTOR CH 1/10W 4.7K	1	
R40124		ERJ6GEYJ103	M.RESISTOR CH 1/10W 10K	1	
R40125		ERJ6GEYJ105	M.RESISTOR CH 1/10W 1M	1	
R40127		ERJ6GEYG472	M.RESISTOR CH 1/10W 4.7K	1	
R40128		ERJ6GEYJ562	M.RESISTOR CH 1/10W 5.6K	1	
R40129		ERJ6GEYJ822	M.RESISTOR CH 1/10W 8.2K	1	
R40130		ERJ6GEYJ682	M.RESISTOR CH 1/10W 6.8K	1	
R40131		ERJ6GEYJ273	M.RESISTOR CH 1/10W 27K	1	
R40132		ERJ6GEYJ682	M.RESISTOR CH 1/10W 6.8K	1	
R40133		ERJ6GEYG333	M.RESISTOR CH 1/10W 33K	1	
R40134		ERJ6GEYJ104	M.RESISTOR CH 1/10W 100K	1	
R40135		ERJ6GEYJ822	M.RESISTOR CH 1/10W 8.2K	1	
R40136		ERJ6GEYJ104	M.RESISTOR CH 1/10W 100K	1	
R40137		ERJ6GEYJ102	M.RESISTOR CH 1/10W 1K	1	
R40138		ERJ6GEYJ824	M.RESISTOR CH 1/10W 820K	1	
R40139		ERJ6GEYG472	M.RESISTOR CH 1/10W 4.7K	1	
R40140		ERJ6GEYJ182	M.RESISTOR CH 1/10W 1.8K	1	
R40141		ERJ6GEYJ102	M.RESISTOR CH 1/10W 1K	1	
R40142		ERJ6GEYJ184	M.RESISTOR CH 1/10W 180K	1	
R40143		ERJ6GEYJ102	M.RESISTOR CH 1/10W 1K	1	
R40144		ERJ6GEYJ274	M.RESISTOR CH 1/10W 270K	1	
R40145		ERJ6GEYJ104	M.RESISTOR CH 1/10W 100K	1	
R40146		ERJ6GEYJ473	M.RESISTOR CH 1/10W 47K	1	
R40147		ERJ6GEYJ332	M.RESISTOR CH 1/10W 3.3K	1	
R40148		ERJ6GEYJ181	M.RESISTOR CH 1/10W 180	1	
R40149		ERJ6GEYJ102	M.RESISTOR CH 1/10W 1K	1	
R40150		ERJ6GEYG333	M.RESISTOR CH 1/10W 33K	1	
R40151		ERJ6GEYG472	M.RESISTOR CH 1/10W 4.7K	1	
R40152		ERJ6GEYJ103	M.RESISTOR CH 1/10W 10K	1	
R40153		ERJ6GEYJ223	M.RESISTOR CH 1/10W 22K	1	
R40154		ERJ6GEYJ564	M.RESISTOR CH 1/10W 560K	1	
R40155		ERJ6GEYJ820	M.RESISTOR CH 1/10W 82	1	
R40156		ERJ6GEY0R00	M.RESISTOR CH 1/10W 0	1	
R40157		ERJ6GEYJ182	M.RESISTOR CH 1/10W 1.8K	1	
R40158		ERJ6GEYJ104	M.RESISTOR CH 1/10W 100K	1	
R40159		ERJ6GEYJ273	M.RESISTOR CH 1/10W 27K	1	
R40160		ERJ6GEYJ823	M.RESISTOR CH 1/10W 82K	1	
R40161-63		ERJ6GEYJ103	M.RESISTOR CH 1/10W 10K	3	
R40164		ERJ6GEYJ155	M.RESISTOR CH 1/16W 1.5M	1	
R40165		ERJ6GEYJ821	M.RESISTOR CH 1/10W 820	1	
R40166		ERJ6GEYJ392	M.RESISTOR CH 1/10W 3.9K	1	
R40167		ERJ6GEYJ155	M.RESISTOR CH 1/16W 1.5M	1	
R40168		ERJ14YJ330	M.RESISTOR CH 1/4W 33	1	
R40169		ERJ6GEYJ681	M.RESISTOR CH 1/10W 680	1	
R40170		ERJ6GEYG472	M.RESISTOR CH 1/10W 4.7K	1	
R40171		ERJ6GEYJ102	M.RESISTOR CH 1/10W 1K	1	

Ref.No.		Part No.	Part Name & Description	Pcs	Remarks
R40172		ERJ6GEYJ682	M.RESISTOR CH 1/10W 6.8K	1	
R40173		ERJ6GEYJ223	M.RESISTOR CH 1/10W 22K	1	
R40174		ERJ6GEYJ682	M.RESISTOR CH 1/10W 6.8K	1	
R40175		ERDS1TJ100	C.RESISTOR 1/2W 10	1	
R40176		ERJ6GEYJ562	M.RESISTOR CH 1/10W 5.6K	1	
R40177		ERJ6GEYJ102	M.RESISTOR CH 1/10W 1K	1	
R40178-80		ERJ6GEYG472	M.RESISTOR CH 1/10W 4.7K	3	
R40181		ERJ6GEYJ563	M.RESISTOR CH 1/10W 56K	1	
R40182		ERJ6GEYJ104	M.RESISTOR CH 1/10W 100K	1	
R40183		ERJ6GEYJ154	M.RESISTOR CH 1/10W 150K	1	
R40184		ERJ6GEYJ152	M.RESISTOR CH 1/10W 1.5K	1	
R40185		ERJ6GEYJ151	M.RESISTOR CH 1/10W 150	1	
R40186		ERJ6GEYJ471	M.RESISTOR CH 1/10W 470	1	
R40187,88		ERJ6GEYJ103	M.RESISTOR CH 1/10W 10K	2	
R40189		ERJ6GEYJ104	M.RESISTOR CH 1/10W 100K	1	
R40190		ERJ6GEYJ103	M.RESISTOR CH 1/10W 10K	1	
R40191		ERJ6GEYJ222	M.RESISTOR CH 1/10W 2.2K	1	
R40192-99		ERJ6GEYJ103	M.RESISTOR CH 1/10W 10K	8	
R40200		ERJ6GEYJ102	M.RESISTOR CH 1/10W 1K	1	
R40201		ERJ6GEYJ223	M.RESISTOR CH 1/10W 22K	1	
R40202		ERJ6GEYJ563	M.RESISTOR CH 1/10W 56K	1	
R40203		ERJ6GEYG472	M.RESISTOR CH 1/10W 4.7K	1	
R40204		ERJ6GEYJ560	M.RESISTOR CH 1/10W 56	1	
R40205		ERJ6GEYJ222	M.RESISTOR CH 1/10W 2.2K	1	
R40206		ERJ6GEYJ561	M.RESISTOR CH 1/10W 560	1	
R40207,08		ERJ6GEYJ102	M.RESISTOR CH 1/10W 1K	2	
R40209,10		ERJ6GEYJ104	M.RESISTOR CH 1/10W 100K	2	
R40211		ERJ6GEYJ103	M.RESISTOR CH 1/10W 10K	1	
R40212-15		ERJ6GEYJ102	M.RESISTOR CH 1/10W 1K	4	
R40216,17		ERJ6GEYJ104	M.RESISTOR CH 1/10W 100K	2	
R40218		ERJ6GEYJ102	M.RESISTOR CH 1/10W 1K	1	
R40219,20		ERJ6GEYJ103	M.RESISTOR CH 1/10W 10K	2	
R40221		ERJ6GEYJ102	M.RESISTOR CH 1/10W 1K	1	
R40222		ERJ6GEYJ104	M.RESISTOR CH 1/10W 100K	1	
R40223		ERJ6GEYJ102	M.RESISTOR CH 1/10W 1K	1	
R40224-28		ERJ6GEYJ103	M.RESISTOR CH 1/10W 10K	5	
R40229		ERJ6GEYJ151	M.RESISTOR CH 1/10W 150	1	
R40230		ERJ6GEYJ102	M.RESISTOR CH 1/10W 1K	1	
R40231,32		ERJ6GEYJ104	M.RESISTOR CH 1/10W 100K	2	
R40233		ERJ6GEYJ103	M.RESISTOR CH 1/10W 10K	1	
R40234		ERJ6GEYJ104	M.RESISTOR CH 1/10W 100K	1	
R40235,36		ERJ6GEYJ102	M.RESISTOR CH 1/10W 1K	2	
R40237		ERJ6GEYJ103	M.RESISTOR CH 1/10W 10K	1	
R40240,41		ERJ6GEYJ104	M.RESISTOR CH 1/10W 100K	2	
R40242-46		ERJ6GEYJ223	M.RESISTOR CH 1/10W 22K	5	
R40250		ERJ6GEYJ103	M.RESISTOR CH 1/10W 10K	1	
R40251		ERJ6GEYG472	M.RESISTOR CH 1/10W 4.7K	1	
R40252,53		ERJ6GEYJ103	M.RESISTOR CH 1/10W 10K	2	
R40254		ERJ6GEYJ183	M.RESISTOR CH 1/10W 18K	1	
R40255		ERJ6GEYG333	M.RESISTOR CH 1/10W 33K	1	
R40256		ERJ6GEYG472	M.RESISTOR CH 1/10W 4.7K	1	
RY40001,02		VSY2074	RELAY	2	
TL40001		VLT0146	TRANSFORMER	1	
TL40002		VLT0143	TRANSFORMER	1	
TL40003,04		VLT0145	TRANSFORMER	2	
TL40005		VLT0146	TRANSFORMER	1	
VR40002,03		EVN32CA00B23	V.RESISTOR 2K	2	
VR40004		EVN32CA00B15	V.RESISTOR 100K	1	
VR40005		EVN32CA00B53	V.RESISTOR 5K	1	
VR40007,08		EVN32CA00B23	V.RESISTOR 2K	2	
VR40009		EVN32CA00B15	V.RESISTOR 100K	1	
VR40010		EVN32CA00B53	V.RESISTOR 5K	1	
VR40011,12		EVN32CA00B23	V.RESISTOR 2K	2	

Ref.No.		Part No.	Part Name & Description	Pcs	Remarks
			MISCELLANEOUS		
E67		VSC3967	SHIELD CASE	1	
E68		VSC3968	SHIELD CASE (MIDDLE)	1	
E69		VSC3969	SHIELD CASE (LOWER)	1	
E71		VSC3971	SHIELD CASE (MIDDLE)	1	
E72		VSC3972	SHIELD CASE (LOWER,BIAS)	1	

MC-Service

Ref.No.		Part No.	Part Name & Description	Pcs	Remarks
		VEP04420D	P.C.BOARD W/COMPONENT		AG-8600E
			AUDIO (1)		
C40001		ECEA1CGE471	E.CAPACITOR 16V 470U	1	
C40003		ECEA1CGE101	E.CAPACITOR 16V 100U	1	
C40005		ERJ6GEY0R00	M.RESISTOR CH 1/10W 0	1	
C40009		ECEA1HGE100	E.CAPACITOR 50V 10U	1	
C40010		ECEA1CN100S	E.CAPACITOR 16V 10U	1	
C40011		ECEA1HGE100	E.CAPACITOR 50V 10U	1	
C40014		ECEA0JGE221	E.CAPACITOR 6.3V 220U	1	
C40015		ECEA1CGE221	E.CAPACITOR 16V 220U	1	
C40016		ECQV1H334JZ	P.CAPACITOR 50V 0.33U	1	
C40017		ECQB1H104JF	P.CAPACITOR 50V 0.1U	1	
C40018		ECEA1HGE100	E.CAPACITOR 50V 10U	1	
C40019		ECEA1CGE101	E.CAPACITOR 16V 100U	1	
C40020		ECQB1H473JF	P.CAPACITOR 50V 0.047U	1	
C40029		ECSF1EE336	E.CAPACITOR 25V 33U	1	
C40030		ECUM1H182KBN	C.CAPACITOR CH 50V 1800P	1	
C40031,32		ECSF1CE106	T.CAPACITOR 16V 22U	2	
C40033		ECSF1EE106	T.CAPACITOR 25V 10U	1	
C40034		ECSF1HE105	E.CAPACITOR 50V 1U	1	
C40035		ECUM1H102KBN	C.CAPACITOR CH 50V 1000P	1	
C40036		ECSF1CE336	T.CAPACITOR 16V 33U	1	
C40037		ECQB1H823JF	P.CAPACITOR 50V 0.082U	1	
C40038		ECUM1H101JCN	C.CAPACITOR CH 50V 100P	1	
C40039		ECEA1HGE4R7	E.CAPACITOR 50V 4.7U	1	
C40040		ECEA1HGE2R2	E.CAPACITOR 50V 2.2U	1	
C40041,42		ECUM1H223KBN	C.CAPACITOR 50V 0.022U	2	
C40043		ECEA1HGE100	E.CAPACITOR 50V 10U	1	
C40044		ECQB1H472JF	P.CAPACITOR 50V 4700P	1	
C40045		ECQB1H273JF	P.CAPACITOR 50V 0.027U	1	
C40046		ECEA1HGE100	E.CAPACITOR 50V 10U	1	
C40047		ECUM1H102KBN	C.CAPACITOR CH 50V 1000P	1	
C40048		ECQB1H562JF	P.CAPACITOR 50V 5600P	1	
C40049		ECEA1HGE010	E.CAPACITOR 50V 1U	1	
C40050		ECQB1H472JF	P.CAPACITOR 50V 4700P	1	
C40052		ECEA1HGE100	E.CAPACITOR 50V 10U	1	
C40073		ECEA1CGE471	E.CAPACITOR 16V 470U	1	
C40074		ECEA1CGE101	E.CAPACITOR 16V 100U	1	
C40077		ECUM1H182KBN	C.CAPACITOR CH 50V 1800P	1	
C40078		ECSF1EE336	E.CAPACITOR 25V 33U	1	
C40079,80		ECSF1CE106	T.CAPACITOR 16V 22U	2	
C40081		ECSF1EE106	T.CAPACITOR 25V 10U	1	
C40082		ECSF1HE105	E.CAPACITOR 50V 1U	1	
C40083		ECUM1H102KBN	C.CAPACITOR CH 50V 1000P	1	
C40084		ECSF1CE336	T.CAPACITOR 16V 33U	1	
C40085		ECQB1H823JF	P.CAPACITOR 50V 0.082U	1	
C40086		ECEA1HGE4R7	E.CAPACITOR 50V 4.7U	1	
C40087		ECUM1H101JCN	C.CAPACITOR CH 50V 100P	1	
C40088		ECEA1HGE2R2	E.CAPACITOR 50V 2.2U	1	
C40091		ECUM1H223KBN	C.CAPACITOR 50V 0.022U	1	
C40092,93		ECEA1HGE100	E.CAPACITOR 50V 10U	2	
C40094		ECUM1H223KBN	C.CAPACITOR 50V 0.022U	1	
C40095		ECEA1HGE100	E.CAPACITOR 50V 10U	1	
C40096		ECEA1CN100S	E.CAPACITOR 16V 10U	1	
C40100		ERJ6GEY0R00	M.RESISTOR CH 1/10W 0	1	
C40103		ECEA0JGE221	E.CAPACITOR 6.3V 220U	1	
C40104		ECQV1H334JZ	P.CAPACITOR 50V 0.33U	1	
C40105		ECQB1H104JF	P.CAPACITOR 50V 0.1U	1	
C40106		ECEA1HGE100	E.CAPACITOR 50V 10U	1	
C40107		ECQB1H473JF	P.CAPACITOR 50V 0.047U	1	
C40108		ECEA1CGE101	E.CAPACITOR 16V 100U	1	
C40109		ECEA1CGE221	E.CAPACITOR 16V 220U	1	
C40110		ECEA1HGE100	E.CAPACITOR 50V 10U	1	
C40111		ECQB1H273JF	P.CAPACITOR 50V 0.027U	1	
C40112		ECUM1H102KBN	C.CAPACITOR CH 50V 1000P	1	
C40113		ECQB1H472JF	P.CAPACITOR 50V 4700P	1	
C40114		ECQB1H562JF	P.CAPACITOR 50V 5600P	1	
C40115		ECEA1HGE010	E.CAPACITOR 50V 1U	1	
C40116		ECQB1H472JF	P.CAPACITOR 50V 4700P	1	
C40117		ECEA1HGE100	E.CAPACITOR 50V 10U	1	
C40139		ECEA1CGE471	E.CAPACITOR 16V 470U	1	

Ref.No.		Part No.	Part Name & Description	Pcs	Remarks
C40140,41		ECEA1CGE101	E.CAPACITOR 16V 100U	2	
C40142		ECEA1HGE220	E.CAPACITOR 50V 22U	1	
C40143		ECEA1CGE101	E.CAPACITOR 16V 100U	1	
C40144		ECUM1H103KBN	C.CAPACITOR CH 50V 0.01U	1	
C40145		ECEA1VGE330	E.CAPACITOR 50V 33U	1	
C40146		ECQB1H104JF	P.CAPACITOR 50V 0.1U	1	
C40147		ECEA1VGE330	E.CAPACITOR 50V 33U	1	
C40148		ECUM1H330JCN	C.CAPACITOR CH 50V 33P	1	
C40149		ECEA1HGE010	E.CAPACITOR 50V 1U	1	
C40150		ECUM1H102KBN	C.CAPACITOR CH 50V 1000P	1	
C40151		ECEA1VGE330	E.CAPACITOR 50V 33U	1	
C40152		ECEA1CGE101	E.CAPACITOR 16V 100U	1	
C40153		ECUM1H102KBN	C.CAPACITOR CH 50V 1000P	1	
C40154		ECEA1CGE101	E.CAPACITOR 16V 100U	1	
C40155		ECEA1HGE100	E.CAPACITOR 50V 10U	1	
C40156-59		ECUM1H103KBN	C.CAPACITOR CH 50V 0.01U	3	
D40002		MA151K	DIODE	1	<R>
D40004		MA151K	DIODE	1	<R>
D40007		MA151K	DIODE	1	<R>
D40010		MA151K	DIODE	1	<R>
D40014,15		MA151K	DIODE	2	<R>
D40016		MA151WK	DIODE	1	<R>
D40017		MA151K	DIODE	1	<R>
D40018		MA723	DIODE	1	<R>
D40019		MA165VT	DIODE	1	<R>
FL40001,02		VLF0402	FILTER	2	
IC40001		HA12005	IC	1	<R>
IC40002		NE646N	IC	1	<R>
IC40003		HA12005	IC	1	<R>
IC40004		NE646N	IC	1	<R>
IC40006,07		MN1280R	IC	2	<R>
IC40008		AN360	IC	1	<R>
IC40009		MC14053BF	IC	1	<R>
IC40010-12		MC74HC595AF	IC	3	<R>
IC40013-15		TD62503F	IC	3	<R>
IC40021		TC7S32F	IC	1	<R>
J40005		ERJ6GEY0R00	M.RESISTOR CH 1/10W 0	1	
J40008,09		ERJ6GEY0R00	M.RESISTOR CH 1/10W 0	2	
J40020		ERJ6GEY0R00	M.RESISTOR CH 1/10W 0	1	
L40008,09		VLQEL06F102K	COIL 1000UH	2	
P40002		VJP1230R	CONNECTOR (MALE) 3P	1	
P40003		VJP1230T	CONNECTOR (MALE) 3P	1	
P40004		VJP3176B064	CONNECTOR (MALE) 64P	1	
Q40008		2SD636	TRANSISTOR	1	<R>
Q40022,23		2SC2405-S	TRANSISTOR	2	<R>
Q40024		2SD1306	TRANSISTOR	1	<R>
Q40032		2SD636	TRANSISTOR	1	<R>
Q40041,42		2SC2405-S	TRANSISTOR	2	<R>
Q40043		2SD1306	TRANSISTOR	1	<R>
Q40045		MSB709-R	TRANSISTOR	1	<R>
Q40046		2SB710A-R	TRANSISTOR	1	<R>

Ref.No.		Part No.	Part Name & Description	Pcs	Remarks
QR40008-10		MRN2403	TRANSISTOR	3	<R>
QR40011		MRN1403	TRANSISTOR	1	<R>
QR40012		MRN1402	TRANSISTOR	1	<R>
QR40020-22		MRN2403	TRANSISTOR	3	<R>
QR40023		MRN1403	TRANSISTOR	1	<R>
QR40024		MRN1402	TRANSISTOR	1	<R>
R40010		ERJ6GEYJ154	M.RESISTOR CH 1/10W 150K	1	
R40011,12		ERJ6GEYJ682	M.RESISTOR CH 1/10W 6.8K	2	
R40022		ERJ6GEYJ822	M.RESISTOR CH 1/10W 8.2K	1	
R40024		ERJ6GEYJ182	M.RESISTOR CH 1/10W 1.8K	1	
R40025		ERJ6GEYJ184	M.RESISTOR CH 1/10W 180K	1	
R40026,27		ERJ6GEYJ102	M.RESISTOR CH 1/10W 1K	2	
R40028		ERJ6GEYJ274	M.RESISTOR CH 1/10W 270K	1	
R40029		ERJ6GEYJ104	M.RESISTOR CH 1/10W 100K	1	
R40031		VRE0034E564	M.RESISTOR CH 1/10W 560K	1	
R40032		ERJ6GEYJ123	M.RESISTOR CH 1/10W 12K	1	
R40033		VRE0034E104	M.RESISTOR CH 1/10W 100K	1	
R40034		ERJ6GEYJ473	M.RESISTOR CH 1/10W 47K	1	
R40035		ERJ6GEYJ222	M.RESISTOR CH 1/10W 2.2K	1	
R40036		ERJ6GEYJ221	M.RESISTOR CH 1/10W 220	1	
R40037		ERJ6GEYJ222	M.RESISTOR CH 1/10W 2.2K	1	
R40038		ERJ6GEYJ221	M.RESISTOR CH 1/10W 220	1	
R40039		ERJ6GEYJ473	M.RESISTOR CH 1/10W 47K	1	
R40040		ERJ6GEYJ561	M.RESISTOR CH 1/10W 560	1	
R40041		ERJ6GEYJ393	M.RESISTOR CH 1/10W 39K	1	
R40042		ERJ6GEYJ102	M.RESISTOR CH 1/10W 1K	1	
R40043		ERJ6GEYJ104	M.RESISTOR CH 1/10W 100K	1	
R40045		ERJ6GEYJ222	M.RESISTOR CH 1/10W 2.2K	1	
R40046		ERJ6GEYG472	M.RESISTOR CH 1/10W 4.7K	1	
R40048		ERJ6GEYJ223	M.RESISTOR CH 1/10W 22K	1	
R40049		ERJ6GEYJ562	M.RESISTOR CH 1/10W 5.6K	1	
R40050,51		ERJ6GEYJ103	M.RESISTOR CH 1/10W 10K	2	
R40052		ERJ6GEYJ105	M.RESISTOR CH 1/10W 1M	1	
R40053		ERJ6GEYJ103	M.RESISTOR CH 1/10W 10K	1	
R40054		ERJ6GEYJ473	M.RESISTOR CH 1/10W 47K	1	
R40055		ERJ6GEYJ332	M.RESISTOR CH 1/10W 3.3K	1	
R40056		ERJ6GEYJ181	M.RESISTOR CH 1/10W 180	1	
R40057		ERJ6GEYJ102	M.RESISTOR CH 1/10W 1K	1	
R40058		ERJ6GEYG472	M.RESISTOR CH 1/10W 4.7K	1	
R40059		ERJ6GEYG333	M.RESISTOR CH 1/10W 33K	1	
R40102		ERJ6GEYJ154	M.RESISTOR CH 1/10W 150K	1	
R40104		VRE0034E564	M.RESISTOR CH 1/10W 560K	1	
R40105		ERJ6GEYJ123	M.RESISTOR CH 1/10W 12K	1	
R40106		VRE0034E104	M.RESISTOR CH 1/10W 100K	1	
R40107		ERJ6GEYJ473	M.RESISTOR CH 1/10W 47K	1	
R40108		ERJ6GEYJ222	M.RESISTOR CH 1/10W 2.2K	1	
R40109		ERJ6GEYJ221	M.RESISTOR CH 1/10W 220	1	
R40110		ERJ6GEYJ222	M.RESISTOR CH 1/10W 2.2K	1	
R40111		ERJ6GEYJ221	M.RESISTOR CH 1/10W 220	1	
R40112		ERJ6GEYJ473	M.RESISTOR CH 1/10W 47K	1	
R40113		ERJ6GEYJ561	M.RESISTOR CH 1/10W 560	1	
R40114		ERJ6GEYJ393	M.RESISTOR CH 1/10W 39K	1	
R40115		ERJ6GEYJ102	M.RESISTOR CH 1/10W 1K	1	
R40116		ERJ6GEYJ104	M.RESISTOR CH 1/10W 100K	1	
R40117		ERJ6GEYJ223	M.RESISTOR CH 1/10W 22K	1	
R40120		ERJ6GEYJ562	M.RESISTOR CH 1/10W 5.6K	1	
R40121		ERJ6GEYJ103	M.RESISTOR CH 1/10W 10K	1	
R40122		ERJ6GEYJ222	M.RESISTOR CH 1/10W 2.2K	1	
R40123		ERJ6GEYG472	M.RESISTOR CH 1/10W 4.7K	1	
R40124		ERJ6GEYJ103	M.RESISTOR CH 1/10W 10K	1	
R40125		ERJ6GEYJ105	M.RESISTOR CH 1/10W 1M	1	
R40129		ERJ6GEYJ822	M.RESISTOR CH 1/10W 8.2K	1	
R40130		ERJ6GEYJ682	M.RESISTOR CH 1/10W 6.8K	1	
R40132		ERJ6GEYJ682	M.RESISTOR CH 1/10W 6.8K	1	
R40140		ERJ6GEYJ182	M.RESISTOR CH 1/10W 1.8K	1	
R40141		ERJ6GEYJ102	M.RESISTOR CH 1/10W 1K	1	
R40142		ERJ6GEYJ184	M.RESISTOR CH 1/10W 180K	1	
R40143		ERJ6GEYJ102	M.RESISTOR CH 1/10W 1K	1	
R40144		ERJ6GEYJ274	M.RESISTOR CH 1/10W 270K	1	
R40145		ERJ6GEYJ104	M.RESISTOR CH 1/10W 100K	1	
R40146		ERJ6GEYJ473	M.RESISTOR CH 1/10W 47K	1	
R40147		ERJ6GEYJ332	M.RESISTOR CH 1/10W 3.3K	1	

Ref.No.		Part No.	Part Name & Description	Pcs	Remarks
R40148		ERJ6GEYJ181	M.RESISTOR CH 1/10W 180	1	
R40149		ERJ6GEYJ102	M.RESISTOR CH 1/10W 1K	1	
R40150		ERJ6GEYG333	M.RESISTOR CH 1/10W 33K	1	
R40151		ERJ6GEYG472	M.RESISTOR CH 1/10W 4.7K	1	
R40181		ERJ6GEYJ563	M.RESISTOR CH 1/10W 56K	1	
R40182		ERJ6GEYJ104	M.RESISTOR CH 1/10W 100K	1	
R40183		ERJ6GEYJ154	M.RESISTOR CH 1/10W 150K	1	
R40184		ERJ6GEYJ152	M.RESISTOR CH 1/10W 1.5K	1	
R40185		ERJ6GEYJ151	M.RESISTOR CH 1/10W 150	1	
R40186		ERJ6GEYJ471	M.RESISTOR CH 1/10W 470	1	
R40187,88		ERJ6GEYJ103	M.RESISTOR CH 1/10W 10K	2	
R40189		ERJ6GEYJ104	M.RESISTOR CH 1/10W 100K	1	
R40190		ERJ6GEYJ103	M.RESISTOR CH 1/10W 10K	1	
R40191		ERJ6GEYJ222	M.RESISTOR CH 1/10W 2.2K	1	
R40192-99		ERJ6GEYJ103	M.RESISTOR CH 1/10W 10K	8	
R40200		ERJ6GEYJ102	M.RESISTOR CH 1/10W 1K	1	
R40201		ERJ6GEYJ223	M.RESISTOR CH 1/10W 22K	1	
R40202		ERJ6GEYJ563	M.RESISTOR CH 1/10W 56K	1	
R40203		ERJ6GEYG472	M.RESISTOR CH 1/10W 4.7K	1	
R40204		ERJ6GEYJ560	M.RESISTOR CH 1/10W 56	1	
R40205		ERJ6GEYJ222	M.RESISTOR CH 1/10W 2.2K	1	
R40206		ERJ6GEYJ561	M.RESISTOR CH 1/10W 560	1	
R40207		ERJ6GEYJ102	M.RESISTOR CH 1/10W 1K	1	
R40242-46		ERJ6GEYJ223	M.RESISTOR CH 1/10W 22K	5	
RY40001		VSY2074	RELAY	1	
VR40002,03		EVN32CA00B23	V.RESISTOR 2K	2	
VR40007,08		EVN32CA00B23	V.RESISTOR 2K	2	
			MISCELLANEOUS		
E67		VSC3967	SHIELD CASE	1	
E68		VSC3968	SHIELD CASE (MIDDLE)	1	
E69		VSC3969	SHIELD CASE (LOWER)	1	

Ref.No.		Part No.	Part Name & Description	Pcs	Remarks
		VEP04421C	P.C.BOARD W/COMPONENT		AG-8700E
			AUDIO (2)		
C41001		ECEA1CGE471	E.CAPACITOR 16V 470U	1	
C41002		ECUM1H103ZFN	C.CAPACITOR 50V 0.01U	1	
C41003,04		ECEA1HGE3R3	E.CAPACITOR 50V 3.3U	2	
C41005		ECQB1H682JF	P.CAPACITOR 50V 6800P	1	
C41006		ECUM1H102JCN	C.CAPACITOR CH 50V 1000P	1	
C41007		ECQB1H223JF	P.CAPACITOR 50V 0.022U	1	
C41008		ECEA1HGE100	E.CAPACITOR 50V 10U	1	
C41009		ECEA1HGE4R7	E.CAPACITOR 50V 4.7U	1	
C41010		ECQB1H223JF	P.CAPACITOR 50V 0.022U	1	
C41011		ECEA1CGE470	E.CAPACITOR 16V 47U	1	
C41012		ECQB1H103JF	P.CAPACITOR 50V 0.01U	1	
C41013		ECQB1H332JF	P.CAPACITOR 50V 3300P	1	
C41014-16		ECUM1H102JCN	C.CAPACITOR CH 50V 1000P	3	
C41017		ECEA1HGE4R7	E.CAPACITOR 50V 4.7U	1	
C41018		ECUM1H104ZFN	C.CAPACITOR 50V 0.1U	1	
C41019		ECUM1H103ZFN	C.CAPACITOR 50V 0.01U	1	
C41020		ECEA1AGE101	E.CAPACITOR 10V 100U	1	
C41021,22		ECUM1H103ZFN	C.CAPACITOR 50V 0.01U	2	
C41023		ECEA1AGE101	E.CAPACITOR 10V 100U	1	
C41024		ECEA1CGE470	E.CAPACITOR 16V 47U	1	
C41025		ECQB1H104JF	P.CAPACITOR 50V 0.1U	1	
C41026		ECUM1H103ZFN	C.CAPACITOR 50V 0.01U	1	
C41027		ECUM1H102JCN	C.CAPACITOR CH 50V 1000P	1	
C41028		ECUM1H331JCN	C.CAPACITOR CH 50V 330P	1	
C41029		ECQB1H104JF	P.CAPACITOR 50V 0.1U	1	
C41030		ECEA1VGE330	E.CAPACITOR 35V 33U	1	
C41031		ECQV1H274JZ	P.CAPACITOR 50V 0.27U	1	
C41032,33		ECUM1H103ZFN	C.CAPACITOR 50V 0.01U	2	
C41034		ECEA1AGE101	E.CAPACITOR 10V 100U	1	
C41035-37		ECUM1H103ZFN	C.CAPACITOR 50V 0.01U	3	
C41038		ECUM1H101JCN	C.CAPACITOR CH 50V 100P	1	
C41039		ECUM1H103ZFN	C.CAPACITOR 50V 0.01U	1	
C41040		ECUM1H104ZFN	C.CAPACITOR 50V 0.1U	1	
C41041		ECEA1HGE4R7	E.CAPACITOR 50V 4.7U	1	
C41042-44		ECUM1H102JCN	C.CAPACITOR CH 50V 1000P	3	
C41045		ECQB1H332JF	P.CAPACITOR 50V 3300P	1	
C41046		ECQB1H103JF	P.CAPACITOR 50V 0.01U	1	
C41047		ECEA1CGE470	E.CAPACITOR 16V 47U	1	
C41048,49		ECQB1H223JF	P.CAPACITOR 50V 0.022U	2	
C41050		ECEA1HGE100	E.CAPACITOR 50V 10U	1	
C41051		ECUM1H102JCN	C.CAPACITOR CH 50V 1000P	1	
C41052		ECQB1H682JF	P.CAPACITOR 50V 6800P	1	
C41053,54		ECEA1EN4R7S	E.CAPACITOR 25V 4.7U	2	
C41055,56		ECEA1HGE100	E.CAPACITOR 50V 10U	2	
C41057		ECEA1CGE470	E.CAPACITOR 16V 47U	1	
C41058		ECEA1HGE220	E.CAPACITOR 50V 22U	1	
C41059		ECEA1CGE470	E.CAPACITOR 16V 47U	1	
C41060		ECEA1AGE101	E.CAPACITOR 10V 100U	1	
C41061		ECUM1H103ZFN	C.CAPACITOR 50V 0.01U	1	
C41062		ECEA1AGE101	E.CAPACITOR 10V 100U	1	
C41063,64		ECEA1HGE010	E.CAPACITOR 50V 1U	2	
C41065,66		ECEA1CGE470	E.CAPACITOR 16V 47U	2	
C41067,68		ECEA1CN100S	E.CAPACITOR 16V 10U	2	
C41069,70		ECEA1HGE4R7	E.CAPACITOR 50V 4.7U	2	
C41071		ECUM1H103ZFN	C.CAPACITOR 50V 0.01U	1	
C41072-74		ECEA1CGE470	E.CAPACITOR 16V 47U	3	
C41075		ECEA1AGE221	E.CAPACITOR 10V 220U	1	
C41076		ECEA1VGE330	E.CAPACITOR 35V 33U	1	
C41077		ECEA0JGE101	E.CAPACITOR 6.3V 100U	1	
C41078		ECUM1H100DCN	C.CAPACITOR CH 50V 10P	1	
C41079		ECEA1HGE100	E.CAPACITOR 50V 10U	1	
C41080		ECEA1CGE470	E.CAPACITOR 16V 47U	1	
C41081		ECUM1H102KBN	C.CAPACITOR CH 50V 1000P	1	
C41082		ECEA1CGE221	E.CAPACITOR 16V 220U	1	
C41083		ECEA1CN100S	E.CAPACITOR 16V 10U	1	
C41084		ECEA1CGE470	E.CAPACITOR 16V 47U	1	
C41085		ECQB1H472JF	P.CAPACITOR 50V 4700P	1	
C41086,87		ECEA1HGE100	E.CAPACITOR 50V 10U	2	
C41088		ECEA1CGE470	E.CAPACITOR 16V 47U	1	

Ref.No.		Part No.	Part Name & Description	Pcs	Remarks
C41089		ECEA1HGE100	E.CAPACITOR 50V 10U	1	
C41090		ECEA1CGE470	E.CAPACITOR 16V 47U	1	
C41091		ECUM1H101JCN	C.CAPACITOR CH 50V 100P	1	
C41092		ECEA1CGE470	E.CAPACITOR 16V 47U	1	
C41093		ECEA1HGE100	E.CAPACITOR 50V 10U	1	
C41094-96		ECEA1CGE470	E.CAPACITOR 16V 47U	3	
C41097,98		ECUM1H103ZFN	C.CAPACITOR 50V 0.01U	2	
C41099		ECUM1H102JCN	C.CAPACITOR CH 50V 1000P	1	
C41100		ECUM1H050CCN	C.CAPACITOR CH 50V 5P	1	
C41101		ECUM1H103ZFN	C.CAPACITOR 50V 0.01U	1	
C41102,03		ECUM1H331JCN	C.CAPACITOR CH 50V 330P	2	
C41104		ECUM1H101JCN	C.CAPACITOR CH 50V 100P	1	
C41106-08		ECUM1H103ZFN	C.CAPACITOR 50V 0.01U	3	
C41109		ECEA1CGE470	E.CAPACITOR 16V 47U	1	
C41110,11		ECUM1H103ZFN	C.CAPACITOR 50V 0.01U	2	
C41112,13		ECUM1H331JCN	C.CAPACITOR CH 50V 330P	2	
C41114		ECUM1H101JCN	C.CAPACITOR CH 50V 100P	1	
C41116		ECEA1CGE101	E.CAPACITOR 16V 100U	1	
C41117		ECEA1CGE470	E.CAPACITOR 16V 47U	1	
C41118		ECEA1CGE101	E.CAPACITOR 16V 100U	1	
C41119		ECEA1CGE471	E.CAPACITOR 16V 470U	1	
C41120		ECEA1CGE470	E.CAPACITOR 16V 47U	1	
C41121		ECEA1HGE4R7	E.CAPACITOR 50V 4.7U	1	
C41122		ECEA1CGE470	E.CAPACITOR 16V 47U	1	
C41123		ECEA1HGE220	E.CAPACITOR 50V 22U	1	
C41124		ECEA1CGE101	E.CAPACITOR 16V 100U	1	
C41130		ECUM1H103ZFN	C.CAPACITOR 50V 0.01U	1	
D41001,02		1SS133	DIODE	2	<R>
D41007,08		MA4068M	DIODE	2	<R>
D41009		MA151K	DIODE	1	<R>
D41010,11		MA157	DIODE	2	<R>
D41012,13		MA3030	DIODE	2	<R>
D41014		MA3068	DIODE	1	<R>
D41015,16		MA151K	DIODE	2	<R>
D41017		MA153	DIODE	1	<R>
FL41001		VLF0697	FILTER	1	
IC41001		BA7705K1	IC	1	<R>
IC41002		AN78N05	IC	1	<R>
IC41003		AN3912	IC	1	<R>
IC41004		UPC4558G2	IC	1	<R>
IC41005		UPC393G2	IC	1	<R>
IC41006		MC14053BF	IC	1	<R>
IC41007		UPC4558G2	IC	1	<R>
IC41008		NJM2068MD	IC	1	<R>
IC41009		UPC4558G2	IC	1	<R>
IC41010-12		MC14053BF	IC	3	<R>
IC41013		UPC4558G2	IC	1	<R>
IC41014		MC14053BF	IC	1	<R>
IC41015		UPC4556G2	IC	1	<R>
IC41016,17		AN6558S	IC	2	<R>
L41001-03		VLQEL05S101J	COIL 100UH	3	
L41004-08		VLQEL06F102K	COIL 1000UH	5	
L41009,10		VLQEL05S101J	COIL 100UH	2	
L41011		VLQ0599J120T	COIL	1	
L41012		VLQEL05S101J	COIL 100UH	1	
P41001		VJP3078	CONNECTOR (MALE)	1	
P41002		VJP3529	CONNECTOR	1	
P41003		VJP3176B064	CONNECTOR (MALE) 64P	1	

Ref.No.	Part No.	Part Name & Description	Pcs	Remarks
Q41001	2SB709A-R	TRANSISTOR	1	<R>
Q41002,03	2SD1306	TRANSISTOR	2	<R>
Q41004	2SD636-R	TRANSISTOR	1	<R>
Q41005	XN1501	TRANSISTOR-TRANSISTOR	1	<R>
Q41006,07	MSD601-R	TRANSISTOR	2	<R>
Q41008	2SD1306	TRANSISTOR	1	<R>
Q41009	2SD638	TRANSISTOR	1	<R>
Q41010	2SB643	TRANSISTOR	1	<R>
Q41011	2SD1306	TRANSISTOR	1	<R>
Q41012-14	MSD601-R	TRANSISTOR	3	<R>
Q41015	2SD1328-R	TRANSISTOR	1	<R>
Q41016	2SD602A	TRANSISTOR	1	<R>
Q41017,18	2SD1306	TRANSISTOR	2	<R>
Q41019	2SC2404	TRANSISTOR	1	<R>
Q41020	MSC2295-B	TRANSISTOR	1	<R>
Q41021	MSD601-R	TRANSISTOR	1	<R>
Q41022-24	2SD602A-R	TRANSISTOR	3	<R>
Q41025	2SB644	TRANSISTOR	1	<R>
Q41026	2SD639	TRANSISTOR	1	<R>
Q41027	2SC2404	TRANSISTOR	1	<R>
Q41028	MSD601-R	TRANSISTOR	1	<R>
Q41029,30	2SD602A-R	TRANSISTOR	2	<R>
Q41031	2SB644	TRANSISTOR	1	<R>
Q41032	2SD639	TRANSISTOR	1	<R>
Q41033	2SC2404	TRANSISTOR	1	<R>
Q41034	2SD602A-R	TRANSISTOR	1	<R>
Q41035	2SB793	TRANSISTOR	1	<R>
Q41036	2SB710	TRANSISTOR	1	<R>
Q41037	2SD1306	TRANSISTOR	1	<R>
Q41038,39	2SD1328-R	TRANSISTOR	2	<R>
Q41040	2SD1306	TRANSISTOR	1	<R>
Q41041,42	2SD1328-R	TRANSISTOR	2	<R>
Q41043	2SD1306	TRANSISTOR	1	<R>
Q41044,45	2SD1328-R	TRANSISTOR	2	<R>
Q41046	2SD1306	TRANSISTOR	1	<R>
Q41047,48	2SD1328-R	TRANSISTOR	2	<R>
Q41049	2SD601	TRANSISTOR	1	<R>
Q41050	2SD973	TRANSISTOR	1	<R>
Q41051,52	2SD1306	TRANSISTOR	2	<R>
Q41053	2SB709A-R	TRANSISTOR	1	<R>
Q41110,11	2SC1740SX	TRANSISTOR	2	<R>
QR41002,03	MRN2403	TRANSISTOR	2	<R>
QR41004,05	MRN1403	TRANSISTOR	2	<R>
QR41006,07	MRN1404	TRANSISTOR	2	<R>
QR41008	MRN1403	TRANSISTOR	1	<R>
QR41009	MRN2404	TRANSISTOR	1	<R>
QR41010,11	MRN1404	TRANSISTOR	2	<R>
QR41012	MRN1402	TRANSISTOR	1	<R>
R41001,02	ERJ6GEYJ562	M.RESISTOR CH 1/10W 5.6K	2	
R41003,04	ERJ6GEYJ102	M.RESISTOR CH 1/10W 1K	2	
R41005,06	ERJ6GEYJ473	M.RESISTOR CH 1/10W 47K	2	
R41007	ERJ6GEYJ225	M.RESISTOR CH 1/10W 2.2M	1	
R41008,09	ERJ6GEYJ331	M.RESISTOR CH 1/10W 330	2	
R41010,11	ERJ6GEYG821	M.RESISTOR CH 1/10W 820	2	
R41012	ERJ6GEYG681	M.RESISTOR CH 1/10W 680	1	
R41013	VRE0034E112	M.RESISTOR CH 1/10W 1.1K	1	
R41014	VRE0034E103	M.RESISTOR CH 1/10W 10K	1	
R41015	ERJ6GEYG183	M.RESISTOR CH 1/10W 18K	1	
R41016	ERJ6GEYG562	M.RESISTOR CH 1/10W 5.6K	1	
R41017	ERJ6GEYG104	M.RESISTOR CH 1/10W 100K	1	
R41018	ERJ6GEYG303	M.RESISTOR CH 1/10W 30K	1	
R41019	ERJ6GEYJ123	M.RESISTOR CH 1/10W 12K	1	
R41020	ERJ6GEYJ102	M.RESISTOR CH 1/10W 1K	1	
R41021	VRE0034E393	M.RESISTOR CH 1/10W 39K	1	
R41022	ERJ6GEYJ102	M.RESISTOR CH 1/10W 1K	1	
R41023,24	VRE0034E223	M.RESISTOR CH 1/10W 22K	2	
R41025	ERJ6GEYG163	M.RESISTOR CH 1/10W 16K	1	
R41026	ERJ6GEYJ105	M.RESISTOR CH 1/10W 1M	1	
R41027	ERJ6GEYJ102	M.RESISTOR CH 1/10W 1K	1	
R41028,29	ERJ6GEYJ473	M.RESISTOR CH 1/10W 47K	2	
R41030	ERJ6GEYJ102	M.RESISTOR CH 1/10W 1K	1	
R41031	ERJ6GEYJ823	M.RESISTOR CH 1/10W 82K	1	
R41032	ERJ6GEYJ182	M.RESISTOR CH 1/10W 1.8K	1	
R41033,34	ERJ6GEYJ152	M.RESISTOR CH 1/10W 1.5K	2	
R41035	ERJ6GEYJ182	M.RESISTOR CH 1/10W 1.8K	1	
R41036,37	ERJ6GEYJ562	M.RESISTOR CH 1/10W 5.6K	2	
R41038	ERJ6GEYJ181	M.RESISTOR CH 1/10W 180	1	
R41039	ERJ6GEYG103	M.RESISTOR CH 1/10W 10K	1	
R41040	ERJ6GEYG303	M.RESISTOR CH 1/10W 30K	1	
R41041	ERJ6GEYG104	M.RESISTOR CH 1/10W 100K	1	
R41042	ERJ6GEYG562	M.RESISTOR CH 1/10W 5.6K	1	
R41043	ERJ6GEYG183	M.RESISTOR CH 1/10W 18K	1	
R41044	VRE0034E103	M.RESISTOR CH 1/10W 10K	1	
R41045	VRE0034E112	M.RESISTOR CH 1/10W 1.1K	1	
R41046	ERJ6GEYG681	M.RESISTOR CH 1/10W 680	1	
R41047,48	ERJ6GEYG821	M.RESISTOR CH 1/10W 820	2	
R41049	ERJ6GEYJ104	M.RESISTOR CH 1/10W 100K	1	
R41050	ERJ6GEYJ182	M.RESISTOR CH 1/10W 1.8K	1	
R41051	ERJ6GEYJ821	M.RESISTOR CH 1/10W 820	1	
R41052	ERJ6GEYJ330	M.RESISTOR CH 1/10W 33	1	
R41053	ERJ6GEYJ102	M.RESISTOR CH 1/10W 1K	1	
R41054,55	ERJ6GEYJ223	M.RESISTOR CH 1/10W 22K	2	
R41057	ERJ6GEYJ332	M.RESISTOR CH 1/10W 3.3K	1	
R41058	ERJ6GEYJ222	M.RESISTOR CH 1/10W 2.2K	1	
R41059	ERJ6GEYJ822	M.RESISTOR CH 1/10W 8.2K	1	
R41062	ERJ6GEYJ392	M.RESISTOR CH 1/10W 3.9K	1	
R41063	ERJ6GEYJ332	M.RESISTOR CH 1/10W 3.3K	1	
R41064	ERJ6GEYJ392	M.RESISTOR CH 1/10W 3.9K	1	
R41065	ERJ6GEYJ332	M.RESISTOR CH 1/10W 3.3K	1	
R41066-71	ERJ6GEYJ103	M.RESISTOR CH 1/10W 10K	6	
R41072,73	ERJ6GEYJ561	M.RESISTOR CH 1/10W 560	2	
R41074	ERJ6GEYJ103	M.RESISTOR CH 1/10W 10K	1	
R41075,76	ERJ6GEYJ331	M.RESISTOR CH 1/10W 330	2	
R41077	ERJ6GEYJ102	M.RESISTOR CH 1/10W 1K	1	
R41078	ERJ6GEYJ103	M.RESISTOR CH 1/10W 10K	1	
R41079	ERJ6GEYJ562	M.RESISTOR CH 1/10W 5.6K	1	
R41080	ERJ6GEYJ103	M.RESISTOR CH 1/10W 10K	1	
R41081	ERJ6GEYJ105	M.RESISTOR CH 1/10W 1M	1	
R41082	ERJ6GEYJ102	M.RESISTOR CH 1/10W 1K	1	
R41083,84	ERJ6GEYJ103	M.RESISTOR CH 1/10W 10K	2	
R41085	ERJ6GEYJ222	M.RESISTOR CH 1/10W 2.2K	1	
R41086	ERJ6GEYJ104	M.RESISTOR CH 1/10W 100K	1	
R41087	ERJ6GEYJ102	M.RESISTOR CH 1/10W 1K	1	
R41088	ERJ6GEYJ182	M.RESISTOR CH 1/10W 1.8K	1	
R41089	ERJ6GEYJ272	M.RESISTOR CH 1/10W 2.7K	1	
R41090	ERJ6GEYJ103	M.RESISTOR CH 1/10W 10K	1	
R41091-94	ERJ6GEYJ102	M.RESISTOR CH 1/10W 1K	4	
R41095	ERJ6GEY0R00	M.RESISTOR CH 1/10W 0	1	
R41096	ERJ6GEYJ103	M.RESISTOR CH 1/10W 10K	1	
R41097	ERJ6GEYJ680	M.RESISTOR CH 1/10W 68	1	
R41098	ERJ6GEYJ104	M.RESISTOR CH 1/10W 100K	1	
R41099	ERJ6GEYJ102	M.RESISTOR CH 1/10W 1K	1	
R41100	VRE0034E302	M.RESISTOR CH 1/10W 3K	1	
R41101	ERJ6GEYJ562	M.RESISTOR CH 1/10W 5.6K	1	
R41102	ERJ6GEYJ103	M.RESISTOR CH 1/10W 10K	1	
R41103	ERJ6GEYJ473	M.RESISTOR CH 1/10W 47K	1	
R41104	ERJ6GEYJ102	M.RESISTOR CH 1/10W 1K	1	
R41105,06	ERJ6GEYJ103	M.RESISTOR CH 1/10W 10K	2	
R41107,08	ERJ6GEYJ104	M.RESISTOR CH 1/10W 100K	2	
R41109-11	ERJ6GEYJ103	M.RESISTOR CH 1/10W 10K	3	
R41112	ERJ6GEYJ222	M.RESISTOR CH 1/10W 2.2K	1	
R41113	ERJ6GEYJ334	M.RESISTOR CH 1/10W 330K	1	
R41115	ERJ6GEYJ103	M.RESISTOR CH 1/10W 10K	1	
R41116	ERJ6GEYJ221	M.RESISTOR CH 1/10W 220	1	
R41117	ERJ6GEYJ223	M.RESISTOR CH 1/10W 22K	1	
R41118	ERJ6GEYJ102	M.RESISTOR CH 1/10W 1K	1	
R41119	ERJ6GEYJ103	M.RESISTOR CH 1/10W 10K	1	
R41120	ERJ6GEY0R00	M.RESISTOR CH 1/10W 0	1	
R41121	ERJ6GEYJ103	M.RESISTOR CH 1/10W 10K	1	
R41122	ERJ6GEYJ391	M.RESISTOR CH 1/10W 390	1	
R41123	ERJ6GEYG472	M.RESISTOR CH 1/10W 4.7K	1	
R41124	ERJ6GEYJ123	M.RESISTOR CH 1/10W 12K	1	
R41125	ERJ6GEYG472	M.RESISTOR CH 1/10W 4.7K	1	

Ref.No.	Part No.	Part Name & Description	Pcs	Remarks
R41126	ERJ6GEYJ123	M.RESISTOR CH 1/10W 12K	1	
R41127,28	ERJ6GEYJ470	M.RESISTOR CH 1/10W 47	2	
R41129	ERJ6GEYJ561	M.RESISTOR CH 1/10W 560	1	
R41130	ERJ6GEYJ102	M.RESISTOR CH 1/10W 1K	1	
R41131	ERJ6GEYJ103	M.RESISTOR CH 1/10W 10K	1	
R41132,33	ERJ6GEYJ470	M.RESISTOR CH 1/10W 47	2	
R41134	ERJ6GEYJ561	M.RESISTOR CH 1/10W 560	1	
R41135	ERJ6GEYJ102	M.RESISTOR CH 1/10W 1K	1	
R41136	ERJ6GEYJ103	M.RESISTOR CH 1/10W 10K	1	
R41137	ERJ6GEYK1R0	M.RESISTOR CH 1/16W 1.0	1	
R41138	ERJ6GEYJ223	M.RESISTOR CH 1/10W 22K	1	
R41139	ERJ6GEYG333	M.RESISTOR CH 1/10W 33K	1	
R41140	ERJ6GEYJ103	M.RESISTOR CH 1/10W 10K	1	
R41141	ERJ6GEYJ272	M.RESISTOR CH 1/10W 2.7K	1	
R41142	ERJ6GEYJ123	M.RESISTOR CH 1/10W 12K	1	
R41143	ERJ6GEYJ223	M.RESISTOR CH 1/10W 22K	1	
R41144	ERJ6GEYG153	M.RESISTOR CH 1/10W 15K	1	
R41145	ERJ6GEYJ102	M.RESISTOR CH 1/10W 1K	1	
R41146	ERJ6GEYJ392	M.RESISTOR CH 1/10W 3.9K	1	
R41147	ERJ6GEYJ391	M.RESISTOR CH 1/10W 390	1	
R41148	ERJ6GEYJ562	M.RESISTOR CH 1/10W 5.6K	1	
R41149	ERJ6GEYJ103	M.RESISTOR CH 1/10W 10K	1	
R41150	ERJ6GEYJ222	M.RESISTOR CH 1/10W 2.2K	1	
R41151	ERJ6GEYJ331	M.RESISTOR CH 1/10W 330	1	
R41152	ERJ6GEYJ3R3	M.RESISTOR CH 1/10W 3.3	1	
R41153	ERJ6GEYJ122	M.RESISTOR CH 1/10W 1.2K	1	
R41154	ERJ6GEYJ3R3	M.RESISTOR CH 1/10W 3.3	1	
R41155,56	ERJ6GEYJ222	M.RESISTOR CH 1/10W 2.2K	2	
R41157	ERJ6GEYJ122	M.RESISTOR CH 1/10W 1.2K	1	
R41158	ERJ6GEYJ222	M.RESISTOR CH 1/10W 2.2K	1	
R41159,60	ERJ6GEYG153	M.RESISTOR CH 1/10W 15K	2	
R41161	ERJ6GEYJ222	M.RESISTOR CH 1/10W 2.2K	1	
R41162,63	ERJ6GEYJ270	M.RESISTOR CH 1/10W 27	2	
R41164	ERJ6GEYJ152	M.RESISTOR CH 1/10W 1.5K	1	
R41165	ERJ6GEYJ392	M.RESISTOR CH 1/10W 3.9K	1	
R41167	ERJ6GEYJ391	M.RESISTOR CH 1/10W 390	1	
R41168	ERJ6GEYJ562	M.RESISTOR CH 1/10W 5.6K	1	
R41169	ERJ6GEYJ222	M.RESISTOR CH 1/10W 2.2K	1	
R41170	ERJ6GEYJ331	M.RESISTOR CH 1/10W 330	1	
R41171	ERJ6GEYJ3R3	M.RESISTOR CH 1/10W 3.3	1	
R41172	ERJ6GEYJ122	M.RESISTOR CH 1/10W 1.2K	1	
R41173	ERJ6GEYJ222	M.RESISTOR CH 1/10W 2.2K	1	
R41174,75	ERJ6GEYG153	M.RESISTOR CH 1/10W 15K	2	
R41176	ERJ6GEYJ3R3	M.RESISTOR CH 1/10W 3.3	1	
R41177	ERJ6GEYJ122	M.RESISTOR CH 1/10W 1.2K	1	
R41178	ERJ6GEYJ222	M.RESISTOR CH 1/10W 2.2K	1	
R41179,80	ERJ6GEYJ270	M.RESISTOR CH 1/10W 27	2	
R41181,82	ERJ6GEYJ222	M.RESISTOR CH 1/10W 2.2K	2	
R41183	ERJ6GEYJ151	M.RESISTOR CH 1/10W 150	1	
R41184	ERJ6GEYJ103	M.RESISTOR CH 1/10W 10K	1	
R41185	ERJ6GEYJ182	M.RESISTOR CH 1/10W 1.8K	1	
R41186	ERJ6GEYJ822	M.RESISTOR CH 1/10W 8.2K	1	
R41187	ERJ6GEYJ151	M.RESISTOR CH 1/10W 150	1	
R41188	ERJ6GEYJ183	M.RESISTOR CH 1/10W 18K	1	
R41189	ERJ6GEYG472	M.RESISTOR CH 1/10W 4.7K	1	
R41190	ERJ6GEYJ103	M.RESISTOR CH 1/10W 10K	1	
R41191	ERJ6GEYJ152	M.RESISTOR CH 1/10W 1.5K	1	
R41192-94	ERJ6GEYJ103	M.RESISTOR CH 1/10W 10K	3	
R41195	ERJ6GEYJ182	M.RESISTOR CH 1/10W 1.8K	1	
R41196	ERJ6GEYJ822	M.RESISTOR CH 1/10W 8.2K	1	
R41197	ERJ6GEYJ183	M.RESISTOR CH 1/10W 18K	1	
R41198	ERJ6GEYG472	M.RESISTOR CH 1/10W 4.7K	1	
R41199	ERJ6GEYJ152	M.RESISTOR CH 1/10W 1.5K	1	
R41200-03	ERJ6GEYJ103	M.RESISTOR CH 1/10W 10K	4	
R41204	ERJ6GEYJ182	M.RESISTOR CH 1/10W 1.8K	1	
R41205	ERJ6GEYJ822	M.RESISTOR CH 1/10W 8.2K	1	
R41206	ERJ6GEYJ183	M.RESISTOR CH 1/10W 18K	1	
R41207	ERJ6GEYJ152	M.RESISTOR CH 1/10W 1.5K	1	
R41208	ERJ6GEYJ103	M.RESISTOR CH 1/10W 10K	1	
R41209	ERJ6GEYG472	M.RESISTOR CH 1/10W 4.7K	1	
R41210-12	ERJ6GEYJ103	M.RESISTOR CH 1/10W 10K	3	
R41213	ERJ6GEYJ182	M.RESISTOR CH 1/10W 1.8K	1	
R41214	ERJ6GEYJ822	M.RESISTOR CH 1/10W 8.2K	1	
R41215	ERJ6GEYJ183	M.RESISTOR CH 1/10W 18K	1	
R41216,17	ERJ6GEYJ103	M.RESISTOR CH 1/10W 10K	2	

Ref.No.	Part No.	Part Name & Description	Pcs	Remarks
R41218	ERJ6GEYG472	M.RESISTOR CH 1/10W 4.7K	1	
R41219	ERJ6GEYJ103	M.RESISTOR CH 1/10W 10K	1	
R41220	ERJ6GEYJ152	M.RESISTOR CH 1/10W 1.5K	1	
R41221	ERJ6GEYG222	M.RESISTOR CH 1/10W 2.2K	1	
R41222	ERJ6GEYG152	M.RESISTOR CH 1/10W 1.5K	1	
R41223	ERJ6GEYG222	M.RESISTOR CH 1/10W 2.2K	1	
R41224	ERJ6GEYG152	M.RESISTOR CH 1/10W 1.5K	1	
R41226	ERJ6GEYJ682	M.RESISTOR CH 1/10W 6.8K	1	
R41227-29	ERJ6GEYJ103	M.RESISTOR CH 1/10W 10K	3	
R41230	ERJ6GEYJ681	M.RESISTOR CH 1/10W 680	1	
R41231	ERJ6GEYJ273	M.RESISTOR CH 1/10W 27K	1	
R41232	ERJ6GEYJ104	M.RESISTOR CH 1/10W 100K	1	
R41233,34	ERJ6GEYJ103	M.RESISTOR CH 1/10W 10K	2	
R41235	ERJ6GEYJ563	M.RESISTOR CH 1/10W 56K	1	
R41236,37	ERJ6GEYJ103	M.RESISTOR CH 1/10W 10K	2	
R41252,53	ERJ6GEYJ273	M.RESISTOR CH 1/10W 27K	2	
R41254	ERJ6GEYJ821	M.RESISTOR CH 1/10W 820	1	
R41255	ERJ6GEYJ181	M.RESISTOR CH 1/10W 180	1	
R41256	ERJ6GEYJ102	M.RESISTOR CH 1/10W 1K	1	
R41257	ERJ6GEYJ152	M.RESISTOR CH 1/10W 1.5K	1	
R41258	ERJ6GEYJ103	M.RESISTOR CH 1/10W 10K	1	
R41259	ERJ6GEYJ223	M.RESISTOR CH 1/10W 22K	1	
R41260	ERJ6GEYJ821	M.RESISTOR CH 1/10W 820	1	
R41261	ERJ6GEYJ181	M.RESISTOR CH 1/10W 180	1	
R41262	ERJ6GEYJ102	M.RESISTOR CH 1/10W 1K	1	
R41263	ERJ6GEYJ152	M.RESISTOR CH 1/10W 1.5K	1	
R41264	ERJ6GEYJ103	M.RESISTOR CH 1/10W 10K	1	
R41265	ERJ6GEYJ223	M.RESISTOR CH 1/10W 22K	1	
SW41001	ESD145131	SWITCH	1	<R>
VC41001	ECV1ZW20X53T	V.CAPACITOR 20P	1	
VR41001	EVN32CA00B24	VARIABLE 20K	1	
VR41002	EVMF6SA00B14	V.RESISTOR 10K	1	
VR41003	EVN32CA00B23	V.RESISTOR 2K	1	
VR41004	EVN32CA00B15	V.RESISTOR 100K	1	
VR41005	EVN32CA00B24	VARIABLE 20K	1	
VR41006	EVMF6SA00B14	V.RESISTOR 10K	1	
VR41007	EVN32CA00B53	V.RESISTOR 5K	1	
VR41008,09	EVN32CA00B23	V.RESISTOR 2K	2	
VR41012,13	EVN32CA00B23	V.RESISTOR 2K	2	
VR41014	EVN32CA00B53	V.RESISTOR 5K	1	
VR41015,16	EVN32CA00B23	V.RESISTOR 2K	2	

Ref.No.	Part No.	Part Name & Description	Pcs	Remarks
	VEP04421D	P.C.BOARD W/COMPONENT		AG-8600E
		AUDIO (2)		
C41001	ECEA1CGE471	E.CAPACITOR 16V 470U	1	
C41003,04	ECEA1HGE3R3	E.CAPACITOR 50V 3.3U	2	
C41005	ECQB1H682JF	P.CAPACITOR 50V 6800P	1	
C41006	ECUM1H102JCN	C.CAPACITOR CH 50V 1000P	1	
C41007	ECQB1H223JF	P.CAPACITOR 50V 0.022U	1	
C41008	ECEA1HGE100	E.CAPACITOR 50V 10U	1	
C41009	ECEA1HGE4R7	E.CAPACITOR 50V 4.7U	1	
C41010	ECQB1H223JF	P.CAPACITOR 50V 0.022U	1	
C41011	ECEA1CGE470	E.CAPACITOR 16V 47U	1	
C41012	ECQB1H103JF	P.CAPACITOR 50V 0.01U	1	
C41013	ECQB1H332JF	P.CAPACITOR 50V 3300P	1	
C41014-16	ECUM1H102JCN	C.CAPACITOR CH 50V 1000P	3	
C41017	ECEA1HGE4R7	E.CAPACITOR 50V 4.7U	1	
C41018	ECUM1H104ZFN	C.CAPACITOR 50V 0.1U	1	
C41019	ECUM1H103ZFN	C.CAPACITOR 50V 0.01U	1	
C41020	ECEA1AGE101	E.CAPACITOR 10V 100U	1	
C41021,22	ECUM1H103ZFN	C.CAPACITOR 50V 0.01U	2	
C41023	ECEA1AGE101	E.CAPACITOR 10V 100U	1	
C41024	ECEA1CGE470	E.CAPACITOR 16V 47U	1	
C41025	ECQB1H104JF	P.CAPACITOR 50V 0.1U	1	
C41026	ECUM1H103ZFN	C.CAPACITOR 50V 0.01U	1	
C41027	ECUM1H102JCN	C.CAPACITOR CH 50V 1000P	1	
C41028	ECUM1H331JCN	C.CAPACITOR CH 50V 330P	1	
C41029	ECQB1H104JF	P.CAPACITOR 50V 0.1U	1	
C41030	ECEA1VGE330	E.CAPACITOR 50V 33U	1	
C41031	ECQV1H274JZ	P.CAPACITOR 50V 0.27U	1	
C41032,33	ECUM1H103ZFN	C.CAPACITOR 50V 0.01U	2	
C41034	ECEA1AGE101	E.CAPACITOR 10V 100U	1	
C41035,36	ECUM1H103ZFN	C.CAPACITOR 50V 0.01U	2	
C41038	ECUM1H101JCN	C.CAPACITOR CH 50V 100P	1	
C41039	ECUM1H103ZFN	C.CAPACITOR 50V 0.01U	1	
C41040	ECUM1H104ZFN	C.CAPACITOR 50V 0.1U	1	
C41041	ECEA1HGE4R7	E.CAPACITOR 50V 4.7U	1	
C41042-44	ECUM1H102JCN	C.CAPACITOR CH 50V 1000P	3	
C41045	ECQB1H332JF	P.CAPACITOR 50V 3300P	1	
C41046	ECQB1H103JF	P.CAPACITOR 50V 0.01U	1	
C41047	ECEA1CGE470	E.CAPACITOR 16V 47U	1	
C41048,49	ECQB1H223JF	P.CAPACITOR 50V 0.022U	2	
C41050	ECEA1HGE100	E.CAPACITOR 50V 10U	1	
C41051	ECUM1H102JCN	C.CAPACITOR CH 50V 1000P	1	
C41052	ECQB1H682JF	P.CAPACITOR 50V 6800P	1	
C41055,56	ECEA1HGE100	E.CAPACITOR 50V 10U	2	
C41057	ECEA1CGE470	E.CAPACITOR 16V 47U	1	
C41058	ECEA1HGE220	E.CAPACITOR 50V 22U	1	
C41059	ECEA1CGE470	E.CAPACITOR 16V 47U	1	
C41060	ECEA1AGE101	E.CAPACITOR 10V 100U	1	
C41061	ECUM1H103ZFN	C.CAPACITOR 50V 0.01U	1	
C41065,66	ECEA1CGE470	E.CAPACITOR 16V 47U	2	
C41067,68	ECEA1CN100S	E.CAPACITOR 16V 10U	2	
C41069,70	ECEA1HGE4R7	E.CAPACITOR 50V 4.7U	2	
C41072-74	ECEA1CGE470	E.CAPACITOR 16V 47U	3	
C41075	ECEA1AGE221	E.CAPACITOR 10V 220U	1	
C41077	ECEA0JGE101	E.CAPACITOR 6.3V 100U	1	
C41080	ECEA1CGE470	E.CAPACITOR 16V 47U	1	
C41082	ECEA1CGE221	E.CAPACITOR 16V 220U	1	
C41084	ECEA1CGE470	E.CAPACITOR 16V 47U	1	
C41085	ECQB1H472JF	P.CAPACITOR 50V 4700P	1	
C41086,87	ECEA1HGE100	E.CAPACITOR 50V 10U	2	
C41088	ECEA1CGE470	E.CAPACITOR 16V 47U	1	
C41089	ECEA1HGE100	E.CAPACITOR 50V 10U	1	
C41090	ECEA1CGE470	E.CAPACITOR 16V 47U	1	
C41091	ECUM1H101JCN	C.CAPACITOR CH 50V 100P	1	
C41092	ECEA1CGE470	E.CAPACITOR 16V 47U	1	
C41093	ECEA1HGE100	E.CAPACITOR 50V 10U	1	
C41094,95	ECEA1CGE470	E.CAPACITOR 16V 47U	2	
C41116	ECEA1CGE101	E.CAPACITOR 16V 100U	1	
C41117	ECEA1CGE470	E.CAPACITOR 16V 47U	1	
C41118	ECEA1CGE101	E.CAPACITOR 16V 100U	1	
C41119	ECEA1CGE471	E.CAPACITOR 16V 470U	1	
C41121	ECEA1HGE4R7	E.CAPACITOR 50V 4.7U	1	
C41122	ECEA1CGE470	E.CAPACITOR 16V 47U	1	
C41123	ECEA1HGE220	E.CAPACITOR 50V 22U	1	
C41124	ECEA1CGE101	E.CAPACITOR 16V 100U	1	
C41130	ECUM1H103ZFN	C.CAPACITOR 50V 0.01U	1	
D41001,02	1SS133	DIODE	2	<R>
D41007,08	MA4068M	DIODE	2	<R>
D41009	MA151K	DIODE	1	<R>
D41010	MA157	DIODE	1	<R>
D41012,13	MA3030	DIODE	2	<R>
D41014	MA3068	DIODE	1	<R>
D41015,16	MA151K	DIODE	2	<R>
D41017	MA153	DIODE	1	<R>
FL41001	VLF0697	FILTER	1	
IC41001	BA7705K1	IC	1	<R>
IC41002	AN78N05	IC	1	<R>
IC41003	AN3912	IC	1	<R>
IC41004	UPC4558G2	IC	1	<R>
IC41005	UPC393G2	IC	1	<R>
IC41006	MC14053BF	IC	1	<R>
IC41007	UPC4558G2	IC	1	<R>
IC41008	NJM2068MD	IC	1	<R>
IC41010-12	MC14053BF	IC	3	<R>
IC41013	UPC4558G2	IC	1	<R>
IC41014	MC14053BF	IC	1	<R>
IC41015	UPC4556G2	IC	1	<R>
IC41016,17	AN6558S	IC	2	<R>
L41001-03	VLQEL05S101J	COIL 100UH	3	
L41004-08	VLQEL06F102K	COIL 1000UH	5	
P41001	VJP3078	CONNECTOR (MALE)	1	
P41003	VJP3176B064	CONNECTOR (MALE) 64P	1	
Q41002,03	2SD1306	TRANSISTOR	2	<R>
Q41006	MSD601-R	TRANSISTOR	1	<R>
Q41008	2SD1306	TRANSISTOR	1	<R>
Q41009	2SD638	TRANSISTOR	1	<R>
Q41010	2SB643	TRANSISTOR	1	<R>
Q41012-14	MSD601-R	TRANSISTOR	3	<R>
Q41015	2SD1328-R	TRANSISTOR	1	<R>
Q41016	2SD602A	TRANSISTOR	1	<R>
Q41017,18	2SD1306	TRANSISTOR	2	<R>
Q41036	2SB710	TRANSISTOR	1	<R>
Q41037	2SD1306	TRANSISTOR	1	<R>
Q41038,39	2SD1328-R	TRANSISTOR	2	<R>
Q41040	2SD1306	TRANSISTOR	1	<R>
Q41041,42	2SD1328-R	TRANSISTOR	2	<R>
Q41043	2SD1306	TRANSISTOR	1	<R>
Q41044,45	2SD1328-R	TRANSISTOR	2	<R>
Q41046	2SD1306	TRANSISTOR	1	<R>
Q41047,48	2SD1328-R	TRANSISTOR	2	<R>
Q41049	2SD601	TRANSISTOR	1	<R>
Q41051,52	2SD1306	TRANSISTOR	2	<R>
Q41053	2SB709A-R	TRANSISTOR	1	<R>
Q41110,11	2SC1740SX	TRANSISTOR	2	<R>
QR41002,03	MRN2403	TRANSISTOR	2	<R>
QR41004	MRN1403	TRANSISTOR	1	<R>
QR41006,07	MRN1404	TRANSISTOR	2	<R>
QR41012	MRN1402	TRANSISTOR	1	<R>

Ref.No.		Part No.	Part Name & Description	Pcs	Remarks
R41003,04		ERJ6GEYJ102	M.RESISTOR CH 1/10W 1K	2	
R41005,06		ERJ6GEYJ473	M.RESISTOR CH 1/10W 47K	2	
R41007		ERJ6GEYJ225	M.RESISTOR CH 1/10W 2.2M	1	
R41008,09		ERJ6GEYJ331	M.RESISTOR CH 1/10W 330	2	
R41010,11		ERJ6GEYG821	M.RESISTOR CH 1/10W 820	2	
R41012		ERJ6GEYG681	M.RESISTOR CH 1/10W 680	1	
R41013		VRE0034E112	M.RESISTOR CH 1/10W 1.1K	1	
R41014		VRE0034E103	M.RESISTOR CH 1/10W 10K	1	
R41015		ERJ6GEYG183	M.RESISTOR CH 1/10W 18K	1	
R41016		ERJ6GEYG562	M.RESISTOR CH 1/10W 5.6K	1	
R41017		ERJ6GEYG104	M.RESISTOR CH 1/10W 100K	1	
R41018		ERJ6GEYG303	M.RESISTOR CH 1/10W 30K	1	
R41019		ERJ6GEYJ123	M.RESISTOR CH 1/10W 12K	1	
R41020		ERJ6GEYJ102	M.RESISTOR CH 1/10W 1K	1	
R41021		VRE0034E393	M.RESISTOR CH 1/10W 39K	1	
R41022		ERJ6GEYJ102	M.RESISTOR CH 1/10W 1K	1	
R41023,24		VRE0034E223	M.RESISTOR CH 1/10W 22K	2	
R41025		ERJ6GEYG163	M.RESISTOR CH 1/10W 16K	1	
R41026		ERJ6GEYJ105	M.RESISTOR CH 1/10W 1M	1	
R41027		ERJ6GEYJ102	M.RESISTOR CH 1/10W 1K	1	
R41028,29		ERJ6GEYJ473	M.RESISTOR CH 1/10W 47K	2	
R41030		ERJ6GEYJ102	M.RESISTOR CH 1/10W 1K	1	
R41031		ERJ6GEYJ823	M.RESISTOR CH 1/10W 82K	1	
R41032		ERJ6GEYJ182	M.RESISTOR CH 1/10W 1.8K	1	
R41033,34		ERJ6GEYJ152	M.RESISTOR CH 1/10W 1.5K	2	
R41035		ERJ6GEYJ182	M.RESISTOR CH 1/10W 1.8K	1	
R41038		ERJ6GEYJ181	M.RESISTOR CH 1/10W 180	1	
R41039		ERJ6GEYG103	M.RESISTOR CH 1/10W 10K	1	
R41040		ERJ6GEYG303	M.RESISTOR CH 1/10W 30K	1	
R41041		ERJ6GEYG104	M.RESISTOR CH 1/10W 100K	1	
R41042		ERJ6GEYG562	M.RESISTOR CH 1/10W 5.6K	1	
R41043		ERJ6GEYG183	M.RESISTOR CH 1/10W 18K	1	
R41044		VRE0034E103	M.RESISTOR CH 1/10W 10K	1	
R41045		VRE0034E112	M.RESISTOR CH 1/10W 1.1K	1	
R41046		ERJ6GEYG681	M.RESISTOR CH 1/10W 680	1	
R41047,48		ERJ6GEYG821	M.RESISTOR CH 1/10W 820	2	
R41049		ERJ6GEYJ104	M.RESISTOR CH 1/10W 100K	1	
R41050		ERJ6GEYJ182	M.RESISTOR CH 1/10W 1.8K	1	
R41051		ERJ6GEYJ821	M.RESISTOR CH 1/10W 820	1	
R41062		ERJ6GEYJ392	M.RESISTOR CH 1/10W 3.9K	1	
R41063		ERJ6GEYJ332	M.RESISTOR CH 1/10W 3.3K	1	
R41064		ERJ6GEYJ392	M.RESISTOR CH 1/10W 3.9K	1	
R41065		ERJ6GEYJ332	M.RESISTOR CH 1/10W 3.3K	1	
R41066-71		ERJ6GEYJ103	M.RESISTOR CH 1/10W 10K	6	
R41072,73		ERJ6GEYJ561	M.RESISTOR CH 1/10W 560	2	
R41074		ERJ6GEYJ103	M.RESISTOR CH 1/10W 10K	1	
R41075,76		ERJ6GEYJ331	M.RESISTOR CH 1/10W 330	2	
R41077		ERJ6GEYJ102	M.RESISTOR CH 1/10W 1K	1	
R41078		ERJ6GEYJ103	M.RESISTOR CH 1/10W 10K	1	
R41082		ERJ6GEYJ102	M.RESISTOR CH 1/10W 1K	1	
R41091		ERJ6GEYJ102	M.RESISTOR CH 1/10W 1K	1	
R41097		ERJ6GEYJ680	M.RESISTOR CH 1/10W 68	1	
R41098		ERJ6GEYJ104	M.RESISTOR CH 1/10W 100K	1	
R41099		ERJ6GEYJ102	M.RESISTOR CH 1/10W 1K	1	
R41100		VRE0034E302	M.RESISTOR CH 1/10W 3K	1	
R41101		ERJ6GEYJ562	M.RESISTOR CH 1/10W 5.6K	1	
R41102		ERJ6GEYJ103	M.RESISTOR CH 1/10W 10K	1	
R41103		ERJ6GEYJ473	M.RESISTOR CH 1/10W 47K	1	
R41104		ERJ6GEYJ102	M.RESISTOR CH 1/10W 1K	1	
R41105,06		ERJ6GEYJ103	M.RESISTOR CH 1/10W 10K	2	
R41107,08		ERJ6GEYJ104	M.RESISTOR CH 1/10W 100K	2	
R41109-11		ERJ6GEYJ103	M.RESISTOR CH 1/10W 10K	3	
R41112		ERJ6GEYJ222	M.RESISTOR CH 1/10W 2.2K	1	
R41113		ERJ6GEYJ334	M.RESISTOR CH 1/10W 330K	1	
R41115		ERJ6GEYJ103	M.RESISTOR CH 1/10W 10K	1	
R41116		ERJ6GEYJ221	M.RESISTOR CH 1/10W 220	1	
R41117		ERJ6GEYJ223	M.RESISTOR CH 1/10W 22K	1	
R41118		ERJ6GEYJ102	M.RESISTOR CH 1/10W 1K	1	
R41119		ERJ6GEYJ103	M.RESISTOR CH 1/10W 10K	1	
R41120		ERJ6GEY0R00	M.RESISTOR CH 1/10W 0	1	
R41121		ERJ6GEYJ103	M.RESISTOR CH 1/10W 10K	1	
R41122		ERJ6GEYJ391	M.RESISTOR CH 1/10W 390	1	
R41123		ERJ6GEYG472	M.RESISTOR CH 1/10W 4.7K	1	
R41124		ERJ6GEYJ123	M.RESISTOR CH 1/10W 12K	1	

Ref.No.		Part No.	Part Name & Description	Pcs	Remarks
R41125		ERJ6GEYG472	M.RESISTOR CH 1/10W 4.7K	1	
R41126		ERJ6GEYJ123	M.RESISTOR CH 1/10W 12K	1	
R41127,28		ERJ6GEYJ470	M.RESISTOR CH 1/10W 47	2	
R41129		ERJ6GEYJ561	M.RESISTOR CH 1/10W 560	1	
R41130		ERJ6GEYJ102	M.RESISTOR CH 1/10W 1K	1	
R41131		ERJ6GEYJ103	M.RESISTOR CH 1/10W 10K	1	
R41132,33		ERJ6GEYJ470	M.RESISTOR CH 1/10W 47	2	
R41134		ERJ6GEYJ561	M.RESISTOR CH 1/10W 560	1	
R41135		ERJ6GEYJ102	M.RESISTOR CH 1/10W 1K	1	
R41136		ERJ6GEYJ103	M.RESISTOR CH 1/10W 10K	1	
R41149		ERJ6GEYJ103	M.RESISTOR CH 1/10W 10K	1	
R41183		ERJ6GEYJ151	M.RESISTOR CH 1/10W 150	1	
R41184		ERJ6GEYJ103	M.RESISTOR CH 1/10W 10K	1	
R41185		ERJ6GEYJ182	M.RESISTOR CH 1/10W 1.8K	1	
R41186		ERJ6GEYJ822	M.RESISTOR CH 1/10W 8.2K	1	
R41187		ERJ6GEYJ151	M.RESISTOR CH 1/10W 150	1	
R41188		ERJ6GEYJ183	M.RESISTOR CH 1/10W 18K	1	
R41189		ERJ6GEYG472	M.RESISTOR CH 1/10W 4.7K	1	
R41190		ERJ6GEYJ103	M.RESISTOR CH 1/10W 10K	1	
R41191		ERJ6GEYJ152	M.RESISTOR CH 1/10W 1.5K	1	
R41192-94		ERJ6GEYJ103	M.RESISTOR CH 1/10W 10K	3	
R41195		ERJ6GEYJ182	M.RESISTOR CH 1/10W 1.8K	1	
R41196		ERJ6GEYJ822	M.RESISTOR CH 1/10W 8.2K	1	
R41197		ERJ6GEYJ183	M.RESISTOR CH 1/10W 18K	1	
R41198		ERJ6GEYG472	M.RESISTOR CH 1/10W 4.7K	1	
R41199		ERJ6GEYJ152	M.RESISTOR CH 1/10W 1.5K	1	
R41200-03		ERJ6GEYJ103	M.RESISTOR CH 1/10W 10K	4	
R41204		ERJ6GEYJ182	M.RESISTOR CH 1/10W 1.8K	1	
R41205		ERJ6GEYJ822	M.RESISTOR CH 1/10W 8.2K	1	
R41206		ERJ6GEYJ183	M.RESISTOR CH 1/10W 18K	1	
R41207		ERJ6GEYJ152	M.RESISTOR CH 1/10W 1.5K	1	
R41208		ERJ6GEYJ103	M.RESISTOR CH 1/10W 10K	1	
R41209		ERJ6GEYG472	M.RESISTOR CH 1/10W 4.7K	1	
R41210-12		ERJ6GEYJ103	M.RESISTOR CH 1/10W 10K	3	
R41213		ERJ6GEYJ182	M.RESISTOR CH 1/10W 1.8K	1	
R41214		ERJ6GEYJ822	M.RESISTOR CH 1/10W 8.2K	1	
R41215		ERJ6GEYJ183	M.RESISTOR CH 1/10W 18K	1	
R41216,17		ERJ6GEYJ103	M.RESISTOR CH 1/10W 10K	2	
R41218		ERJ6GEYG472	M.RESISTOR CH 1/10W 4.7K	1	
R41219		ERJ6GEYJ103	M.RESISTOR CH 1/10W 10K	1	
R41220		ERJ6GEYJ152	M.RESISTOR CH 1/10W 1.5K	1	
R41228,29		ERJ6GEYJ103	M.RESISTOR CH 1/10W 10K	2	
R41230		ERJ6GEYJ681	M.RESISTOR CH 1/10W 680	1	
R41231		ERJ6GEYJ273	M.RESISTOR CH 1/10W 27K	1	
R41232		ERJ6GEYJ104	M.RESISTOR CH 1/10W 100K	1	
R41233,34		ERJ6GEYJ103	M.RESISTOR CH 1/10W 10K	2	
R41235		ERJ6GEYJ563	M.RESISTOR CH 1/10W 56K	1	
R41236,37		ERJ6GEYJ103	M.RESISTOR CH 1/10W 10K	2	
R41250,51		ERJ6GEY0R00	M.RESISTOR CH 1/10W 0	2	
R41254		ERJ6GEYJ821	M.RESISTOR CH 1/10W 820	1	
R41255		ERJ6GEYJ181	M.RESISTOR CH 1/10W 180	1	
R41256		ERJ6GEYJ102	M.RESISTOR CH 1/10W 1K	1	
R41257		ERJ6GEYJ152	M.RESISTOR CH 1/10W 1.5K	1	
R41258		ERJ6GEYJ103	M.RESISTOR CH 1/10W 10K	1	
R41259		ERJ6GEYJ223	M.RESISTOR CH 1/10W 22K	1	
R41260		ERJ6GEYJ821	M.RESISTOR CH 1/10W 820	1	
R41261		ERJ6GEYJ181	M.RESISTOR CH 1/10W 180	1	
R41262		ERJ6GEYJ102	M.RESISTOR CH 1/10W 1K	1	
R41263		ERJ6GEYJ152	M.RESISTOR CH 1/10W 1.5K	1	
R41264		ERJ6GEYJ103	M.RESISTOR CH 1/10W 10K	1	
R41265		ERJ6GEYJ223	M.RESISTOR CH 1/10W 22K	1	
SW41001		ESD145131	SWITCH	1	<R>
VR41001		EVN32CA00B24	VARIABLE 20K	1	
VR41002		EVMF6SA00B14	V.RESISTOR 10K	1	
VR41004		EVN32CA00B15	V.RESISTOR 100K	1	
VR41005		EVN32CA00B24	VARIABLE 20K	1	
VR41006		EVMF6SA00B14	V.RESISTOR 10K	1	
VR41012,13		EVN32CA00B23	V.RESISTOR 2K	2	
VR41014		EVN32CA00B53	V.RESISTOR 5K	1	

Ref.No.	Part No.	Part Name & Description	Pcs	Remarks
	VEP05162N	P.C.BOARD W/COMPONENT		AG-8700E
		HEAD AMP		
C5001	ECUM1H102KBN	C.CAPACITOR CH 50V 1000P	1	
C5002,03	ECUM1H103ZFN	C.CAPACITOR 50V 0.01U	2	
C5004	ECEA1HKA0R1	E.CAPACITOR 50V 0.1U	1	
C5005	ECUM1H102KBN	C.CAPACITOR CH 50V 1000P	1	
C5006-08	ECUM1H103ZFN	C.CAPACITOR 50V 0.01U	3	
C5009	ECUM1H182JN	C.CAPACITOR CH 50V 1800P	1	
C5010	ECUM1E104ZFN	C.CAPACITOR CH 25V 0.1U	1	
C5011	ECEA1CKA220	E.CAPACITOR 16V 22U	1	
C5012	ECUM1H473ZFN	C.CAPACITOR CH 50V 0.047U	1	
C5013	ECUM1H102KBN	C.CAPACITOR CH 50V 1000P	1	
C5014	ECEA0JKA470	E.CAPACITOR 6.3V 47U	1	
C5015	ECUM1E104ZFN	C.CAPACITOR CH 25V 0.1U	1	
C5016	ECEA1EKA4R7	E.CAPACITOR 25V 4.7U	1	
C5017	ECUM1H120JCN	C.CAPACITOR CH 50V 12P	1	
C5018,19	ECUM1E224ZFN	C.CAPACITOR CH 25V 0.22U	2	
C5020	ECEA1EKA4R7	E.CAPACITOR 25V 4.7U	1	
C5021	ECUM1H120JCN	C.CAPACITOR CH 50V 12P	1	
C5022	ECEA1EKA4R7	E.CAPACITOR 25V 4.7U	1	
C5023	ECUM1H030CCN	C.CAPACITOR CH 50V 3P	1	
C5024,25	ECUM1E104ZFN	C.CAPACITOR CH 25V 0.1U	2	
C5026	ECUM1H030CCN	C.CAPACITOR CH 50V 3P	1	
C5027	ECEA1EKA4R7	E.CAPACITOR 25V 4.7U	1	
C5028	ECUM1E104ZFN	C.CAPACITOR CH 25V 0.1U	1	
C5029	ECUM1H102KBN	C.CAPACITOR CH 50V 1000P	1	
C5030	ECUM1H103ZFN	C.CAPACITOR 50V 0.01U	1	
C5031	ECUM1H104ZFN	C.CAPACITOR 50V 0.1U	1	
C5032,33	ECUM1E104ZFN	C.CAPACITOR CH 25V 0.1U	2	
C5034	ECUM1H102KBN	C.CAPACITOR CH 50V 1000P	1	
C5035	ECEA0JKA470	E.CAPACITOR 6.3V 47U	1	
C5036	ECUM1H103ZFN	C.CAPACITOR 50V 0.01U	1	
C5037,38	ECUM1H103KBN	C.CAPACITOR CH 50V 0.01U	2	
C5039,40	ECUM1H103ZFN	C.CAPACITOR 50V 0.01U	2	
C5042	ECEA1HKA010	E.CAPACITOR 50V 1U	1	
C5043	ECUM1H471JCN	C.CAPACITOR CH 50V 470P	1	
C5044,45	ECUM1H101JCN	C.CAPACITOR CH 50V 100P	2	
C5046	ECUM1H471JCN	C.CAPACITOR CH 50V 470P	1	
C5047	ECEA1HKA010	E.CAPACITOR 50V 1U	1	
C5048	ECUM1H472ZFN	C.CAPACITOR CH 50V 4700P	1	
C5056	ECUM1H103ZFN	C.CAPACITOR 50V 0.01U	1	
C5066	ECUM1E224ZFN	C.CAPACITOR CH 25V 0.22U	1	
D5001,02	MA151K	DIODE	2	<R>
D5004	MA151K	DIODE	1	<R>
IC5001	AN3334K	IC	1	<R>
IC5002	BA7740FS	IC	1	<R>
L5001-04	VLQ0460	COIL	4	
P5001	VJP3091	CONNECTOR (MALE)	1	
P5002	VJS2603	CONNECTOR (FEMALE)	1	
P5003	VJP3091	CONNECTOR (MALE)	1	
Q5001	MSB709-R	TRANSISTOR	1	<R>
Q5002	MSC2295-B	TRANSISTOR	1	<R>
Q5003	XN4504	TRANSISTOR-TRANSISTOR	1	<R>
Q5004,05	MSC2295-B	TRANSISTOR	2	<R>

Ref.No.	Part No.	Part Name & Description	Pcs	Remarks
QR5001	MRN1404	TRANSISTOR	1	<R>
R5001	ERJ6GEYG472	M.RESISTOR CH 1/10W 4.7K	1	
R5002	ERJ6GEYJ684	M.RESISTOR CH 1/10W 680K	1	
R5003	ERJ6GEYJ223	M.RESISTOR CH 1/10W 22K	1	
R5004	ERJ6GEYJ101	M.RESISTOR CH 1/10W 100	1	
R5005	ERJ6GEYJ102	M.RESISTOR CH 1/10W 1K	1	
R5006	ERJ6GEYJ152	M.RESISTOR CH 1/10W 1.5K	1	
R5007	ERJ6GEYJ122	M.RESISTOR CH 1/10W 1.2K	1	
R5008	ERJ6GEYJ222	M.RESISTOR CH 1/10W 2.2K	1	
R5009	ERJ6GEYJ471	M.RESISTOR CH 1/10W 470	1	
R5010	ERJ6GEYK1R0	M.RESISTOR CH 1/16W 1.0	1	
R5011-14	ERJ6GEYJ122	M.RESISTOR CH 1/10W 1.2K	4	
R5015-18	ERJ6GEYJ100	M.RESISTOR CH 1/10W 10	4	
R5019	ERJ6GEYJ391	M.RESISTOR CH 1/10W 390	1	
R5020,21	ERJ6GEYJ332	M.RESISTOR CH 1/10W 3.3K	2	
R5022	ERJ6GEYJ152	M.RESISTOR CH 1/10W 1.5K	1	
R5026	ERJ6GEY0R00	M.RESISTOR CH 1/10W 0	1	
R5027	ERJ6GEYG333	M.RESISTOR CH 1/10W 33K	1	
R5028	ERJ6GEYG243	M.RESISTOR CH 1/10W 24K	1	
R5029	ERJ6GEYG273	M.RESISTOR CH 1/10W 27K	1	
R5030	ERJ6GEYJ391	M.RESISTOR CH 1/10W 390	1	
R5031	ERJ6GEYJ103	M.RESISTOR CH 1/10W 10K	1	
R5032	ERJ6GEYJ473	M.RESISTOR CH 1/10W 47K	1	
R5033	ERJ6GEYJ273	M.RESISTOR CH 1/10W 27K	1	
R5034	ERJ6GEYG153	M.RESISTOR CH 1/10W 15K	1	
R5036	ERJ6GEYJ332	M.RESISTOR CH 1/10W 3.3K	1	
R5037,38	ERJ6GEYJ152	M.RESISTOR CH 1/10W 1.5K	2	
R5039	ERJ6GEYJ332	M.RESISTOR CH 1/10W 3.3K	1	
R5040	ERDS2TJ221	C.RESISTOR 1/4W 220	1	
R5041-43	ERJ6GEYJ100	M.RESISTOR CH 1/10W 10	3	
R5044,45	ERJ6GEYJ103	M.RESISTOR CH 1/10W 10K	2	
R5046,47	ERJ6GEY0R00	M.RESISTOR CH 1/10W 0	2	
R5058	ERJ6GEY0R00	M.RESISTOR CH 1/10W 0	1	
R5059	ERJ6GEYJ473	M.RESISTOR CH 1/10W 47K	1	
R5061	ERJ6GEY0R00	M.RESISTOR CH 1/10W 0	1	
R5062	ERDS2TJ221	C.RESISTOR 1/4W 220	1	
R5070	ERJ6GEY0R00	M.RESISTOR CH 1/10W 0	1	
VR5001,02	EVN32CA00B23	V.RESISTOR 2K	2	
		MISCELLANEOUS		
E64	VSC3119	SHIELD COVER (MIDDLE)	1	
E65	VSC3039	SHIELD COVER (FRONT)	1	
E66	VSC3040	SHIELD COVER (REAR)	1	

Ref.No.		Part No.	Part Name & Description	Pcs	Remarks
		VEP05162P	P.C.BOARD W/COMPONENT		AG-8600E
			HEAD AMP		
C5001		ECUM1H102KBN	C.CAPACITOR CH 50V 1000P	1	
C5002,03		ECUM1H103ZFN	C.CAPACITOR 50V 0.01U	2	
C5004		ECEA1HKA0R1	E.CAPACITOR 50V 0.1U	1	
C5005		ECUM1H102KBN	C.CAPACITOR CH 50V 1000P	1	
C5006		ECUM1H103ZFN	C.CAPACITOR 50V 0.01U	1	
C5010		ECUM1E104ZFN	C.CAPACITOR CH 25V 0.1U	1	
C5013		ECUM1H102KBN	C.CAPACITOR CH 50V 1000P	1	
C5014		ECEA0JKA470	E.CAPACITOR 6.3V 47U	1	
C5015		ECUM1E104ZFN	C.CAPACITOR CH 25V 0.1U	1	
C5016		ECEA1EKA4R7	E.CAPACITOR 25V 4.7U	1	
C5017		ECUM1H120JCN	C.CAPACITOR CH 50V 12P	1	
C5018,19		ECUM1E224ZFN	C.CAPACITOR CH 25V 0.22U	2	
C5020		ECEA1EKA4R7	E.CAPACITOR 25V 4.7U	1	
C5021		ECUM1H120JCN	C.CAPACITOR CH 50V 12P	1	
C5022		ECEA1EKA4R7	E.CAPACITOR 25V 4.7U	1	
C5023		ECUM1H030CCN	C.CAPACITOR CH 50V 3P	1	
C5024,25		ECUM1E104ZFN	C.CAPACITOR CH 25V 0.1U	2	
C5026		ECUM1H030CCN	C.CAPACITOR CH 50V 3P	1	
C5027		ECEA1EKA4R7	E.CAPACITOR 25V 4.7U	1	
C5028		ECUM1E104ZFN	C.CAPACITOR CH 25V 0.1U	1	
C5029		ECUM1H102KBN	C.CAPACITOR CH 50V 1000P	1	
C5032,33		ECUM1E104ZFN	C.CAPACITOR CH 25V 0.1U	2	
C5034		ECUM1H102KBN	C.CAPACITOR CH 50V 1000P	1	
C5035		ECEA0JKA470	E.CAPACITOR 6.3V 47U	1	
C5036		ECUM1H103ZFN	C.CAPACITOR 50V 0.01U	1	
C5037		ECUM1H103KBN	C.CAPACITOR CH 50V 0.01U	1	
C5039		ECUM1H103ZFN	C.CAPACITOR 50V 0.01U	1	
C5042		ECEA1HKA010	E.CAPACITOR 50V 1U	1	
C5043		ECUM1H471JCN	C.CAPACITOR CH 50V 470P	1	
C5044,45		ECUM1H101JCN	C.CAPACITOR CH 50V 100P	2	
C5046		ECUM1H471JCN	C.CAPACITOR CH 50V 470P	1	
C5047		ECEA1HKA010	E.CAPACITOR 50V 1U	1	
C5048		ECUM1H472ZFN	C.CAPACITOR CH 50V 4700P	1	
C5066		ECUM1E224ZFN	C.CAPACITOR CH 25V 0.22U	1	
D5001,02		MA151K	DIODE	2	<R>
IC5001		AN3334K	IC	1	<R>
IC5002		BA7740FS	IC	1	<R>
L5001		VLQ0460	COIL	1	
L5003		VLQ0460	COIL	1	
P5001		VJP3091	CONNECTOR (MALE)	1	
P5002		VJS2603	CONNECTOR (FEMALE)	1	
P5003		VJP3091	CONNECTOR (MALE)	1	
Q5001		MSB709-R	TRANSISTOR	1	<R>
Q5003		XN4504	TRANSISTOR-TRANSISTOR	1	<R>
Q5005		MSC2295-B	TRANSISTOR	1	<R>
QR5001		MRN1404	TRANSISTOR	1	<R>
R5001		ERJ6GEYG472	M.RESISTOR CH 1/10W 4.7K	1	
R5002		ERJ6GEYJ684	M.RESISTOR CH 1/10W 680K	1	

Ref.No.		Part No.	Part Name & Description	Pcs	Remarks
R5003		ERJ6GEYJ223	M.RESISTOR CH 1/10W 22K	1	
R5004		ERJ6GEYJ101	M.RESISTOR CH 1/10W 100	1	
R5005		ERJ6GEYJ102	M.RESISTOR CH 1/10W 1K	1	
R5006		ERJ6GEYJ152	M.RESISTOR CH 1/10W 1.5K	1	
R5007		ERJ6GEYJ122	M.RESISTOR CH 1/10W 1.2K	1	
R5010		ERJ6GEYK1R0	M.RESISTOR CH 1/16W 1.0	1	
R5011-14		ERJ6GEYJ122	M.RESISTOR CH 1/10W 1.2K	4	
R5015-18		ERJ6GEYJ100	M.RESISTOR CH 1/10W 10	4	
R5019		ERJ6GEYJ391	M.RESISTOR CH 1/10W 390	1	
R5022		ERJ6GEYJ152	M.RESISTOR CH 1/10W 1.5K	1	
R5026		ERJ6GEY0R00	M.RESISTOR CH 1/10W 0	1	
R5027		ERJ6GEYG333	M.RESISTOR CH 1/10W 33K	1	
R5028		ERJ6GEYG243	M.RESISTOR CH 1/10W 24K	1	
R5029		ERJ6GEYG273	M.RESISTOR CH 1/10W 27K	1	
R5030		ERJ6GEYJ391	M.RESISTOR CH 1/10W 390	1	
R5031		ERJ6GEYJ103	M.RESISTOR CH 1/10W 10K	1	
R5032		ERJ6GEYJ473	M.RESISTOR CH 1/10W 47K	1	
R5034		ERJ6GEYG153	M.RESISTOR CH 1/10W 15K	1	
R5036		ERJ6GEYJ332	M.RESISTOR CH 1/10W 3.3K	1	
R5037,38		ERJ6GEYJ152	M.RESISTOR CH 1/10W 1.5K	2	
R5039		ERJ6GEYJ332	M.RESISTOR CH 1/10W 3.3K	1	
R5041		ERJ6GEYJ180	M.RESISTOR CH 1/10W 18	1	
R5042,43		ERJ6GEYJ100	M.RESISTOR CH 1/10W 10	2	
R5044,45		ERJ6GEYJ103	M.RESISTOR CH 1/10W 10K	2	
R5046,47		ERJ6GEY0R00	M.RESISTOR CH 1/10W 0	2	
R5059		ERJ6GEYJ473	M.RESISTOR CH 1/10W 47K	1	
			MISCELLANEOUS		
E64		VSC3119	SHIELD COVER (MIDDLE)	1	
E65		VSC3039	SHIELD COVER (FRONT)	1	
E66		VSC3040	SHIELD COVER (REAR)	1	

Ref.No.		Part No.	Part Name & Description	Pcs	Remarks
		VEP06902H	P.C.BOARD W/COMPONENT		AG-8700E
			FRONT		
		VEP06929A	P.C.BOARD W/COMPONENT		
			FRONT LED		ON VEP06902H
		VEP06962A	P.C.BOARD W/COMPONENT		
			KEY BOARD		ON VEP06902H
C62002		ECEA1CKS470	E.CAPACITOR 16V 47U	1	
C62003		ECEA1AKS221	E.CAPACITOR 10V 220U	1	
C62004,05		ECEA1HKS220	E.CAPACITOR 50V 22U	2	
C62007		ECUM1H102KBN	C.CAPACITOR CH 50V 1000P	1	
C62008-10		ECUM1H101JCN	C.CAPACITOR CH 50V 100P	3	
C62011		ECEA1CKS330	E.CAPACITOR 16V 33U	1	
C62012		ECUM1H101JCN	C.CAPACITOR CH 50V 100P	1	
C62013		ECEA1AKS221	E.CAPACITOR 10V 220U	1	
C62014		ECUM1H103ZFN	C.CAPACITOR 50V 0.01U	1	
C62015,16		ECUM1H220JCN	C.CAPACITOR CH 50V 22P	2	
D62002		MA4056-M	DIODE	1	<R>
D62013-16		MA151K	DIODE	4	<R>
D62018-22		MA151K	DIODE	5	<R>
D62023-28		MA153	DIODE	6	<R>
D62029-31		MA152K	DIODE	3	<R>
D62032-35		MA151K	DIODE	4	<R>
D62036		MA701A	DIODE	1	<R>
D62047		MA152K	DIODE	1	<R>
D62048		MA151K	DIODE	1	<R>
D62050		MA151K	DIODE	1	<R>
D62701-09		MA165VT	DIODE	9	<R>
DP62001		VSL0312	DIODE	1	
IC62001		UPD75236J025	IC	1	<R>
IC62002		UPC393G2	IC	1	<R>
IC62003		MN1382-R	IC	1	
J62002		ERJ6GEY0R00	M.RESISTOR CH 1/10W 0	1	
J62004,05		ERJ6GEY0R00	M.RESISTOR CH 1/10W 0	2	
J62007		ERJ6GEY0R00	M.RESISTOR CH 1/10W 0	1	
L62001		VLQEL05K121K	COIL	1	
LD62010,11		LN31GCPHLG4	COIL	2	
P62001-04		VJP3503	CONNECTOR	4	
P62005		VJP1236T	CONNECTOR (MALE) 9P	1	
P62006		VJS2949B010	CONNECTOR (FEMALE) 10P	1	
P62007		VJP3076	CONNECTOR	1	
P62008		VJP3093	CONNECTOR (MALE)	1	
P62009		VJS2889A018	CONNECTOR	1	
P62501		VJS2949B010	CONNECTOR (FEMALE) 10P	1	
P62701		VJS2949B018	CONNECTOR	1	
Q62002-05		MSD601-R	TRANSISTOR	4	<R>
Q62006-09		MSB710-R	TRANSISTOR	4	<R>

Ref.No.		Part No.	Part Name & Description	Pcs	Remarks
QR62001		MRN1404	TRANSISTOR	1	<R>
R62001		ERJ6GEYJ103	M.RESISTOR CH 1/10W 10K	1	
R62003		ERJ6GEYJ104	M.RESISTOR CH 1/10W 100K	1	
R62004-11		ERJ6GEYJ473	M.RESISTOR CH 1/10W 47K	8	
R62012-19		ERJ6GEYJ103	M.RESISTOR CH 1/10W 10K	8	
R62020-24		ERJ6GEYJ223	M.RESISTOR CH 1/10W 22K	5	
R62025		ERJ6GEYJ471	M.RESISTOR CH 1/10W 470	1	
R62026-36		ERJ6GEYJ103	M.RESISTOR CH 1/10W 10K	11	
R62037-40		ERJ6GEYJ223	M.RESISTOR CH 1/10W 22K	4	
R62041		ERJ6GEYJ392	M.RESISTOR CH 1/10W 3.9K	1	
R62042-52		ERJ6GEYJ473	M.RESISTOR CH 1/10W 47K	11	
R62059		ERJ6GEYJ102	M.RESISTOR CH 1/10W 1K	1	
R62070,71		ERJ14YJ330	M.RESISTOR CH 1/4W 33	2	
R62076-79		ERJ6GEYJ332	M.RESISTOR CH 1/10W 3.3K	4	
R62080		ERJ6GEYJ104	M.RESISTOR CH 1/10W 100K	1	
R62081		ERJ6GEYJ332	M.RESISTOR CH 1/10W 3.3K	1	
R62082		ERJ6GEYJ104	M.RESISTOR CH 1/10W 100K	1	
R62083		ERJ6GEYJ332	M.RESISTOR CH 1/10W 3.3K	1	
R62084		ERJ6GEYJ104	M.RESISTOR CH 1/10W 100K	1	
R62085		ERJ6GEYJ332	M.RESISTOR CH 1/10W 3.3K	1	
R62086		ERJ6GEYJ104	M.RESISTOR CH 1/10W 100K	1	
R62087		ERJ6GEYJ102	M.RESISTOR CH 1/10W 1K	1	
R62088,89		ERJ6GEYG472	M.RESISTOR CH 1/10W 4.7K	2	
R62090		ERJ6GEYJ564	M.RESISTOR CH 1/10W 560K	1	
R62091		ERJ6GEYJ681	M.RESISTOR CH 1/10W 680	1	
R62092,93		ERJ6GEYJ683	M.RESISTOR CH 1/10W 68K	2	
R62094		ERJ6GEYJ564	M.RESISTOR CH 1/10W 560K	1	
R62095,96		ERJ6GEYJ103	M.RESISTOR CH 1/10W 10K	2	
R62097-41		ERJ6GEYJ223	M.RESISTOR CH 1/10W 22K	5	
R62102,13		ERJ6GEYJ103	M.RESISTOR CH 1/10W 10K	2	
R62104		ERJ14YJ470	M.RESISTOR CH 1/4W 47	1	
R62105-17		ERJ14YJ330	M.RESISTOR CH 1/4W 33	3	
R62108		ERJ6GEYJ473	M.RESISTOR CH 1/10W 47K	1	
R62109		ERJ6GEYJ103	M.RESISTOR CH 1/10W 10K	1	
R62110-12		ERJ6GEYJ223	M.RESISTOR CH 1/10W 22K	3	
R62701-03		ERDS2TJ560	C.RESISTOR 1/4W 56	3	
R62704		ERDS2TJ470	C.RESISTOR 1/4W 47	1	
R62705-09		ERDS2TJ560	C.RESISTOR 1/4W 56	5	
SW62010-13		EVQQJ104K	SWITCH	4	<R>
SW62014,15		VSS0225	SWITCH	2	<R>
SW62016,17		VSS0324	SWITCH	2	<R>
SW62018-20		VSS0225	SWITCH	3	<R>
SW62021		VSS0324	SWITCH	1	<R>
SW62022,23		VSS0225	SWITCH	2	<R>
SW62501		VSP0151	SWITCH	1	<R>
SW62502-04		VSP0780	SWITCH	3	<R>
SW62701		VSP0791	SWITCH	1	<R>
SW62702		VSP0792	SWITCH	1	<R>
SW62703		VSP0788	SWITCH	1	<R>
SW62704		VSP0794	SWITCH	1	<R>
SW62705		VSP0790	SWITCH	1	<R>
SW62706		VSP0793	SWITCH	1	<R>
SW62707		VSP0795	SWITCH	1	<R>
SW62708		VSP0789	SWITCH	1	<R>
SW62709		VSP0795	SWITCH	1	<R>
X62001		VSX0140	CRYSTAL OSCILLATOR	1	<R>
			MISCELLANEOUS		
E43		VMX0985	SPACER	1	
E73		VJF0960	HOLDER	1	
E74		VMX2062	LED SPACER	2	
E76		VMS4950	P.C.BOARD POST	2	

Ref.No.		Part No.	Part Name & Description	Pcs	Remarks
E79		XYN26+C5FR	SCREW	14	
E77		VWJ10SW050L0	FLAT CABLE	1	
E78		VWJ18XW040L1	FLEXIBLE WIRE	1	
E75		VMS5528	P.C.B. SUPORT	5	
		VGF0506	SHIELD SHEET	1	
		VKC0295	BOARD SPACER	4	

Ref.No.		Part No.	Part Name & Description	Pcs	Remarks
		VEP06902G	P.C.BOARD W/COMPONENT		AG-8600E
			FRONT		
		VEP06929B	P.C.BOARD W/COMPONENT		
			FRONT LED		ON VEP06902G
		VEP06962B	P.C.BOARD W/COMPONENT		
			KEY BOARD		ON VEP06902G
C62002		ECEA1CKS470	E.CAPACITOR 16V 47U	1	
C62003		ECEA1AKS221	E.CAPACITOR 10V 220U	1	
C62004,05		ECEA1HKS220	E.CAPACITOR 50V 22U	2	
C62007		ECUM1H102KBN	C.CAPACITOR CH 50V 1000P	1	
C62008-10		ECUM1H101JCN	C.CAPACITOR CH 50V 100P	3	
C62011		ECEA1CKS330	E.CAPACITOR 16V 33U	1	
C62012		ECUM1H101JCN	C.CAPACITOR CH 50V 100P	1	
C62013		ECEA1AKS221	E.CAPACITOR 10V 220U	1	
C62014		ECUM1H103ZFN	C.CAPACITOR 50V 0.01U	1	
C62015,16		ECUM1H220JCN	C.CAPACITOR CH 50V 22P	2	
D62002		MA4056-M	DIODE	1	<R>
D62013-16		MA151K	DIODE	4	<R>
D62018-22		MA151K	DIODE	5	<R>
D62023-28		MA153	DIODE	6	<R>
D62029-31		MA152K	DIODE	3	<R>
D62032-35		MA151K	DIODE	4	<R>
D62036		MA701A	DIODE	1	<R>
D62047		MA152K	DIODE	1	<R>
D62050		MA151K	DIODE	1	<R>
D62701-07		MA165VT	DIODE	7	<R>
DP62001		VSL0312	DIODE	1	
IC62001		UPD75236J025	IC	1	<R>
IC62002		UPC393G2	IC	1	<R>
IC62003		MN1382-R	IC	1	
J62002		ERJ6GEY0R00	M.RESISTOR CH 1/10W 0	1	
J62004-07		ERJ6GEY0R00	M.RESISTOR CH 1/10W 0	4	
L62001		VLQEL05K121K	COIL	1	
LD62010,11		LN31GCPHLG4	COIL	2	
P62001-04		VJP3503	CONNECTOR	4	
P62005		VJP1236T	CONNECTOR (MALE) 9P	1	
P62006		VJS2949B010	CONNECTOR (FEMALE) 10P	1	
P62007		VJP3076	CONNECTOR	1	
P62008		VJP3530	CONNECTOR	1	
P62009		VJS2889A018	CONNECTOR	1	
P62501		VJS2949B010	CONNECTOR (FEMALE) 10P	1	
P62701		VJS2949B018	CONNECTOR	1	
Q62002-05		MSD601-R	TRANSISTOR	4	<R>
Q62006-08		MSB710-R	TRANSISTOR	3	<R>

Ref.No.	Part No.	Part Name & Description	Pcs	Remarks
QR62001	MRN1404	TRANSISTOR	1	<R>
R62001	ERJ6GEYJ103	M.RESISTOR CH 1/10W 10K	1	
R62003	ERJ6GEYJ104	M.RESISTOR CH 1/10W 100K	1	
R62004-11	ERJ6GEYJ473	M.RESISTOR CH 1/10W 47K	8	
R62012-19	ERJ6GEYJ103	M.RESISTOR CH 1/10W 10K	8	
R62020-24	ERJ6GEYJ223	M.RESISTOR CH 1/10W 22K	5	
R62025	ERJ6GEYJ471	M.RESISTOR CH 1/10W 470	1	
R62026-36	ERJ6GEYJ103	M.RESISTOR CH 1/10W 10K	11	
R62037-40	ERJ6GEYJ223	M.RESISTOR CH 1/10W 22K	4	
R62041	ERJ6GEYJ392	M.RESISTOR CH 1/10W 3.9K	1	
R62042-52	ERJ6GEYJ473	M.RESISTOR CH 1/10W 47K	11	
R62059	ERJ6GEYJ102	M.RESISTOR CH 1/10W 1K	1	
R62070,71	ERJ14YJ330	M.RESISTOR CH 1/4W 33	2	
R62076-79	ERJ6GEYJ332	M.RESISTOR CH 1/10W 3.3K	4	
R62080	ERJ6GEYJ104	M.RESISTOR CH 1/10W 100K	1	
R62081	ERJ6GEYJ332	M.RESISTOR CH 1/10W 3.3K	1	
R62082	ERJ6GEYJ104	M.RESISTOR CH 1/10W 100K	1	
R62083	ERJ6GEYJ332	M.RESISTOR CH 1/10W 3.3K	1	
R62084	ERJ6GEYJ104	M.RESISTOR CH 1/10W 100K	1	
R62085	ERJ6GEYJ332	M.RESISTOR CH 1/10W 3.3K	1	
R62088,89	ERJ6GEYG472	M.RESISTOR CH 1/10W 4.7K	2	
R62090	ERJ6GEYJ564	M.RESISTOR CH 1/10W 560K	1	
R62091	ERJ6GEYJ681	M.RESISTOR CH 1/10W 680	1	
R62092,93	ERJ6GEYJ683	M.RESISTOR CH 1/10W 68K	2	
R62094	ERJ6GEYJ564	M.RESISTOR CH 1/10W 560K	1	
R62095,96	ERJ6GEYJ103	M.RESISTOR CH 1/10W 10K	2	
R62097-01	ERJ6GEYJ223	M.RESISTOR CH 1/10W 22K	5	
R62102,03	ERJ6GEYJ103	M.RESISTOR CH 1/10W 10K	2	
R62108	ERJ6GEYJ473	M.RESISTOR CH 1/10W 47K	1	
R62109	ERJ6GEYJ103	M.RESISTOR CH 1/10W 10K	1	
R62110-12	ERJ6GEYJ223	M.RESISTOR CH 1/10W 22K	3	
R62701-03	ERDS2TJ560	C.RESISTOR 1/4W 56	3	
R62704	ERDS2TJ470	C.RESISTOR 1/4W 47	1	
R62705-07	ERDS2TJ560	C.RESISTOR 1/4W 56	3	
SW62010-13	EVQQJ104K	SWITCH	4	<R>
SW62014,15	VSS0225	SWITCH	2	<R>
SW62016	VSS0324	SWITCH	1	<R>
SW62017,18	VSS0225	SWITCH	2	<R>
SW62020	VSS0225	SWITCH	1	<R>
SW62021	VSS0324	SWITCH	1	<R>
SW62022,23	VSS0225	SWITCH	2	<R>
SW62501-04	VSP0829	SWITCH	4	<R>
SW62701	VSP0791	SWITCH	1	<R>
SW62702	VSP0792	SWITCH	1	<R>
SW62703	VSP0788	SWITCH	1	<R>
SW62704	VSP0794	SWITCH	1	<R>
SW62705	VSP0790	SWITCH	1	<R>
SW62706	VSP0793	SWITCH	1	<R>
SW62707	VSP0795	SWITCH	1	<R>
X62001	VSX0140	CRYSTAL OSCILLATOR	1	<R>
		MISCELLANEOUS		
E43	VMX0985	SPACER	1	
E73	VJF0960	HOLDER	1	
E74	VMX2062	LED SPACER	2	
E76	VMS4950	P.C.BOARD POST	2	
E79	XYN26+C5FR	SCREW	14	
E77	VWJ10SW050L0	FLAT CABLE	1	
E78	VWJ18XW040L1	FLEXIBLE WIRE	1	
E75	VMS5528	P.C.B. SUPORT	5	
	VKC0295	BOARD SPACER		

Ref.No.	Part No.	Part Name & Description	Pcs	Remarks
	VEP06904E	P.C.BOARD W/COMPONENT		AG-8700E
		SERVO & SYSCON		
C1501	ECEA1VGE220	E.CAPACITOR 35V 220U	1	
C1502	ECQV1H104JZ	P.CAPACITOR 50V 0.1U	1	
C1503	ECEA1DPS681	E.CAPACITOR 20V 680U	1	
C1504	ECQV1H104JZ	P.CAPACITOR 50V 0.1U	1	
C1505	ECEA1AGE221	E.CAPACITOR 10V 220U	1	
C1506	ECEA1CU101	E.CAPACITOR 16V 100U	1	
C1507	ECUM1H103ZFN	C.CAPACITOR 50V 0.01U	1	
C1508	ECQV1H104JZ	P.CAPACITOR 50V 0.1U	1	
C1509,10	ECEA1CU101	E.CAPACITOR 16V 100U	2	
C1511	ECEA1HU4R7	E.CAPACITOR 50V 4.7U	1	
C1512	ECEA1CU101	E.CAPACITOR 16V 100U	1	
C1513	ECQB1H103JF	P.CAPACITOR 50V 0.01U	1	
C1514	ECQB1H473JF	P.CAPACITOR 50V 0.047U	1	
C1515	ECUM1H223KBN	C.CAPACITOR 50V 0.022U	1	
C1517	ECEA1AU221	E.CAPACITOR 10V 220U	1	
C1518	ECEA1VU100	E.CAPACITOR 35V 10U	1	
C1519	ECEA1EGE470	E.CAPACITOR 25V 47U	1	
C1520	ECEA1EGE221	E.CAPACITOR 25V 220U	1	
C1521	ECEA1EGE470	E.CAPACITOR 25V 47U	1	
C1522	ECEA1CGE102	E.CAPACITOR 16V 1000U	1	
C1523	ECEA1EGE470	E.CAPACITOR 25V 47U	1	
C1524	ECEA1EGE221	E.CAPACITOR 25V 220U	1	
C1525	ECEA1AGE101	E.CAPACITOR 10V 100U	1	
C1526	ECEA1AGE471	E.CAPACOTOR 10V 47U	1	
C1527	ECEA1EGE221	E.CAPACITOR 25V 220U	1	
C1529	ECEA1EGE471	E.CAPACITOR 25V 470U	1	
C1530	ECEA1VGE220	E.CAPACITOR 35V 220U	1	
C1531	ECA0JFQ102	E.CAPACITOR 6.3V 1000U	1	
C1532	ECEA1AGE221	E.CAPACITOR 10V 220U	1	
C1533	ECUM1H103ZFN	C.CAPACITOR 50V 0.01U	1	
C1534	ECEA1EGE221	E.CAPACITOR 25V 220U	1	
C1541	ECEA1AGE101	E.CAPACITOR 10V 100U	1	
C1542	ECUM1H103KBN	C.CAPACITOR CH 50V 0.01U	1	
C2001	ECEA0JU470	E.CAPACITOR 6.3V 47U	1	
C2002	ECUM1H150JCN	C.CAPACITOR CH 50V 15P	1	
C2003	ECUM1H181JCN	C.CAPACITOR CH 50V 180P	1	
C2004	ECUM1H101JCN	C.CAPACITOR CH 50V 100P	1	
C2005	ECUM1H103ZFN	C.CAPACITOR 50V 0.01U	1	
C2006	ECUM1E104ZFN	C.CAPACITOR CH 25V 0.1U	1	
C2007	ECEA1AU330	E.CAPACITOR 10V 33U	1	
C2008	ECQB1H683JF	P.CAPACITOR 50V 0.068U	1	
C2009	ECUM1H103ZFN	C.CAPACITOR 50V 0.01U	1	
C2010	ECEA0JU470	E.CAPACITOR 6.3V 47U	1	
C2011	ECEA1AU220	E.CAPACITOR 10V 22U	1	
C2012	ECEA1CU470	E.CAPACITOR 16V 47U	1	
C2013-15	ECUM1H103ZFN	C.CAPACITOR 50V 0.01U	3	
C2016,17	ECEA0JU470	E.CAPACITOR 6.3V 47U	2	
C2018	ECUM1H103ZFN	C.CAPACITOR 50V 0.01U	1	
C2019	ECEA0JU470	E.CAPACITOR 6.3V 47U	1	
C2020	ECUM1H103ZFN	C.CAPACITOR 50V 0.01U	1	
C2021	ECQB1H152JF	P.CAPACITOR 50V 1500P	1	
C2022	ECUM1H103ZFN	C.CAPACITOR 50V 0.01U	1	
C2023	ECQV1H184JZ	P.CAPACITOR 50V 0.18U	1	
C2024	ECUM1H102JN	C.CAPACITOR CH 50V 1000P	1	
C2025	ECUM1H103ZFN	C.CAPACITOR 50V 0.01U	1	
C2026	ECEA1HU010	E.CAPACITOR 50V 1U	1	
C2027	ECEA0JU470	E.CAPACITOR 6.3V 47U	1	
C2028	ECUM1H103ZFN	C.CAPACITOR 50V 0.01U	1	
C2029	ECUM1H330JCN	C.CAPACITOR CH 50V 33P	1	
C2030	ECUM1H220JCN	C.CAPACITOR CH 50V 22P	1	
C2031	ECUM1H100DCN	C.CAPACITOR CH 50V 10P	1	
C2032	ECEA0JU470	E.CAPACITOR 6.3V 47U	1	
C2033,34	ECEA1CU100	E.CAPACITOR 16V 10U	2	
C2035	ECEA1HUR47	E.CAPACITOR 50V 0.47U	1	
C2044,45	ECUM1H271JCN	C.CAPACITOR CH 50V 270P	2	
C2046	ECEA1HUR47	E.CAPACITOR 50V 0.47U	1	
C2047	ECUM1E104ZFN	C.CAPACITOR CH 25V 0.1U	1	
C2050	ECUM1H103ZFN	C.CAPACITOR 50V 0.01U	1	
C2201	ECEA0JGE470	E.CAPACITOR 6.3V 47U	1	

Ref.No.		Part No.	Part Name & Description	Pcs	Remarks
C2202,03		ECUM1H103ZFN	C.CAPACITOR 50V 0.01U	2	
C2204,05		ECUM1H220JCN	C.CAPACITOR CH 50V 22P	2	
C2206		ECEA0JU470	E.CAPACITOR 6.3V 47U	1	
C2207,08		ECUM1H103ZFN	C.CAPACITOR 50V 0.01U	2	
C2209,10		ECUM1H220JCN	C.CAPACITOR CH 50V 22P	2	
C2214		ECUM1H101JCN	C.CAPACITOR CH 50V 100P	1	
C2215		ECUM1H103ZFN	C.CAPACITOR 50V 0.01U	1	
C2216		ECEA0JU470	E.CAPACITOR 6.3V 47U	1	
C2217,18		ECUM1H103ZFN	C.CAPACITOR 50V 0.01U	2	
C2219		ECEA0JU470	E.CAPACITOR 6.3V 47U	1	
C2220,21		ECUM1H103ZFN	C.CAPACITOR 50V 0.01U	2	
C2222		ECEA0JU470	E.CAPACITOR 6.3V 47U	1	
C2223,24		ECUM1H103ZFN	C.CAPACITOR 50V 0.01U	2	
C2225		ECEA0JU470	E.CAPACITOR 6.3V 47U	1	
C2226		ECUM1H103ZFN	C.CAPACITOR 50V 0.01U	1	
C2227		ECEA0JU470	E.CAPACITOR 6.3V 47U	1	
C2228-30		ECUM1H103ZFN	C.CAPACITOR 50V 0.01U	3	
C2231		ECEA0JU470	E.CAPACITOR 6.3V 47U	1	
C2232-34		ECUM1H103ZFN	C.CAPACITOR 50V 0.01U	3	
C2235		ECUM1H820JCN	C.CAPACITOR CH 50V 82P	1	
C2236		ECQB1H333JF	P.CAPACITOR 50V 0.033U	1	
C2237,38		ECEA0JU470	E.CAPACITOR 6.3V 47U	2	
C2239-41		ECUM1H103ZFN	C.CAPACITOR 50V 0.01U	3	
C2243		ECUM1H103ZFN	C.CAPACITOR 50V 0.01U	1	
C2244		ECEA1CU100	E.CAPACITOR 16V 10U	1	
C2245-47		ECUM1H103ZFN	C.CAPACITOR 50V 0.01U	3	
C2318,19		ECEA0JU470	E.CAPACITOR 6.3V 47U	2	
C2320		ECUM1H222KBN	C.CAPACITOR CH 50V 2200P	1	
C2321		ECUM1H103ZFN	C.CAPACITOR 50V 0.01U	1	
C2322		ECEA1HN4R7S	E.CAPACITOR 50V 4.7U	1	
C2323		ECUM1H561JCN	C.CAPACITOR CH 50V 560P	1	
C2327,28		ECEA0JU470	E.CAPACITOR 6.3V 47U	2	
C2330		ECQP1H103JZ	P.CAPACITOR 50V 0.01U	1	
C2331		ECQB1H104JF	P.CAPACITOR 50V 0.1U	1	
C2335,36		ECEA0JU470	E.CAPACITOR 6.3V 47U	2	
C2338		ECQB1H103JF	P.CAPACITOR 50V 0.01U	1	
C2339		ECUM1H331JCN	C.CAPACITOR CH 50V 330P	1	
C2340-44		ECUM1H103ZFN	C.CAPACITOR 50V 0.01U	5	
C2350		ECEA1CU470	E.CAPACITOR 16V 47U	1	
C2351		ECUM1H103ZFN	C.CAPACITOR 50V 0.01U	1	
C2352,53		ECEA1CU470	E.CAPACITOR 16V 47U	2	
C2354		ECUM1H103ZFN	C.CAPACITOR 50V 0.01U	1	
C2355		ECEA1HU010	E.CAPACITOR 50V 1U	1	
C2401,02		ECUM1H103ZFN	C.CAPACITOR 50V 0.01U	2	
C2403		ECEA1CU470	E.CAPACITOR 16V 47U	1	
C2404,05		ECUM1H330JCN	C.CAPACITOR CH 50V 33P	2	
C2406-09		ECUM1H103ZFN	C.CAPACITOR 50V 0.01U	4	
C2410		ECEA0JU470	E.CAPACITOR 6.3V 47U	1	
C2501		ECQB1H473JF	P.CAPACITOR 50V 0.047U	1	
C2502		ECQB1H222JF	P.CAPACITOR 50V 2200P	1	
C2503		ECQB1H273JF	P.CAPACITOR 50V 0.027U	1	
C2504		ECQB1H222JF	P.CAPACITOR 50V 2200P	1	
C2510		ECEA1CU470	E.CAPACITOR 16V 47U	1	
C2512-14		ECUM1H103ZFN	C.CAPACITOR 50V 0.01U	3	
C2516-19		ECUM1H103ZFN	C.CAPACITOR 50V 0.01U	4	
C2701		ECEA1CU101	E.CAPACITOR 16V 100U	1	
C2702		ECUM1H820JCN	C.CAPACITOR CH 50V 82P	1	
C2703		ECUM1H561JCN	C.CAPACITOR CH 50V 560P	1	
C2704		ECUM1H271JCN	C.CAPACITOR CH 50V 270P	1	
C2705		ECEA1HU010	E.CAPACITOR 50V 1U	1	
C2709		ECEA1HU010	E.CAPACITOR 50V 1U	1	
C2710		ECUM1H103ZFN	C.CAPACITOR 50V 0.01U	1	
C2711		ECQB1H222JF	P.CAPACITOR 50V 2200P	1	
C2712		ECEA1EU221	E.CAPACITOR 25V 220U	1	
C2714		ECQV1H474JZ	P.CAPACITOR 50V 0.47U	1	
C2716,17		ECEA1EU101	E.CAPACITOR 25V 100U	2	
C2718		ECQV1H474JZ	P.CAPACITOR 50V 0.47U	1	
C2722		ECUM1H102JN	C.CAPACITOR CH 50V 1000P	1	
C2723		ECEA1EU221	E.CAPACITOR 25V 220U	1	
C2724		ECUM1H102JN	C.CAPACITOR CH 50V 1000P	1	
C2725		ECEA1EU221	E.CAPACITOR 25V 220U	1	
C2726		ECEA0JU470	E.CAPACITOR 6.3V 47U	1	
C2727-30		ECQV1H104JZ	P.CAPACITOR 50V 0.1U	4	
C2731-33		ECEA1HN4R7S	E.CAPACITOR 50V 4.7U	3	
C2734		ECQB1H473JF	P.CAPACITOR 50V 0.047U	1	

Ref.No.		Part No.	Part Name & Description	Pcs	Remarks
C2735		ECEA0JU470	E.CAPACITOR 6.3V 47U	1	
C2736		ECQB1H683JF	P.CAPACITOR 50V 0.068U	1	
C2737		ECUM1H103ZFN	C.CAPACITOR 50V 0.01U	1	
C2738		ECEA1CU470	E.CAPACITOR 16V 47U	1	
C2739		ECEA0JU470	E.CAPACITOR 6.3V 47U	1	
C2740		ECEA1EU470	E.CAPACITOR 25V 47U	1	
C2741		ECUM1H333KBN	C.CAPACITOR CH 50V 0.033U	1	
C2742		ECQB1H104JF	P.CAPACITOR 50V 0.1U	1	
C2744-46		ECEA1HU2R2	E.CAPACITOR 50V 2.2U	3	
C2747-50		ECUM1H333KBN	C.CAPACITOR CH 50V 0.033U	4	
C2751-53		ECUM1H103ZFN	C.CAPACITOR 50V 0.01U	3	
C2754		ECEA0JU470	E.CAPACITOR 6.3V 47U	1	
C2755-57		ECUM1H102JN	C.CAPACITOR CH 50V 1000P	3	
C2758		ECEA1HNR47S	E.CAPACITOR 50V 0.47U	1	
C2759		ECUM1H221JCN	C.CAPACITOR CH 50V 220P	1	
C2760		ECEA1HN2R2S	E.CAPACITOR 50V 2.2U	1	
C2761		ECUM1H101JCN	C.CAPACITOR CH 50V 100P	1	
C2762		ECEA1HU2R2	E.CAPACITOR 50V 2.2U	1	
C2763		ECEA0JU470	E.CAPACITOR 6.3V 47U	1	
C2764		ECEA0JU220	E.CAPACITOR 6.3V 22U	1	
C2765		ECUM1H221JCN	C.CAPACITOR CH 50V 220P	1	
C2766		ECEA1HN2R2S	E.CAPACITOR 50V 2.2U	1	
C2767		ECUM1H101JCN	C.CAPACITOR CH 50V 100P	1	
C2768		ECEA1HU2R2	E.CAPACITOR 50V 2.2U	1	
C2769,70		ECUM1H102JN	C.CAPACITOR CH 50V 1000P	2	
C2793		ECEA1HU4R7	E.CAPACITOR 50V 4.7U	1	
C2804,05		ECEA1EU472	E.CAPACITOR 25V 4700U	2	
C2806		ECEA1HU4R7	E.CAPACITOR 50V 4.7U	1	
C60001		ECUM1H103ZFN	C.CAPACITOR 50V 0.01U	1	
C60002,03		ECEA1CU102	E.CAPACITOR 16V 1000U	2	
C60005		ECEA0JU332	E.CAPACITOR 6.3V 3300U	1	
C60006		ECUM1H103ZFN	C.CAPACITOR 50V 0.01U	1	
C60007		ECEA1HU010	E.CAPACITOR 50V 1U	1	
C60008		ECEA0JU470	E.CAPACITOR 6.3V 47U	1	
C60009		ECEA0JU332	E.CAPACITOR 6.3V 3300U	1	
C60010		ECQB1H333JF	P.CAPACITOR 50V 0.033U	1	
C60011		ECQB1H472JF	P.CAPACITOR 50V 4700P	1	
C60012		ECQB1H103JF	P.CAPACITOR 50V 0.01U	1	
C60013		ECEA1CU100	E.CAPACITOR 16V 10U	1	
C60016		ECUM1H221JCN	C.CAPACITOR CH 50V 220P	1	
C60017		ECUM1H103ZFN	C.CAPACITOR 50V 0.01U	1	
C60018,19		ECUM1H330JCN	C.CAPACITOR CH 50V 33P	2	
C60020		ECEA1HU010	E.CAPACITOR 50V 1U	1	
C60021		ECEA1HU4R7	E.CAPACITOR 50V 4.7U	1	
C60022		ECEA1AU220	E.CAPACITOR 10V 22U	1	
C60023		ECUM1E104ZFN	C.CAPACITOR CH 25V 0.1U	1	
C60024		ECEA0JU682	E.CAPACITOR 6.3V 6800U	1	
C60026		ECUM1H104ZFN	C.CAPACITOR 50V 0.1U	1	
C60027		ECUM1H103ZFN	C.CAPACITOR 50V 0.01U	1	
C60101		ECUM1H103ZFN	C.CAPACITOR 50V 0.01U	1	
C60102		ECEA1CU470	E.CAPACITOR 16V 47U	1	
C60103-06		ECQB1H102JF	P.CAPACITOR 50V 1000P	4	
C60107		ECUM1H151JCN	C.CAPACITOR CH 50V 150P	1	
C60108		ECEA1CU221	E.CAPACITOR 16V 220U	1	
C60109		ECUM1H103ZFN	C.CAPACITOR 50V 0.01U	1	
C60110,11		ECEA1CU100	E.CAPACITOR 16V 10U	2	
C60112		ECEA1CU470	E.CAPACITOR 16V 47U	1	
C60501		ECEA1EU4R7	E.CAPACITOR 25V 4.7U	1	
C60502		ECQB1H104JF	P.CAPACITOR 50V 0.1U	1	
C60503		ECEA1HN010S	E.CAPACITOR 50V 1U	1	
C60504		ECUM1H103ZFN	C.CAPACITOR 50V 0.01U	1	
C60505		ECEA1EN101S	E.CAPACITOR 25V 100U	1	
C60506		ECEA1CU101	E.CAPACITOR 16V 100U	1	
C60507		ECEA0JU470	E.CAPACITOR 6.3V 47U	1	
C60508,09		ECUM1H101JCN	C.CAPACITOR CH 50V 100P	2	
D1502-04		MA151K	DIODE	3	<R>
D1505		MA701A	DIODE	1	<R>
D1507		MA151K	DIODE	1	<R>
D1508		MA3020	DIODE	1	<R>
D1509		8P2M	DIODE	1	<R>
D1510		MA165VT	DIODE	1	<R>
D1511		MA151K	DIODE	1	<R>

Ref.No.		Part No.	Part Name & Description	Pcs	Remarks
D1512		VSD0002	DIODE	1	<R>
D1513		AK04	DIODE	1	<R>
D1514		MA1270-M	DIODE	1	<R>
D1515		MA185	DIODE	1	<R>
D1516		MA4075M	DIODE	1	<R>
D1517		MA4130M	DIODE	1	<R>
D1518		MA4120-M	DIODE	1	<R>
D1519,20		MA151K	DIODE	2	<R>
D1522		MA3160-L	DIODE	1	<R>
D1523		11EQS04	DIODE	1	<R>
D1524		MA4047M	DIODE	1	<R>
D1525,26		MA723VT	DIODE	2	<R>
D1528		MA4056M	DIODE	1	<R>
D1529		MA165VT	DIODE	1	<R>
D1530		MA4075M	DIODE	1	<R>
D1531		MA151K	DIODE	1	<R>
D1532		MA3068M	DIODE	1	<R>
D1541		MA3091-M	DIODE	1	<R>
D1542		MA4039	DIODE	1	<R>
D1543,44		MA151K	DIODE	2	<R>
D2001		MA151K	DIODE	1	<R>
D2002		MA151WA	DIODE	1	<R>
D2003		MA151K	DIODE	1	<R>
D2006		MA151WA	DIODE	1	<R>
D2007,08		MA151K	DIODE	2	<R>
D2308		MA151K	DIODE	1	<R>
D2309		MA151WK	DIODE	1	<R>
D2310		MA153	DIODE	1	<R>
D2401		MA151K	DIODE	1	<R>
D2501,02		MA151K	DIODE	2	<R>
D2701		MA4180-L	DIODE	1	<R>
D2703		MA4160-L	DIODE	1	<R>
D2704		11DQ04	DIODE	1	<R>
D2705		MA151K	DIODE	1	<R>
D2715,16		11DQ04	DIODE	2	<R>
D2717-19		11EQS04	DIODE	3	<R>
D2720		MA153	DIODE	1	<R>
D2721		11EQS04	DIODE	1	<R>
D2722		MA153	DIODE	1	<R>
D2723		11EQS04	DIODE	1	<R>
D2727		11EQS04	DIODE	1	<R>
D2734,35		MA4160-L	DIODE	2	<R>
D2736-38		MA4160-M	DIODE	3	<R>
D2741,42		MA4062M	DIODE	2	<R>
D2743		MA723VT	DIODE	1	<R>
D60001		11EQS04	DIODE	1	<R>
D60002		MA170	DIODE	1	<R>
D60003-06		11EQS04	DIODE	4	<R>
D60008		MA3043-M	DIODE	1	<R>
D60009		11ES1	DIODE	1	<R>
D60501,02		MA151K	DIODE	2	<R>
D60503		10E1	DIODE	1	<R>
D60504		MA151K	DIODE	1	<R>
D60505		MA170	DIODE	1	<R>
D60506		MA151K	DIODE	1	<R>
FA2202		VLF1036D101	FILTER	1	
FL2201-06		VLF0634	FILTER	6	
FL60001		VLF0630	FILTER	1	
IC1501		LM393PS	IC	1	<R>
IC1502		AN7912F	IC	1	<R>
IC1503		AN7905F	IC	1	<R>
IC1505,06		TL431CLP	IC	2	<R>
IC2001		MN6742VMEP	IC	1	<R>
IC2002		MN1382-R	IC	1	
IC2003		BA226F	IC	1	<R>
IC2004		MC14052BF	IC	1	<R>

Ref.No.		Part No.	Part Name & Description	Pcs	Remarks
IC2006		TC4S30F	IC	1	<R>
IC2007,08		MN53015VZW	IC	2	<R>
IC2009		TC4W53F	IC	1	<R>
IC2010		LM339NS	IC	1	<R>
IC2012		MC74HCU04F	IC	1	<R>
IC2013		LM358PS	IC	1	<R>
IC2014		TC7S32F	IC	1	<R>
IC2201		MN19041VMCX	IC	1	<R>
IC2202		L7A0269	IC	1	<R>
IC2203		PCM55HP	IC	1	<R>
IC2206		MC14050BF	IC	1	<R>
IC2207		LM358PS	IC	1	<R>
IC2302		NJM4556MB	IC	1	<R>
IC2303		LM358PS	IC	1	<R>
IC2304		LM393PS	IC	1	<R>
IC2305		MC14053BF	IC	1	<R>
IC2310		BA6302AF	IC	1	<R>
IC2311		MC14053BF	IC	1	<R>
IC2312		MC14013BF	IC	1	<R>
IC2401		MC14013BF	IC	1	<R>
IC2402		TC4W53F	IC	1	<R>
IC2403,04		TC7S02F	IC	2	<R>
IC2405		TC7S08F	IC	1	<R>
IC2406		M50927-531SP	IC	1	<R>
IC2501,02		LM324NS	IC	2	<R>
IC2503		LM393PS	IC	1	<R>
IC2505		MC14053BF	IC	1	<R>
IC2506		MC14052BF	IC	1	<R>
IC2507		MC14053BF	IC	1	<R>
IC2701		BA6149LS	IC	1	<R>
IC2703		AN3815K	IC	1	<R>
IC2704		XRA6435S	IC	1	<R>
IC2705		LM393PS	IC	1	<R>
IC2706		LM358PS	IC	1	<R>
IC2707		LM393PS	IC	1	<R>
IC2708		LM358PS	IC	1	<R>
IC2709		LM393PS	IC	1	<R>
IC2710,11		UPC4556G2	IC	2	<R>
IC2715		AN78N12	IC	1	<R>
IC60001		TD62503F	IC	1	<R>
IC60002		MN188166VCTG	IC	1	<R>
IC60003		MN1382-R	IC	1	
IC60101		LM324NS	IC	1	<R>
IC60501		LM393PS	IC	1	<R>
IC60502		M54649L	IC	1	<R>
IC60503		MN1382-R	IC	1	
J2002-04		ERJ6GEYOR00	M.RESISTOR CH 1/10W 0	3	
J2202		ERJ6GEYOR00	M.RESISTOR CH 1/10W 0	1	
J2204,05		ERJ6GEYOR00	M.RESISTOR CH 1/10W 0	2	
J2207-12		ERJ6GEYOR00	M.RESISTOR CH 1/10W 0	6	
J60001		ERJ6GEYOR00	M.RESISTOR CH 1/10W 0	1	
J60003		ERJ6GEYOR00	M.RESISTOR CH 1/10W 0	1	
J60005,06		ERJ6GEYOR00	M.RESISTOR CH 1/10W 0	2	
K1501		ERJ6GEYOR00	M.RESISTOR CH 1/10W 0	1	
K1502		ERDS2TO	C.RESISTOR 1/4W 0	1	
L1501		VLQEL06R101K	COIL	1	
L1502,03		VLP0074		2	
L2001,02		VLQEL05S470J	COIL 47UH	2	
L2004-06		VLQEL05S470J	COIL 47UH	3	
L2007		VLP0054	COIL	1	
L2008		VLQEL05S470J	COIL 47UH	1	
L2201,02		VLQEL05S2R2K	COIL 2.2UH	2	
L2203-05		VLP0054	COIL	3	
L2206,07		VLQEL05S2R2K	COIL 2.2UH	2	
L2208		VLQEL05S470J	COIL 47UH	1	
L2301-04		VLQEL05S470J	COIL 47UH	4	

Ref.No.		Part No.	Part Name & Description	Pcs	Remarks
L2401		VLQEL05S470J	COIL 47UH	1	
L2502		VLQEL05S470J	COIL 47UH	1	
L2701		VLQ0128	COIL 47UH	1	
L2702-04		VLQ0129	COIL 300UH	3	
L2705		VLQEL05S470J	COIL 47UH	1	
L2707		VLQEL05S470J	COIL 47UH	1	
L2711		VLQEL05S470J	COIL 47UH	1	
L60001		VLQEL05S471K	COIL 470UH	1	
L60002		VLQEL05S470J	COIL 47UH	1	
L60501		VLQEL05S150K	COIL 15UH	1	
P1501		VJP1146	CONNECTOR	1	
P1502		VJP3076	CONNECTOR	1	
P1503		VJP1147	CONNECTOR (MALE) 12P	1	
P2201-03		VJS3202B020Z	CONNECTOR (FEMALE) 20P	3	
P2301		VJP1230T	CONNECTOR (MALE) 3P	1	
P2701		VJP3078	CONNECTOR (MALE)	1	
P2702		VJP3083	CONNECTOR (MALE)	1	
P2703		VJS2149W	CONNECTOR (FEMALE)	1	
P60001		VJP1230R	CONNECTOR (MALE) 3P	1	
P60003		VJS3135	CONNECTOR (FEMALE)	1	
P60501		VJS2149W	CONNECTOR (FEMALE)	1	
P60502		VJP1230T	CONNECTOR (MALE) 3P	1	
P60503		VJS3134	CONNECTOR	1	
Q1501		2SD1474	TRANSISTOR	1	<R>
Q1502		2SD973A-R	TRANSISTOR	1	<R>
Q1503		2SD1474	TRANSISTOR	1	<R>
Q1504		2SD1273	TRANSISTOR	1	<R>
Q1505		2SD973A	TRANSISTOR	1	<R>
Q2001		MSC2295-B	TRANSISTOR	1	<R>
Q2302-05		MSD601-R	TRANSISTOR	4	<R>
Q2703		MSB709-R	TRANSISTOR	1	<R>
Q2704		2SB1151	TRANSISTOR	1	<R>
Q2705-07		2SD601A-R	TRANSISTOR	3	<R>
Q2709-11		2SB772	TRANSISTOR	3	<R>
Q2713-16		MSB709-R	TRANSISTOR	4	<R>
Q60001		2SD638	TRANSISTOR	1	<R>
Q60002		MSB709-R	TRANSISTOR	1	<R>
Q60003		2SB819	TRANSISTOR	1	<R>
Q60004		MSD601-R	TRANSISTOR	1	<R>
Q60005		2SB819	TRANSISTOR	1	<R>
Q60006		MSD601-R	TRANSISTOR	1	<R>
Q60007		MSD602-R	TRANSISTOR	1	<R>
Q60008		2SD636	TRANSISTOR	1	<R>
Q60501-03		MSD601-R	TRANSISTOR	3	<R>
Q60504		2SB819	TRANSISTOR	1	<R>
Q60505		MSD601-R	TRANSISTOR	1	<R>
Q60506		2SD1273-Q	TRANSISTOR	1	<R>
Q60507		MSD601-R	TRANSISTOR	1	<R>
Q60508		2SB941	TRANSISTOR	1	<R>
Q60509		MSD601-R	TRANSISTOR	1	<R>
QR1502		MRN2402	TRANSISTOR	1	<R>
QR1503		MRN1402	TRANSISTOR	1	<R>
QR1541		UN2219	TRANSISTOR	1	<R>
QR2005		MRN1404	TRANSISTOR	1	<R>
QR2304,05		MRN2402	TRANSISTOR	2	<R>
QR2306		MRN1404	TRANSISTOR	1	<R>
QR2308		MRN1404	TRANSISTOR	1	<R>
QR2309		MRN2404	TRANSISTOR	1	<R>
QR2310		MRN1403	TRANSISTOR	1	<R>
QR2311,12		MRN1404	TRANSISTOR	2	<R>
QR2313		MRN2404	TRANSISTOR	1	<R>
QR2314		MRN1404	TRANSISTOR	1	<R>
QR2401		MRN1404	TRANSISTOR	1	<R>
QR2402		MRN2404	TRANSISTOR	1	<R>
QR2501-05		MRN1404	TRANSISTOR	5	<R>
QR2701		MRN1404	TRANSISTOR	1	<R>

Ref.No.		Part No.	Part Name & Description	Pcs	Remarks
QR2702		MRN2404	TRANSISTOR	1	<R>
QR2703		MRN1404	TRANSISTOR	1	<R>
QR2704		MRN1403	TRANSISTOR	1	<R>
QR60001		MRN2402	TRANSISTOR	1	<R>
QR60002		MRN1403	TRANSISTOR	1	<R>
QR60003		MRN2402	TRANSISTOR	1	<R>
QR60004		MRN1404	TRANSISTOR	1	<R>
QR60006-08		MRN1404	TRANSISTOR	3	<R>
QR60010		MRN1404	TRANSISTOR	1	<R>
QR60012		UN2219	TRANSISTOR	1	<R>
QR60013		MRN1402	TRANSISTOR	1	<R>
QR60501		MRN1402	TRANSISTOR	1	<R>
QR60502		UN211F	TRANSISTOR	1	<R>
QR60503		MRN1404	TRANSISTOR	1	<R>
R1501		ERDS2TJ181	C.RESISTOR 1/4W 180	1	
R1502		ERJ6GEYJ102	M.RESISTOR CH 1/10W 1K	1	
R1504		ERDS2TJ181	C.RESISTOR 1/4W 180	1	
R1505		VRE0034E103	M.RESISTOR CH 1/10W 10K	1	
R1506		VRE0034E473	M.RESISTOR CH 1/10W 47K	1	
R1507		VRE0034E222	M.RESISTOR CH 1/10W 2.2K	1	
R1509		ERJ6GEYJ102	M.RESISTOR CH 1/10W 1K	1	
R1510		ERJ6GEYJ331	M.RESISTOR CH 1/10W 330	1	
R1511		ERJ6GEYJ224	M.RESISTOR CH 1/10W 220K	1	
R1512-14		ERJ6GEYJ103	M.RESISTOR CH 1/10W 10K	3	
R1515		ERDS2TJ222	C.RESISTOR 1/4W 2.2K	1	
R1516-18		ERJ6GEYJ103	M.RESISTOR CH 1/10W 10K	3	
R1519		ERDS2TJ333	C.RESISTOR 1/4W 33K	1	
R1520		ERJ6GEYJ332	M.RESISTOR CH 1/10W 3.3K	1	
R1521		ERDS2TJ221	C.RESISTOR 1/4W 220	1	
R1522		ERDS2TJ181	C.RESISTOR 1/4W 180	1	
R1525		ERDS2TJ222	C.RESISTOR 1/4W 2.2K	1	
R1526,27		ERJ6GEYJ331	M.RESISTOR CH 1/10W 330	2	
R1528,29		ERDS2TJ181	C.RESISTOR 1/4W 180	2	
R1531		ERJ6GEYJ102	M.RESISTOR CH 1/10W 1K	1	
R1532		VRE0034E562	M.RESISTOR CH 1/10W 5.6K	1	
R1533		VRE0034E392	M.RESISTOR CH 1/10W 3.9K	1	
R1534		VRE0034E222	M.RESISTOR CH 1/10W 2.2K	1	
R1535		ERJ6GEYJ123	M.RESISTOR CH 1/10W 12K	1	
R1536		ERJ6GEYJ103	M.RESISTOR CH 1/10W 10K	1	
R1541,42		ERJ6GEYJ103	M.RESISTOR CH 1/10W 10K	2	
R2001		ERJ6GEYJ471	M.RESISTOR CH 1/10W 470	1	
R2002		ERJ6GEYJ103	M.RESISTOR CH 1/10W 10K	1	
R2003,04		ERJ6GEYG333	M.RESISTOR CH 1/10W 33K	2	
R2005-07		ERJ6GEYJ102	M.RESISTOR CH 1/10W 1K	3	
R2008		ERJ6GEYJ222	M.RESISTOR CH 1/10W 2.2K	1	
R2009,10		ERJ6GEYJ102	M.RESISTOR CH 1/10W 1K	2	
R2013		ERJ6GEYJ332	M.RESISTOR CH 1/10W 3.3K	1	
R2017,18		ERJ6GEYJ103	M.RESISTOR CH 1/10W 10K	2	
R2019		ERJ6GEYJ124	M.RESISTOR CH 1/10W 120K	1	
R2020		ERJ6GEYJ103	M.RESISTOR CH 1/10W 10K	1	
R2021		ERJ6GEYJ683	M.RESISTOR CH 1/10W 68K	1	
R2022		ERJ6GEYJ102	M.RESISTOR CH 1/10W 1K	1	
R2023		ERJ6GEYJ224	M.RESISTOR CH 1/10W 220K	1	
R2024,25		ERJ6GEYJ103	M.RESISTOR CH 1/10W 10K	2	
R2026		ERJ6GEYJ184	M.RESISTOR CH 1/10W 180K	1	
R2027		ERJ6GEYJ105	M.RESISTOR CH 1/10W 1M	1	
R2028		ERJ6GEYJ562	M.RESISTOR CH 1/10W 5.6K	1	
R2029		ERJ6GEYJ102	M.RESISTOR CH 1/10W 1K	1	
R2030		ERJ6GEYJ223	M.RESISTOR CH 1/10W 22K	1	
R2031		ERJ6GEYG241	M.RESISTOR CH 1/10W 240	1	
R2032		ERJ6GEYJ473	M.RESISTOR CH 1/10W 47K	1	
R2033		ERJ6GEYJ224	M.RESISTOR CH 1/10W 220K	1	
R2035,36		ERJ6GEYJ101	M.RESISTOR CH 1/10W 100	2	
R2047		ERJ6GEYJ332	M.RESISTOR CH 1/10W 3.3K	1	
R2048		ERJ6GEYJ471	M.RESISTOR CH 1/10W 470	1	
R2049		ERJ6GEYJ103	M.RESISTOR CH 1/10W 10K	1	
R2051		ERJ6GEYJ101	M.RESISTOR CH 1/10W 100	1	
R2054-56		ERJ6GEYJ101	M.RESISTOR CH 1/10W 100	3	
R2059,60		ERJ6GEYJ101	M.RESISTOR CH 1/10W 100	2	
R2062		ERJ6GEYJ101	M.RESISTOR CH 1/10W 100	1	
R2064		ERJ6GEYJ103	M.RESISTOR CH 1/10W 10K	1	
R2066,67		ERJ6GEY0R00	M.RESISTOR CH 1/10W 0	2	

Ref.No.	Part No.	Part Name & Description	Pcs	Remarks
R2201	ERJ6GEYJ105	M.RESISTOR CH 1/10W 1M	1	
R2202	ERJ6GEYJ101	M.RESISTOR CH 1/10W 100	1	
R2203	ERJ6GEYJ331	M.RESISTOR CH 1/10W 330	1	
R2205,06	ERJ6GEYJ473	M.RESISTOR CH 1/10W 47K	2	
R2207	ERJ6GEYJ103	M.RESISTOR CH 1/10W 10K	1	
R2208	ERJ6GEYG104	M.RESISTOR CH 1/10W 100K	1	
R2211	ERJ6GEYG473	M.RESISTOR CH 1/10W 47K	1	
R2212	ERJ6GEYJ103	M.RESISTOR CH 1/10W 10K	1	
R2213-18	ERJ6GEYJ101	M.RESISTOR CH 1/10W 100	6	
R2220-23	ERJ6GEYJ101	M.RESISTOR CH 1/10W 100	4	
R2240	ERJ6GEYG473	M.RESISTOR CH 1/10W 47K	1	
R2241	ERJ6GEYG104	M.RESISTOR CH 1/10W 100K	1	
R2242	ERJ6GEYJ101	M.RESISTOR CH 1/10W 100	1	
R2331	ERJ6GEYJ222	M.RESISTOR CH 1/10W 2.2K	1	
R2332	ERJ6GEYJ683	M.RESISTOR CH 1/10W 68K	1	
R2333	ERJ6GEYJ101	M.RESISTOR CH 1/10W 100	1	
R2334	ERJ6GEYJ104	M.RESISTOR CH 1/10W 100K	1	
R2335	ERJ6GEYG333	M.RESISTOR CH 1/10W 33K	1	
R2336	ERJ6GEYJ822	M.RESISTOR CH 1/10W 8.2K	1	
R2337	ERJ6GEYG242	M.RESISTOR CH 1/10W 2.4K	1	
R2338	ERJ6GEYJ822	M.RESISTOR CH 1/10W 8.2K	1	
R2339	ERJ6GEYJ104	M.RESISTOR CH 1/10W 100K	1	
R2340,41	ERJ6GEYJ392	M.RESISTOR CH 1/10W 3.9K	2	
R2342	ERJ6GEYJ681	M.RESISTOR CH 1/10W 680	1	
R2343	ERJ6GEYJ473	M.RESISTOR CH 1/10W 47K	1	
R2344	ERJ6GEYJ563	M.RESISTOR CH 1/10W 56K	1	
R2345	ERJ6GEYG153	M.RESISTOR CH 1/10W 15K	1	
R2346	ERJ6GEYJ563	M.RESISTOR CH 1/10W 56K	1	
R2347	ERJ6GEYJ124	M.RESISTOR CH 1/10W 120K	1	
R2352	ERJ6GEYJ752	M.RESISTOR CH 1/10W 7.5K	1	
R2353,54	ERJ6GEYJ103	M.RESISTOR CH 1/10W 10K	2	
R2355	ERJ6GEYJ752	M.RESISTOR CH 1/10W 7.5K	1	
R2356	ERJ6GEYJ104	M.RESISTOR CH 1/10W 100K	1	
R2357,58	ERJ6GEYJ272	M.RESISTOR CH 1/10W 2.7K	2	
R2359	ERJ6GEYJ104	M.RESISTOR CH 1/10W 100K	1	
R2360,61	ERJ6GEYJ222	M.RESISTOR CH 1/10W 2.2K	2	
R2362	ERJ6GEYG472	M.RESISTOR CH 1/10W 4.7K	1	
R2363	ERJ6GEYG153	M.RESISTOR CH 1/10W 15K	1	
R2364	ERJ6GEYG913	M.RESISTOR CH 1/10W 91K	1	
R2370,71	ERJ6GEYJ103	M.RESISTOR CH 1/10W 10K	2	
R2372	ERJ6GEYG153	M.RESISTOR CH 1/10W 15K	1	
R2373	ERDS2TJ122	C.RESISTOR 1/4W 1.2K	1	
R2374	ERJ6GEYG472	M.RESISTOR CH 1/10W 4.7K	1	
R2375	ERJ6GEYJ562	M.RESISTOR CH 1/10W 5.6K	1	
R2376	ERJ6GEYJ561	M.RESISTOR CH 1/10W 560	1	
R2377	ERJ6GEYJ473	M.RESISTOR CH 1/10W 47K	1	
R2378	ERJ6GEYJ154	M.RESISTOR CH 1/10W 150K	1	
R2379	ERJ6GEYJ104	M.RESISTOR CH 1/10W 100K	1	
R2380	ERJ6GEYJ101	M.RESISTOR CH 1/10W 100	1	
R2381	ERDS2TJ122	C.RESISTOR 1/4W 1.2K	1	
R2401	ERJ6GEYJ332	M.RESISTOR CH 1/10W 3.3K	1	
R2402,03	ERJ6GEYJ104	M.RESISTOR CH 1/10W 100K	2	
R2404,05	ERJ6GEYJ473	M.RESISTOR CH 1/10W 47K	2	
R2406	ERJ6GEYJ105	M.RESISTOR CH 1/10W 1M	1	
R2407,08	ERJ6GEYJ473	M.RESISTOR CH 1/10W 47K	2	
R2409	ERJ6GEYJ104	M.RESISTOR CH 1/10W 100K	1	
R2410	ERJ6GEYJ473	M.RESISTOR CH 1/10W 47K	1	
R2411	ERJ6GEY0R00	M.RESISTOR CH 1/10W 0	1	
R2501	ERJ6GEYJ682	M.RESISTOR CH 1/10W 6.8K	1	
R2502	ERJ6GEYJ334	M.RESISTOR CH 1/10W 330K	1	
R2503	ERJ6GEYJ274	M.RESISTOR CH 1/10W 270K	1	
R2504	ERJ6GEYJ123	M.RESISTOR CH 1/10W 12K	1	
R2505	ERJ6GEYJ334	M.RESISTOR CH 1/10W 330K	1	
R2506	ERJ6GEYJ154	M.RESISTOR CH 1/10W 150K	1	
R2507-10	ERJ6GEYG104	M.RESISTOR CH 1/10W 100K	4	
R2511-15	ERJ6GEYJ104	M.RESISTOR CH 1/10W 100K	5	
R2516	ERJ6GEYG393	M.RESISTOR CH 1/10W 39K	1	
R2517	ERJ6GEYG223	M.RESISTOR CH 1/10W 22K	1	
R2518-20	ERJ6GEYG124	M.RESISTOR CH 1/10W 120K	3	
R2521	ERJ6GEYG154	M.RESISTOR CH 1/10W 150K	1	
R2522	ERJ6GEYJ104	M.RESISTOR CH 1/10W 100K	1	
R2523,24	ERJ6GEYJ102	M.RESISTOR CH 1/10W 1K	2	
R2701	ERJ6GEYJ563	M.RESISTOR CH 1/10W 56K	1	
R2709,10	ERJ6GEYJ103	M.RESISTOR CH 1/10W 10K	2	
R2711	ERJ6GEYJ154	M.RESISTOR CH 1/10W 150K	1	

Ref.No.	Part No.	Part Name & Description	Pcs	Remarks
R2712	ERJ6GEYJ104	M.RESISTOR CH 1/10W 100K	1	
R2713	ERJ6GEYJ222	M.RESISTOR CH 1/10W 2.2K	1	
R2714-17	ERJ6GEYJ103	M.RESISTOR CH 1/10W 10K	4	
R2718	ERG2SJ561	M.RESISTOR 2W 560	1	
R2719	ERDS2TJ270	C.RESISTOR 1/4W 27	1	
R2725	ERJ6GEYJ334	M.RESISTOR CH 1/10W 330K	1	
R2727	ERDS2TJ150	C.RESISTOR 1/4W 15	1	
R2729	ERJ6GEYJ102	M.RESISTOR CH 1/10W 1K	1	
R2730	ERDS2TJ182	C.RESISTOR 1/4W 1.8K	1	
R2731	ERJ6GEYJ103	M.RESISTOR CH 1/10W 10K	1	
R2732	ERJ6GEYG153	M.RESISTOR CH 1/10W 15K	1	
R2733	ERDS2TJ182	C.RESISTOR 1/4W 1.8K	1	
R2734	ERDS2TJ391	C.RESISTOR 1/4W 390	1	
R2735	ERJ6GEYJ103	M.RESISTOR CH 1/10W 10K	1	
R2736	ERJ6GEYG153	M.RESISTOR CH 1/10W 15K	1	
R2738,39	ERDS2TJ150	C.RESISTOR 1/4W 15	2	
R2740	ERX12SJR68	M.RESISTOR CH 1/2W 0.68	1	
R2743	ERJ6GEYJ122	M.RESISTOR CH 1/10W 1.2K	1	
R2747	ERJ6GEYJ103	M.RESISTOR CH 1/10W 10K	1	
R2748	ERJ6GEYJ124	M.RESISTOR CH 1/10W 120K	1	
R2751	ERJ6GEYJ102	M.RESISTOR CH 1/10W 1K	1	
R2752-54	ERDS2TJ330	C.RESISTOR 1/4W 33	3	
R2755	ERX12SJR47	M.RESISTOR CH 1/2W 0.47	1	
R2756	ERJ6GEYJ330	M.RESISTOR CH 1/10W 33	1	
R2757	ERJ6GEYJ103	M.RESISTOR CH 1/10W 10K	1	
R2758	ERJ6GEYJ224	M.RESISTOR CH 1/10W 220K	1	
R2759	ERJ6GEYJ223	M.RESISTOR CH 1/10W 22K	1	
R2760	ERJ6GEYJ184	M.RESISTOR CH 1/10W 180K	1	
R2761,62	ERJ6GEYJ103	M.RESISTOR CH 1/10W 10K	2	
R2763,64	ERJ6GEYJ473	M.RESISTOR CH 1/10W 47K	2	
R2765	ERJ6GEYJ103	M.RESISTOR CH 1/10W 10K	1	
R2766	ERJ6GEYJ224	M.RESISTOR CH 1/10W 220K	1	
R2767	ERJ6GEYJ223	M.RESISTOR CH 1/10W 22K	1	
R2768	ERJ6GEYJ184	M.RESISTOR CH 1/10W 180K	1	
R2769,70	ERJ6GEYJ103	M.RESISTOR CH 1/10W 10K	2	
R2771,72	ERJ6GEYJ473	M.RESISTOR CH 1/10W 47K	2	
R2773,74	ERJ6GEYJ103	M.RESISTOR CH 1/10W 10K	2	
R2775	ERJ6GEYJ473	M.RESISTOR CH 1/10W 47K	1	
R2776	ERJ6GEYG472	M.RESISTOR CH 1/10W 4.7K	1	
R2777	ERJ6GEYJ334	M.RESISTOR CH 1/10W 330K	1	
R2778-82	ERJ6GEYJ103	M.RESISTOR CH 1/10W 10K	5	
R2783	ERJ6GEYJ224	M.RESISTOR CH 1/10W 220K	1	
R2784	ERJ6GEYJ103	M.RESISTOR CH 1/10W 10K	1	
R2785	ERJ6GEYJ224	M.RESISTOR CH 1/10W 220K	1	
R2786,87	ERJ6GEYJ103	M.RESISTOR CH 1/10W 10K	2	
R2788	ERJ6GEYJ473	M.RESISTOR CH 1/10W 47K	1	
R2789	ERJ6GEYG472	M.RESISTOR CH 1/10W 4.7K	1	
R2790	ERJ6GEYG333	M.RESISTOR CH 1/10W 33K	1	
R2791	ERJ6GEYJ332	M.RESISTOR CH 1/10W 3.3K	1	
R2792	ERJ6GEYJ103	M.RESISTOR CH 1/10W 10K	1	
R2793	ERJ6GEYJ473	M.RESISTOR CH 1/10W 47K	1	
R2794	ERJ6GEYG472	M.RESISTOR CH 1/10W 4.7K	1	
R2795	ERJ6GEYG333	M.RESISTOR CH 1/10W 33K	1	
R2796	ERJ6GEYJ332	M.RESISTOR CH 1/10W 3.3K	1	
R2799,00	ERJ6GEY0R00	M.RESISTOR CH 1/10W 0	2	
R2803	ERG2SJ221	M.RESISTOR 2W 220	1	
R2821	ERDS2TJ682	C.RESISTOR 1/4W 6.8K	1	
R2828,29	ERJ6GEYJ104	M.RESISTOR CH 1/10W 100K	2	
R2830	ERDS2TJ391	C.RESISTOR 1/4W 390	1	
R2831	ERDS2TJ561	C.RESISTOR 1/4W 560	1	
R2832	ERDS2TJ562	C.RESISTOR 1/4W 5.6K	1	
R2833	ERDS2TJ391	C.RESISTOR 1/4W 390	1	
R2834	ERDS2TJ182	C.RESISTOR 1/4W 1.8K	1	
R2835	ERJ6GEYJ471	M.RESISTOR CH 1/10W 470	1	
R2836	ERJ6GEYJ103	M.RESISTOR CH 1/10W 10K	1	
R2838,39	ERJ6GEYJ103	M.RESISTOR CH 1/10W 10K	2	
R2840	ERJ6GEYJ222	M.RESISTOR CH 1/10W 2.2K	1	
R2841	ERJ6GEYJ104	M.RESISTOR CH 1/10W 100K	1	
R2842,43	ERJ6GEYJ103	M.RESISTOR CH 1/10W 10K	2	
R2844	ERJ6GEYJ222	M.RESISTOR CH 1/10W 2.2K	1	
R2845	ERJ6GEYJ104	M.RESISTOR CH 1/10W 100K	1	
R2846-48	ERJ6GEYJ271	M.RESISTOR CH 1/10W 270	3	
R2849	ERJ6GEY0R00	M.RESISTOR CH 1/10W 0	1	
R2850	ERDS2TJ102	C.RESISTOR 1/4W 1K	1	
R2862,63	ERJ6GEYJ332	M.RESISTOR CH 1/10W 3.3K	2	

Ref.No.	Part No.	Part Name & Description	Pcs	Remarks
R60001	ERJ6GEYJ103	M.RESISTOR CH 1/10W 10K	1	
R60002	ERD2FCG220	C.RESISTOR 2W 22	1	<!>
R60003	ERJ6GEYJ103	M.RESISTOR CH 1/10W 10K	1	
R60004	ERJ6GEYJ183	M.RESISTOR CH 1/10W 18K	1	
R60005	ERJ6GEYJ272	M.RESISTOR CH 1/10W 2.7K	1	
R60006	ERJ6GEYJ103	M.RESISTOR CH 1/10W 10K	1	
R60007	ERJ6GEYJ272	M.RESISTOR CH 1/10W 2.7K	1	
R60008	ERJ6GEYJ103	M.RESISTOR CH 1/10W 10K	1	
R60009	ERJ6GEYJ183	M.RESISTOR CH 1/10W 18K	1	
R60010	ERJ6GEYJ471	M.RESISTOR CH 1/10W 470	1	
R60011	ERJ6GEYJ104	M.RESISTOR CH 1/10W 100K	1	
R60012	ERJ6GEYJ473	M.RESISTOR CH 1/10W 47K	1	
R60013	ERJ6GEYJ471	M.RESISTOR CH 1/10W 470	1	
R60015	ERJ6GEYJ103	M.RESISTOR CH 1/10W 10K	1	
R60016	ERJ6GEYJ272	M.RESISTOR CH 1/10W 2.7K	1	
R60017,18	ERJ6GEYJ103	M.RESISTOR CH 1/10W 10K	2	
R60019	ERDS2TJ472	C.RESISTOR 1/4W 4.7K	1	
R60020	ERDS2TJ471	C.RESISTOR 1/4W 470	1	
R60021-24	ERJ6GEYJ103	M.RESISTOR CH 1/10W 10K	4	
R60025	ERDS2TJ333	C.RESISTOR 1/4W 33K	1	
R60026-29	ERJ6GEYJ103	M.RESISTOR CH 1/10W 10K	4	
R60030	ERJ6GEYJ102	M.RESISTOR CH 1/10W 1K	1	
R60031	ERJ6GEYJ103	M.RESISTOR CH 1/10W 10K	1	
R60032-35	ERJ6GEYJ473	M.RESISTOR CH 1/10W 47K	4	
R60037	ERD2FCJ4R7	C.RESISTOR 2W 4.7	1	<!>
R60038	ERJ6GEYJ103	M.RESISTOR CH 1/10W 10K	1	
R60039	ERJ6GEYJ473	M.RESISTOR CH 1/10W 47K	1	
R60040	ERJ6GEYJ101	M.RESISTOR CH 1/10W 100	1	
R60043,44	ERJ6GEYG472	M.RESISTOR CH 1/10W 4.7K	2	
R60045	ERJ6GEYJ103	M.RESISTOR CH 1/10W 10K	1	
R60047	ERG1SJ330	M.RESISTOR 1W 33	1	
R60048,49	ERJ6GEYJ101	M.RESISTOR CH 1/10W 100	2	
R60050	ERJ6GEY0R00	M.RESISTOR CH 1/10W 0	1	
R60055	ERJ6GEYJ103	M.RESISTOR CH 1/10W 10K	1	
R60056	ERJ6GEYJ473	M.RESISTOR CH 1/10W 47K	1	
R60057	ERJ6GEYJ822	M.RESISTOR CH 1/10W 8.2K	1	
R60058	ERJ6GEYJ393	M.RESISTOR CH 1/10W 39K	1	
R60059	ERJ6GEYJ103	M.RESISTOR CH 1/10W 10K	1	
R60060	ERJ6GEYJ684	M.RESISTOR CH 1/10W 680K	1	
R60101	ERJ6GEYG102	M.RESISTOR CH 1/10W 1K	1	
R60102	ERJ6GEYG302	M.RESISTOR CH 1/10W 3K	1	
R60103-05	ERJ6GEYG102	M.RESISTOR CH 1/10W 1K	3	
R60106	ERJ6GEYJ273	M.RESISTOR CH 1/10W 27K	1	
R60107	ERJ6GEYJ823	M.RESISTOR CH 1/10W 82K	1	
R60108-11	ERJ6GEYJ103	M.RESISTOR CH 1/10W 10K	4	
R60501	ERJ6GEYJ222	M.RESISTOR CH 1/10W 2.2K	1	
R60502,03	ERJ6GEYG153	M.RESISTOR CH 1/10W 15K	2	
R60504	ERJ6GEYJ181	M.RESISTOR CH 1/10W 180	1	
R60505	ERJ6GEYJ122	M.RESISTOR CH 1/10W 1.2K	1	
R60506	ERJ6GEYJ182	M.RESISTOR CH 1/10W 1.8K	1	
R60507,08	ERJ6GEYJ222	M.RESISTOR CH 1/10W 2.2K	2	
R60509	ERJ6GEYJ681	M.RESISTOR CH 1/10W 680	1	
R60510,11	ERJ6GEYJ272	M.RESISTOR CH 1/10W 2.7K	2	
R60512	ERJ6GEYJ102	M.RESISTOR CH 1/10W 1K	1	
R60513	ERJ6GEYJ121	M.RESISTOR CH 1/10W 120	1	
R60514	ERJ6GEYJ183	M.RESISTOR CH 1/10W 18K	1	
R60515	ERJ6GEYJ474	M.RESISTOR CH 1/10W 470K	1	
R60516	ERJ6GEYJ682	M.RESISTOR CH 1/10W 6.8K	1	
R60517,18	ERJ6GEYJ821	M.RESISTOR CH 1/10W 820	2	
R60519	ERJ6GEYJ181	M.RESISTOR CH 1/10W 180	1	
R60520,21	ERJ6GEYJ682	M.RESISTOR CH 1/10W 6.8K	2	
R60522	ERJ6GEYJ562	M.RESISTOR CH 1/10W 5.6K	1	
R60523	ERJ6GEYJ332	M.RESISTOR CH 1/10W 3.3K	1	
R60524	ERJ6GEYJ103	M.RESISTOR CH 1/10W 10K	1	
R60525	ERDS2TJ151	C.RESISTOR 1/4W 150	1	
R60526	ERJ6GEYJ683	M.RESISTOR CH 1/10W 68K	1	
R60527,28	ERG1SJ300	M.RESISTOR 1W 30	2	
R60529	ERJ6GEYJ682	M.RESISTOR CH 1/10W 6.8K	1	
R60530	ERJ6GEYJ473	M.RESISTOR CH 1/10W 47K	1	
T1501	ETE13K86AY	TRANSFORMER	1	
T60001	EIQ7QF002B	TRANSFORMER	1	

Ref.No.	Part No.	Part Name & Description	Pcs	Remarks
VR2001	EVN32CA00B54	V.RESISTOR 50K	1	
VR2003	EVN32CA00B15	V.RESISTOR 100K	1	
X2001	VSX0296	CRYSTAL OSCILLATOR	1	<R>
X2002	VSX0066	CRYSTAL OSCILLATOR	1	<R>
X2201	VSX0197	CRYSTAL OSCILLATOR	1	<R>
X2401	VSX0086	CRYSTAL OSCILLATOR	1	<R>
X2701	VSX0136	CRYSTAL OSCILLATOR	1	<R>
X60001	VSX0230	CRYSTAL OSCILLATOR	1	<R>
		MISCELLANEOUS		
E43	VMX0985	SPACER	2	
E52	XYN3+F8	SCREW	2	
E80	VSC4042	HEAT SINK	2	
E82	VMC0493	HEAT SINK SPRING	1	
E84	VMC0075	HEAT SINK SPRING	1	
E83	VSC1215	HEAT SINK	1	
E42	VJF0816	CORD CLAMPER	1	
	VWJ18AW105M1	FLEXIBLE WIRE	1	
	VWJ04CN150CA	FLAT CABLE	1	
E81	VSC1689	HEAT SINK	1	

Ref.No.		Part No.	Part Name & Description	Pcs	Remarks
		VEP06904F	P.C.BOARD W/COMPONENT		AG-8600E
			SERVO & SYSCON		
C1501		ECEA1VGE220	E.CAPACITOR 35V 220U	1	
C1502		ECQV1H104JZ	P.CAPACITOR 50V 0.1U	1	
C1503		ECEA1DPS681	E.CAPACITOR 20V 680U	1	
C1504		ECQV1H104JZ	P.CAPACITOR 50V 0.1U	1	
C1505		ECEA1AGE221	E.CAPACITOR 10V 220U	1	
C1506		ECEA1CU101	E.CAPACITOR 16V 100U	1	
C1507		ECUM1H103ZFN	C.CAPACITOR 50V 0.01U	1	
C1508		ECQV1H104JZ	P.CAPACITOR 50V 0.1U	1	
C1509,10		ECEA1CU101	E.CAPACITOR 16V 100U	2	
C1511		ECEA1HU4R7	E.CAPACITOR 50V 4.7U	1	
C1512		ECEA1CU101	E.CAPACITOR 16V 100U	1	
C1513		ECQB1H103JF	P.CAPACITOR 50V 0.01U	1	
C1514		ECQB1H473JF	P.CAPACITOR 50V 0.047U	1	
C1515		ECUM1H223KBN	C.CAPACITOR 50V 0.022U	1	
C1517		ECEA1AU221	E.CAPACITOR 10V 220U	1	
C1518		ECEA1VU100	E.CAPACITOR 35V 10U	1	
C1519		ECEA1EGE470	E.CAPACITOR 25V 47U	1	
C1520		ECEA1EGE221	E.CAPACITOR 25V 220U	1	
C1521		ECEA1EGE470	E.CAPACITOR 25V 47U	1	
C1522		ECEA1CGE102	E.CAPACITOR 16V 1000U	1	
C1523		ECEA1EGE470	E.CAPACITOR 25V 47U	1	
C1524		ECEA1EGE221	E.CAPACITOR 25V 220U	1	
C1525		ECEA1AGE101	E.CAPACITOR 10V 100U	1	
C1526		ECEA1AGE471	E.CAPACOTOR 10V 47U	1	
C1527		ECEA1EGE221	E.CAPACITOR 25V 220U	1	
C1529		ECEA1EGE471	E.CAPACITOR 25V 470U	1	
C1530		ECEA1VGE220	E.CAPACITOR 35V 220U	1	
C1531		ECA0JFQ102	E.CAPACITOR 6.3V 1000U	1	
C1532		ECEA1AGE221	E.CAPACITOR 10V 220U	1	
C1533		ECUM1H103ZFN	C.CAPACITOR 50V 0.01U	1	
C1534		ECEA1EGE221	E.CAPACITOR 25V 220U	1	
C1541		ECEA1AGE101	E.CAPACITOR 10V 100U	1	
C1542		ECUM1H103KBN	C.CAPACITOR CH 50V 0.01U	1	
C2001		ECEA0JU470	E.CAPACITOR 6.3V 47U	1	
C2002		ECUM1H150JCN	C.CAPACITOR CH 50V 15P	1	
C2003		ECUM1H181JCN	C.CAPACITOR CH 50V 180P	1	
C2004		ECUM1H101JCN	C.CAPACITOR CH 50V 100P	1	
C2005		ECUM1H103ZFN	C.CAPACITOR 50V 0.01U	1	
C2006		ECUM1E104ZFN	C.CAPACITOR CH 25V 0.1U	1	
C2007		ECEA1AU330	E.CAPACITOR 10V 33U	1	
C2008		ECQB1H683JF	P.CAPACITOR 50V 0.068U	1	
C2009		ECUM1H103ZFN	C.CAPACITOR 50V 0.01U	1	
C2010		ECEA0JU470	E.CAPACITOR 6.3V 47U	1	
C2011		ECEA1AU220	E.CAPACITOR 10V 22U	1	
C2012		ECEA1CU470	E.CAPACITOR 16V 47U	1	
C2013-15		ECUM1H103ZFN	C.CAPACITOR 50V 0.01U	3	
C2016,17		ECEA0JU470	E.CAPACITOR 6.3V 47U	2	
C2018		ECUM1H103ZFN	C.CAPACITOR 50V 0.01U	1	
C2019		ECEA0JU470	E.CAPACITOR 6.3V 47U	1	
C2020		ECUM1H103ZFN	C.CAPACITOR 50V 0.01U	1	
C2021		ECQB1H152JF	P.CAPACITOR 50V 1500P	1	
C2022		ECUM1H103ZFN	C.CAPACITOR 50V 0.01U	1	
C2023		ECQV1H184JZ	P.CAPACITOR 50V 0.18U	1	
C2025		ECUM1H103ZFN	C.CAPACITOR 50V 0.01U	1	
C2027		ECEA0JU470	E.CAPACITOR 6.3V 47U	1	
C2028		ECUM1H103ZFN	C.CAPACITOR 50V 0.01U	1	
C2029		ECUM1H330JCN	C.CAPACITOR CH 50V 33P	1	
C2030		ECUM1H220JCN	C.CAPACITOR CH 50V 22P	1	
C2031		ECUM1H100DCN	C.CAPACITOR CH 50V 10P	1	
C2032		ECEA0JU470	E.CAPACITOR 6.3V 47U	1	
C2033,34		ECEA1CU100	E.CAPACITOR 16V 10U	2	
C2035		ECEA1HUR47	E.CAPACITOR 50V 0.47U	1	
C2044,45		ECUM1H271JCN	C.CAPACITOR CH 50V 270P	2	
C2047		ECUM1E104ZFN	C.CAPACITOR CH 25V 0.1U	1	
C2050		ECUM1H103ZFN	C.CAPACITOR 50V 0.01U	1	
C2201		ECEA0JGE470	E.CAPACITOR 6.3V 47U	1	
C2202,03		ECUM1H103ZFN	C.CAPACITOR 50V 0.01U	2	
C2204,05		ECUM1H220JCN	C.CAPACITOR CH 50V 22P	2	
C2206		ECEA0JU470	E.CAPACITOR 6.3V 47U	1	

Ref.No.		Part No.	Part Name & Description	Pcs	Remarks
C2207,08		ECUM1H103ZFN	C.CAPACITOR 50V 0.01U	2	
C2209,10		ECUM1H220JCN	C.CAPACITOR CH 50V 22P	2	
C2214		ECUM1H101JCN	C.CAPACITOR CH 50V 100P	1	
C2215		ECUM1H103ZFN	C.CAPACITOR 50V 0.01U	1	
C2216		ECEA0JU470	E.CAPACITOR 6.3V 47U	1	
C2217,18		ECUM1H103ZFN	C.CAPACITOR 50V 0.01U	2	
C2219		ECEA0JU470	E.CAPACITOR 6.3V 47U	1	
C2220,21		ECUM1H103ZFN	C.CAPACITOR 50V 0.01U	2	
C2222		ECEA0JU470	E.CAPACITOR 6.3V 47U	1	
C2223,24		ECUM1H103ZFN	C.CAPACITOR 50V 0.01U	2	
C2225		ECEA0JU470	E.CAPACITOR 6.3V 47U	1	
C2226		ECUM1H103ZFN	C.CAPACITOR 50V 0.01U	1	
C2227		ECEA0JU470	E.CAPACITOR 6.3V 47U	1	
C2228-30		ECUM1H103ZFN	C.CAPACITOR 50V 0.01U	3	
C2231		ECEA0JU470	E.CAPACITOR 6.3V 47U	1	
C2232-34		ECUM1H103ZFN	C.CAPACITOR 50V 0.01U	3	
C2235		ECUM1H820JCN	C.CAPACITOR CH 50V 82P	1	
C2236		ECQB1H333JF	P.CAPACITOR 50V 0.033U	1	
C2237,38		ECEA0JU470	E.CAPACITOR 6.3V 47U	2	
C2239-41		ECUM1H103ZFN	C.CAPACITOR 50V 0.01U	3	
C2243		ECUM1H103ZFN	C.CAPACITOR 50V 0.01U	1	
C2244		ECEA1CU100	E.CAPACITOR 16V 10U	1	
C2245-47		ECUM1H103ZFN	C.CAPACITOR 50V 0.01U	3	
C2318,19		ECEA0JU470	E.CAPACITOR 6.3V 47U	2	
C2320		ECUM1H222KBN	C.CAPACITOR CH 50V 2200P	1	
C2321		ECUM1H103ZFN	C.CAPACITOR 50V 0.01U	1	
C2322		ECEA1HN4R7S	E.CAPACITOR 50V 4.7U	1	
C2323		ECUM1H561JCN	C.CAPACITOR CH 50V 560P	1	
C2327,28		ECEA0JU470	E.CAPACITOR 6.3V 47U	2	
C2330		ECQP1H103JZ	P.CAPACITOR 50V 0.01U	1	
C2331		ECQB1H104JF	P.CAPACITOR 50V 0.1U	1	
C2335,36		ECEA0JU470	E.CAPACITOR 6.3V 47U	2	
C2338		ECQB1H103JF	P.CAPACITOR 50V 0.01U	1	
C2339		ECUM1H331JCN	C.CAPACITOR CH 50V 330P	1	
C2340-42		ECUM1H103ZFN	C.CAPACITOR 50V 0.01U	3	
C2401,02		ECUM1H103ZFN	C.CAPACITOR 50V 0.01U	2	
C2403		ECEA1CU470	E.CAPACITOR 16V 47U	1	
C2404,05		ECUM1H330JCN	C.CAPACITOR CH 50V 33P	2	
C2406-09		ECUM1H103ZFN	C.CAPACITOR 50V 0.01U	4	
C2410		ECEA0JU470	E.CAPACITOR 6.3V 47U	1	
C2501		ECQB1H473JF	P.CAPACITOR 50V 0.047U	1	
C2502		ECQB1H222JF	P.CAPACITOR 50V 2200P	1	
C2503		ECQB1H273JF	P.CAPACITOR 50V 0.027U	1	
C2504		ECQB1H222JF	P.CAPACITOR 50V 2200P	1	
C2510		ECEA1CU470	E.CAPACITOR 16V 47U	1	
C2512-14		ECUM1H103ZFN	C.CAPACITOR 50V 0.01U	3	
C2516-19		ECUM1H103ZFN	C.CAPACITOR 50V 0.01U	4	
C2701		ECEA1CU101	E.CAPACITOR 16V 100U	1	
C2702		ECUM1H820JCN	C.CAPACITOR CH 50V 82P	1	
C2703		ECUM1H561JCN	C.CAPACITOR CH 50V 560P	1	
C2704		ECUM1H271JCN	C.CAPACITOR CH 50V 270P	1	
C2705		ECEA1HU010	E.CAPACITOR 50V 1U	1	
C2709		ECEA1HU010	E.CAPACITOR 50V 1U	1	
C2710		ECUM1H103ZFN	C.CAPACITOR 50V 0.01U	1	
C2711		ECQB1H222JF	P.CAPACITOR 50V 2200P	1	
C2712		ECEA1EU221	E.CAPACITOR 25V 220U	1	
C2714		ECQV1H474JZ	P.CAPACITOR 50V 0.47U	1	
C2716,17		ECEA1EU101	E.CAPACITOR 25V 100U	2	
C2718		ECQV1H474JZ	P.CAPACITOR 50V 0.47U	1	
C2722		ECUM1H102JN	C.CAPACITOR CH 50V 1000P	1	
C2723		ECEA1EU221	E.CAPACITOR 25V 220U	1	
C2724		ECUM1H102JN	C.CAPACITOR CH 50V 1000P	1	
C2725		ECEA1EU221	E.CAPACITOR 25V 220U	1	
C2726		ECEA0JU470	E.CAPACITOR 6.3V 47U	1	
C2727-30		ECQV1H104JZ	P.CAPACITOR 50V 0.1U	4	
C2731-33		ECEA1HN4R7S	E.CAPACITOR 50V 4.7U	3	
C2734		ECQB1H473JF	P.CAPACITOR 50V 0.047U	1	
C2735		ECEA0JU470	E.CAPACITOR 6.3V 47U	1	
C2736		ECQB1H683JF	P.CAPACITOR 50V 0.068U	1	
C2737		ECUM1H103ZFN	C.CAPACITOR 50V 0.01U	1	
C2738		ECEA1CU470	E.CAPACITOR 16V 47U	1	
C2739		ECEA0JU470	E.CAPACITOR 6.3V 47U	1	
C2740		ECEA1EU470	E.CAPACITOR 25V 47U	1	
C2741		ECUM1H333KBN	C.CAPACITOR CH 50V 0.033U	1	
C2742		ECQB1H104JF	P.CAPACITOR 50V 0.1U	1	

Ref.No.		Part No.	Part Name & Description	Pcs	Remarks
C2744-46		ECEA1HU2R2	E.CAPACITOR 50V 2.2U	3	
C2747-50		ECUM1H333KBN	C.CAPACITOR CH 50V 0.033U	4	
C2751-53		ECUM1H103ZFN	C.CAPACITOR 50V 0.01U	3	
C2754		ECEA0JU470	E.CAPACITOR 6.3V 47U	1	
C2755-57		ECUM1H102JN	C.CAPACITOR CH 50V 1000P	3	
C2758		ECEA1HNR47S	E.CAPACITOR 50V 0.47U	1	
C2759		ECUM1H221JCN	C.CAPACITOR CH 50V 220P	1	
C2760		ECEA1HN2R2S	E.CAPACITOR 50V 2.2U	1	
C2761		ECUM1H101JCN	C.CAPACITOR CH 50V 100P	1	
C2762		ECEA1HU2R2	E.CAPACITOR 50V 2.2U	1	
C2763		ECEA0JU470	E.CAPACITOR 6.3V 47U	1	
C2764		ECEA0JU220	E.CAPACITOR 6.3V 22U	1	
C2765		ECUM1H221JCN	C.CAPACITOR CH 50V 220P	1	
C2766		ECEA1HN2R2S	E.CAPACITOR 50V 2.2U	1	
C2767		ECUM1H101JCN	C.CAPACITOR CH 50V 100P	1	
C2768		ECEA1HU2R2	E.CAPACITOR 50V 2.2U	1	
C2769,70		ECUM1H102JN	C.CAPACITOR CH 50V 1000P	2	
C2793		ECEA1HU4R7	E.CAPACITOR 50V 4.7U	1	
C2804,05		ECEA1EU472	E.CAPACITOR 25V 4700U	2	
C2806		ECEA1HU4R7	E.CAPACITOR 50V 4.7U	1	
C60001		ECUM1H103ZFN	C.CAPACITOR 50V 0.01U	1	
C60002,03		ECEA1CU102	E.CAPACITOR 16V 1000U	2	
C60005		ECEA0JU332	E.CAPACITOR 6.3V 3300U	1	
C60006		ECUM1H103ZFN	C.CAPACITOR 50V 0.01U	1	
C60007		ECEA1HU010	E.CAPACITOR 50V 1U	1	
C60008		ECEA0JU470	E.CAPACITOR 6.3V 47U	1	
C60009		ECEA0JU332	E.CAPACITOR 6.3V 3300U	1	
C60016		ECUM1H221JCN	C.CAPACITOR CH 50V 220P	1	
C60018,19		ECUM1H330JCN	C.CAPACITOR CH 50V 33P	2	
C60020		ECEA1HU010	E.CAPACITOR 50V 1U	1	
C60021		ECEA1HU4R7	E.CAPACITOR 50V 4.7U	1	
C60022		ECEA1AU220	E.CAPACITOR 10V 22U	1	
C60023		ECUM1E104ZFN	C.CAPACITOR CH 25V 0.1U	1	
C60024		ECEA0JU682	E.CAPACITOR 6.3V 6800U	1	
C60026		ECUM1H104ZFN	C.CAPACITOR 50V 0.1U	1	
C60027		ECUM1H103ZFN	C.CAPACITOR 50V 0.01U	1	
C60101		ECUM1H103ZFN	C.CAPACITOR 50V 0.01U	1	
C60102		ECEA1CU470	E.CAPACITOR 16V 47U	1	
C60103-06		ECQB1H102JF	P.CAPACITOR 50V 1000P	4	
C60107		ECUM1H151JCN	C.CAPACITOR CH 50V 150P	1	
C60108		ECEA1CU221	E.CAPACITOR 16V 220U	1	
C60109		ECUM1H103ZFN	C.CAPACITOR 50V 0.01U	1	
C60110,11		ECEA1CU100	E.CAPACITOR 16V 10U	2	
C60112		ECEA1CU470	E.CAPACITOR 16V 47U	1	
C60501		ECEA1EU4R7	E.CAPACITOR 25V 4.7U	1	
C60502		ECQB1H104JF	P.CAPACITOR 50V 0.1U	1	
C60503		ECEA1HN010S	E.CAPACITOR 50V 1U	1	
C60504		ECUM1H103ZFN	C.CAPACITOR 50V 0.01U	1	
C60505		ECEA1EN101S	E.CAPACITOR 25V 100U	1	
C60506		ECEA1CU101	E.CAPACITOR 16V 100U	1	
C60507		ECEA0JU470	E.CAPACITOR 6.3V 47U	1	
C60508,09		ECUM1H101JCN	C.CAPACITOR CH 50V 100P	2	
D1502-04		MA151K	DIODE	3	<R>
D1505		MA701A	DIODE	1	<R>
D1507		MA151K	DIODE	1	<R>
D1508		MA3020	DIODE	1	<R>
D1509		8P2M	DIODE	1	<R>
D1510		MA165VT	DIODE	1	<R>
D1511		MA151K	DIODE	1	<R>
D1512		VSD0002	DIODE	1	<R>
D1513		AK04	DIODE	1	<R>
D1514		MA1270-M	DIODE	1	<R>
D1515		MA185	DIODE	1	<R>
D1516		MA4075M	DIODE	1	<R>
D1517		MA4130M	DIODE	1	<R>
D1518		MA4120-M	DIODE	1	<R>
D1519,20		MA151K	DIODE	2	<R>
D1522		MA3160-L	DIODE	1	<R>
D1523		11EQS04	DIODE	1	<R>
D1524		MA4047M	DIODE	1	<R>
D1525,26		MA723VT	DIODE	2	<R>
D1528		MA4056M	DIODE	1	<R>

Ref.No.		Part No.	Part Name & Description	Pcs	Remarks
D1529		MA165VT	DIODE	1	<R>
D1530		MA4075M	DIODE	1	<R>
D1531		MA151K	DIODE	1	<R>
D1532		MA3068M	DIODE	1	<R>
D1541		MA3091-M	DIODE	1	<R>
D1542		MA4039	DIODE	1	<R>
D1543,44		MA151K	DIODE	2	<R>
D2002		MA151WA	DIODE	1	<R>
D2003		MA151K	DIODE	1	<R>
D2006		MA151WA	DIODE	1	<R>
D2007,08		MA151K	DIODE	2	<R>
D2308		MA151K	DIODE	1	<R>
D2309		MA151WK	DIODE	1	<R>
D2401		MA151K	DIODE	1	<R>
D2501,02		MA151K	DIODE	2	<R>
D2701		MA4180-L	DIODE	1	<R>
D2703		MA4160-L	DIODE	1	<R>
D2704		11DQ04	DIODE	1	<R>
D2705		MA151K	DIODE	1	<R>
D2715,16		11DQ04	DIODE	2	<R>
D2717-19		11EQS04	DIODE	3	<R>
D2720		MA153	DIODE	1	<R>
D2721		11EQS04	DIODE	1	<R>
D2722		MA153	DIODE	1	<R>
D2723		11EQS04	DIODE	1	<R>
D2727		11EQS04	DIODE	1	<R>
D2734,35		MA4160-L	DIODE	2	<R>
D2736-38		MA4160-M	DIODE	3	<R>
D2741,42		MA4062M	DIODE	2	<R>
D2743		MA723VT	DIODE	1	<R>
D60001		11EQS04	DIODE	1	<R>
D60002		MA170	DIODE	1	<R>
D60003-06		11EQS04	DIODE	4	<R>
D60008		MA3043-M	DIODE	1	<R>
D60009		11ES1	DIODE	1	<R>
D60501,02		MA151K	DIODE	2	<R>
D60503		10E1	DIODE	1	<R>
D60504		MA151K	DIODE	1	<R>
D60505		MA170	DIODE	1	<R>
D60506		MA151K	DIODE	1	<R>
FA2202		VLF1036D101	FILTER	1	
FL2201-06		VLF0634	FILTER	6	
IC1501		LM393PS	IC	1	<R>
IC1502		AN7912F	IC	1	<R>
IC1503		AN7905F	IC	1	<R>
IC1505,06		TL431CLP	IC	2	<R>
IC2001		MN6742VMEP	IC	1	<R>
IC2002		MN1382-R	IC	1	
IC2003		BA226F	IC	1	<R>
IC2004		MC14052BF	IC	1	<R>
IC2006		TC4S30F	IC	1	<R>
IC2007,08		MN53015VZW	IC	2	<R>
IC2009		TC4W53F	IC	1	<R>
IC2010		LM339NS	IC	1	<R>
IC2012		MC74HCU04F	IC	1	<R>
IC2013		LM358PS	IC	1	<R>
IC2014		TC7S32F	IC	1	<R>
IC2201		MN19041VMCX	IC	1	<R>
IC2202		L7A0269	IC	1	<R>
IC2203		PCM55HP	IC	1	<R>
IC2206		MC14050BF	IC	1	<R>
IC2207		LM358PS	IC	1	<R>
IC2302		NJM4556MB	IC	1	<R>
IC2303		LM358PS	IC	1	<R>
IC2304		LM393PS	IC	1	<R>
IC2305		MC14053BF	IC	1	<R>

MC-Service

Ref.No.	Part No.	Part Name & Description	Pcs	Remarks
IC2310	BA6302AF	IC	1	<R>
IC2401	MC14013BF	IC	1	<R>
IC2402	TC4W53F	IC	1	<R>
IC2406	M50927-531SP	IC	1	<R>
IC2501,02	LM324NS	IC	2	<R>
IC2503	LM393PS	IC	1	<R>
IC2505	MC14053BF	IC	1	<R>
IC2506	MC14052BF	IC	1	<R>
IC2507	MC14053BF	IC	1	<R>
IC2701	BA6149LS	IC	1	<R>
IC2703	AN3815K	IC	1	<R>
IC2704	XRA6435S	IC	1	<R>
IC2705	LM393PS	IC	1	<R>
IC2706	LM358PS	IC	1	<R>
IC2707	LM393PS	IC	1	<R>
IC2708	LM358PS	IC	1	<R>
IC2709	LM393PS	IC	1	<R>
IC2710,11	UPC4556G2	IC	2	<R>
IC2715	AN78N12	IC	1	<R>
IC60001	TD62503F	IC	1	<R>
IC60002	MN188166VCTG	IC	1	<R>
IC60003	MN1382-R	IC	1	
IC60101	LM324NS	IC	1	<R>
IC60501	LM393PS	IC	1	<R>
IC60502	M54649L	IC	1	<R>
IC60503	MN1382-R	IC	1	
J2002-04	ERJ6GEY0R00	M.RESISTOR CH 1/10W 0	3	
J2202	ERJ6GEY0R00	M.RESISTOR CH 1/10W 0	1	
J2204,05	ERJ6GEY0R00	M.RESISTOR CH 1/10W 0	2	
J2207-12	ERJ6GEY0R00	M.RESISTOR CH 1/10W 0	6	
J60001	ERJ6GEY0R00	M.RESISTOR CH 1/10W 0	1	
J60003	ERJ6GEY0R00	M.RESISTOR CH 1/10W 0	1	
J60005,06	ERJ6GEY0R00	M.RESISTOR CH 1/10W 0	2	
K1501	ERJ6GEY0R00	M.RESISTOR CH 1/10W 0	1	
K1502	ERDS2T0	C.RESISTOR 1/4W 0	1	
L1501	VLQEL06R101K	COIL	1	
L1502,03	VLP0074	COIL	2	
L2001,02	VLQEL05S470J	COIL 47UH	2	
L2004-06	VLQEL05S470J	COIL 47UH	3	
L2007	VLP0054	COIL	1	
L2008	VLQEL05S470J	COIL 47UH	1	
L2201,02	VLQEL05S2R2K	COIL 2.2UH	2	
L2203-05	VLP0054	COIL	3	
L2206,07	VLQEL05S2R2K	COIL 2.2UH	2	
L2208	VLQEL05S470J	COIL 47UH	1	
L2301-03	VLQEL05S470J	COIL 47UH	3	
L2401	VLQEL05S470J	COIL 47UH	1	
L2502	VLQEL05S470J	COIL 47UH	1	
L2701	VLQ0128	COIL 47UH	1	
L2702-04	VLQ0129	COIL 300UH	3	
L2705	VLQEL05S470J	COIL 47UH	1	
L2707	VLQEL05S470J	COIL 47UH	1	
L2711	VLQEL05S470J	COIL 47UH	1	
L60002	VLQEL05S470J	COIL 47UH	1	
L60501	VLQEL05S150K	COIL 15UH	1	
P1501	VJP1146	CONNECTOR	1	
P1502	VJP3076	CONNECTOR	1	
P1503	VJP1147	CONNECTOR (MALE) 12P	1	
P2201-03	VJS3202B020Z	CONNECTOR (FEMALE) 20P	3	
P2301	VJP1230T	CONNECTOR (MALE) 3P	1	
P2701	VJP3078	CONNECTOR (MALE)	1	
P2702	VJP3083	CONNECTOR (MALE)	1	
P2703	VJS2149W	CONNECTOR (FEMALE)	1	

Ref.No.	Part No.	Part Name & Description	Pcs	Remarks
P60003	VJS3135	CONNECTOR (FEMALE)	1	
P60501	VJS2149W	CONNECTOR (FEMALE)	1	
P60502	VJP1230T	CONNECTOR (MALE) 3P	1	
P60503	VJS3134	CONNECTOR	1	
Q1501	2SD1474	TRANSISTOR	1	<R>
Q1502	2SD973A-R	TRANSISTOR	1	<R>
Q1503	2SD1474	TRANSISTOR	1	<R>
Q1504	2SD1273	TRANSISTOR	1	<R>
Q1505	2SD973A	TRANSISTOR	1	<R>
Q2001	MSC2295-B	TRANSISTOR	1	<R>
Q2303-05	MSD601-R	TRANSISTOR	3	<R>
Q2703	MSB709-R	TRANSISTOR	1	<R>
Q2704	2SB1151	TRANSISTOR	1	<R>
Q2705-07	2SD601A-R	TRANSISTOR	3	<R>
Q2709-11	2SB772	TRANSISTOR	3	<R>
Q2713-16	MSB709-R	TRANSISTOR	4	<R>
Q60001	2SD638	TRANSISTOR	1	<R>
Q60002	MSB709-R	TRANSISTOR	1	<R>
Q60003	2SB819	TRANSISTOR	1	<R>
Q60004	MSD601-R	TRANSISTOR	1	<R>
Q60005	2SB819	TRANSISTOR	1	<R>
Q60006	MSD601-R	TRANSISTOR	1	<R>
Q60007	MSD602-R	TRANSISTOR	1	<R>
Q60501-03	MSD601-R	TRANSISTOR	3	<R>
Q60504	2SB819	TRANSISTOR	1	<R>
Q60505	MSD601-R	TRANSISTOR	1	<R>
Q60506	2SD1273-Q	TRANSISTOR	1	<R>
Q60507	MSD601-R	TRANSISTOR	1	<R>
Q60508	2SB941	TRANSISTOR	1	<R>
Q60509	MSD601-R	TRANSISTOR	1	<R>
QR1502	MRN2402	TRANSISTOR	1	<R>
QR1503	MRN1402	TRANSISTOR	1	<R>
QR1541	UN2219	TRANSISTOR	1	<R>
QR2005	MRN1404	TRANSISTOR	1	<R>
QR2304,05	MRN2402	TRANSISTOR	2	<R>
QR2306	MRN1404	TRANSISTOR	1	<R>
QR2308	MRN1404	TRANSISTOR	1	<R>
QR2309	MRN2404	TRANSISTOR	1	<R>
QR2402	MRN2404	TRANSISTOR	1	<R>
QR2501-05	MRN1404	TRANSISTOR	5	<R>
QR2701	MRN1404	TRANSISTOR	1	<R>
QR2702	MRN2404	TRANSISTOR	1	<R>
QR2703	MRN1404	TRANSISTOR	1	<R>
QR2704	MRN1403	TRANSISTOR	1	<R>
QR60001	MRN2402	TRANSISTOR	1	<R>
QR60002	MRN1403	TRANSISTOR	1	<R>
QR60004	MRN1404	TRANSISTOR	1	<R>
QR60006,07	MRN1404	TRANSISTOR	2	<R>
QR60012	UN2219	TRANSISTOR	1	<R>
QR60013	MRN1402	TRANSISTOR	1	<R>
QR60501	MRN1402	TRANSISTOR	1	<R>
QR60502	UN211F	TRANSISTOR	1	<R>
QR60503	MRN1404	TRANSISTOR	1	<R>
R1501	ERDS2TJ181	C.RESISTOR 1/4W 180	1	
R1502	ERJ6GEYJ102	M.RESISTOR CH 1/10W 1K	1	
R1504	ERDS2TJ181	C.RESISTOR 1/4W 180	1	
R1505	VRE0034E103	M.RESISTOR CH 1/10W 10K	1	
R1506	VRE0034E473	M.RESISTOR CH 1/10W 47K	1	
R1507	VRE0034E222	M.RESISTOR CH 1/10W 2.2K	1	
R1509	ERJ6GEYJ102	M.RESISTOR CH 1/10W 1K	1	
R1510	ERJ6GEYJ331	M.RESISTOR CH 1/10W 330	1	
R1511	ERJ6GEYJ224	M.RESISTOR CH 1/10W 220K	1	
R1512-14	ERJ6GEYJ103	M.RESISTOR CH 1/10W 10K	3	
R1515	ERDS2TJ222	C.RESISTOR 1/4W 2.2K	1	
R1516-18	ERJ6GEYJ103	M.RESISTOR CH 1/10W 10K	3	
R1519	ERDS2TJ333	C.RESISTOR 1/4W 33K	1	

Ref.No.		Part No.	Part Name & Description	Pcs	Remarks
R1520		ERJ6GEYJ332	M.RESISTOR CH 1/10W 3.3K	1	
R1521		ERDS2TJ221	C.RESISTOR 1/4W 220	1	
R1522		ERDS2TJ181	C.RESISTOR 1/4W 180	1	
R1525		ERDS2TJ222	C.RESISTOR 1/4W 2.2K	1	
R1526,27		ERJ6GEYJ331	M.RESISTOR CH 1/10W 330	2	
R1528,29		ERDS2TJ181	C.RESISTOR 1/4W 180	2	
R1531		ERJ6GEYJ102	M.RESISTOR CH 1/10W 1K	1	
R1532		VRE0034E562	M.RESISTOR CH 1/10W 5.6K	1	
R1533		VRE0034E392	M.RESISTOR CH 1/10W 3.9K	1	
R1534		VRE0034E222	M.RESISTOR CH 1/10W 2.2K	1	
R1535		ERJ6GEYJ123	M.RESISTOR CH 1/10W 12K	1	
R1536		ERJ6GEYJ103	M.RESISTOR CH 1/10W 10K	1	
R1541,42		ERJ6GEYJ103	M.RESISTOR CH 1/10W 10K	2	
R2001		ERJ6GEYJ471	M.RESISTOR CH 1/10W 470	1	
R2002		ERJ6GEYJ103	M.RESISTOR CH 1/10W 10K	1	
R2004		ERJ6GEYG333	M.RESISTOR CH 1/10W 33K	1	
R2005-07		ERJ6GEYJ102	M.RESISTOR CH 1/10W 1K	3	
R2008		ERJ6GEYJ222	M.RESISTOR CH 1/10W 2.2K	1	
R2009,10		ERJ6GEYJ102	M.RESISTOR CH 1/10W 1K	2	
R2013		ERJ6GEYJ332	M.RESISTOR CH 1/10W 3.3K	1	
R2017,18		ERJ6GEYJ103	M.RESISTOR CH 1/10W 10K	2	
R2019		ERJ6GEYJ124	M.RESISTOR CH 1/10W 120K	1	
R2020		ERJ6GEYJ103	M.RESISTOR CH 1/10W 10K	1	
R2021		ERJ6GEYJ683	M.RESISTOR CH 1/10W 68K	1	
R2022		ERJ6GEYJ102	M.RESISTOR CH 1/10W 1K	1	
R2027		ERJ6GEYJ105	M.RESISTOR CH 1/10W 1M	1	
R2028		ERJ6GEYJ562	M.RESISTOR CH 1/10W 5.6K	1	
R2029		ERJ6GEYJ102	M.RESISTOR CH 1/10W 1K	1	
R2030		ERJ6GEYJ223	M.RESISTOR CH 1/10W 22K	1	
R2031		ERJ6GEYG241	M.RESISTOR CH 1/10W 240	1	
R2032		ERJ6GEYJ473	M.RESISTOR CH 1/10W 47K	1	
R2033		ERJ6GEYJ224	M.RESISTOR CH 1/10W 220K	1	
R2035,36		ERJ6GEYJ101	M.RESISTOR CH 1/10W 100	2	
R2047		ERJ6GEYJ332	M.RESISTOR CH 1/10W 3.3K	1	
R2048		ERJ6GEYJ471	M.RESISTOR CH 1/10W 470	1	
R2049		ERJ6GEYJ103	M.RESISTOR CH 1/10W 10K	1	
R2054-56		ERJ6GEYJ101	M.RESISTOR CH 1/10W 100	3	
R2059,60		ERJ6GEYJ101	M.RESISTOR CH 1/10W 100	2	
R2062		ERJ6GEYJ101	M.RESISTOR CH 1/10W 100	1	
R2064		ERJ6GEYJ103	M.RESISTOR CH 1/10W 10K	1	
R2067		ERJ6GEY0R00	M.RESISTOR CH 1/10W 0	1	
R2201		ERJ6GEYJ105	M.RESISTOR CH 1/10W 1M	1	
R2202		ERJ6GEYJ101	M.RESISTOR CH 1/10W 100	1	
R2203		ERJ6GEYJ331	M.RESISTOR CH 1/10W 330	1	
R2205,06		ERJ6GEYJ473	M.RESISTOR CH 1/10W 47K	2	
R2207		ERJ6GEYJ103	M.RESISTOR CH 1/10W 10K	1	
R2208		ERJ6GEYG104	M.RESISTOR CH 1/10W 100K	1	
R2211		ERJ6GEYG473	M.RESISTOR CH 1/10W 47K	1	
R2212		ERJ6GEYJ103	M.RESISTOR CH 1/10W 10K	1	
R2213-18		ERJ6GEYJ101	M.RESISTOR CH 1/10W 100	6	
R2220-23		ERJ6GEYJ101	M.RESISTOR CH 1/10W 100	4	
R2240		ERJ6GEYG473	M.RESISTOR CH 1/10W 47K	1	
R2241		ERJ6GEYG104	M.RESISTOR CH 1/10W 100K	1	
R2242		ERJ6GEYJ101	M.RESISTOR CH 1/10W 100	1	
R2331		ERJ6GEYJ222	M.RESISTOR CH 1/10W 2.2K	1	
R2333		ERJ6GEYJ101	M.RESISTOR CH 1/10W 100	1	
R2334		ERJ6GEYJ104	M.RESISTOR CH 1/10W 100K	1	
R2335		ERJ6GEYG333	M.RESISTOR CH 1/10W 33K	1	
R2336		ERJ6GEYJ822	M.RESISTOR CH 1/10W 8.2K	1	
R2337		ERJ6GEYG242	M.RESISTOR CH 1/10W 2.4K	1	
R2338		ERJ6GEYJ822	M.RESISTOR CH 1/10W 8.2K	1	
R2339		ERJ6GEYJ104	M.RESISTOR CH 1/10W 100K	1	
R2340,41		ERJ6GEYJ392	M.RESISTOR CH 1/10W 3.9K	2	
R2342		ERJ6GEYJ681	M.RESISTOR CH 1/10W 680	1	
R2343		ERJ6GEYJ473	M.RESISTOR CH 1/10W 47K	1	
R2344		ERJ6GEYJ563	M.RESISTOR CH 1/10W 56K	1	
R2345		ERJ6GEYG153	M.RESISTOR CH 1/10W 15K	1	
R2346		ERJ6GEYJ563	M.RESISTOR CH 1/10W 56K	1	
R2347		ERJ6GEYJ124	M.RESISTOR CH 1/10W 120K	1	
R2352		ERJ6GEYJ752	M.RESISTOR CH 1/10W 7.5K	1	
R2353,54		ERJ6GEYJ103	M.RESISTOR CH 1/10W 10K	2	
R2355		ERJ6GEYJ752	M.RESISTOR CH 1/10W 7.5K	1	
R2356		ERJ6GEYJ104	M.RESISTOR CH 1/10W 100K	1	
R2357,58		ERJ6GEYJ272	M.RESISTOR CH 1/10W 2.7K	2	
R2359		ERJ6GEYJ104	M.RESISTOR CH 1/10W 100K	1	

Ref.No.		Part No.	Part Name & Description	Pcs	Remarks
R2360,61		ERJ6GEYJ222	M.RESISTOR CH 1/10W 2.2K	2	
R2362		ERJ6GEYG472	M.RESISTOR CH 1/10W 4.7K	1	
R2363		ERJ6GEYG153	M.RESISTOR CH 1/10W 15K	1	
R2364		ERJ6GEYG913	M.RESISTOR CH 1/10W 91K	1	
R2370,71		ERJ6GEYJ103	M.RESISTOR CH 1/10W 10K	2	
R2379		ERJ6GEYJ104	M.RESISTOR CH 1/10W 100K	1	
R2401		ERJ6GEYJ332	M.RESISTOR CH 1/10W 3.3K	1	
R2402,03		ERJ6GEYJ104	M.RESISTOR CH 1/10W 100K	2	
R2406		ERJ6GEYJ105	M.RESISTOR CH 1/10W 1M	1	
R2407,08		ERJ6GEYJ473	M.RESISTOR CH 1/10W 47K	2	
R2409		ERJ6GEYJ104	M.RESISTOR CH 1/10W 100K	1	
R2410		ERJ6GEYJ473	M.RESISTOR CH 1/10W 47K	1	
R2411		ERJ6GEY0R00	M.RESISTOR CH 1/10W 0	1	
R2501		ERJ6GEYJ682	M.RESISTOR CH 1/10W 6.8K	1	
R2502		ERJ6GEYJ334	M.RESISTOR CH 1/10W 330K	1	
R2503		ERJ6GEYJ274	M.RESISTOR CH 1/10W 270K	1	
R2504		ERJ6GEYJ123	M.RESISTOR CH 1/10W 12K	1	
R2505		ERJ6GEYJ334	M.RESISTOR CH 1/10W 330K	1	
R2506		ERJ6GEYJ154	M.RESISTOR CH 1/10W 150K	1	
R2507-10		ERJ6GEYG104	M.RESISTOR CH 1/10W 100K	4	
R2511-15		ERJ6GEYJ104	M.RESISTOR CH 1/10W 100K	5	
R2516		ERJ6GEYG393	M.RESISTOR CH 1/10W 39K	1	
R2517		ERJ6GEYG223	M.RESISTOR CH 1/10W 22K	1	
R2518-20		ERJ6GEYG124	M.RESISTOR CH 1/10W 120K	3	
R2521		ERJ6GEYG154	M.RESISTOR CH 1/10W 150K	1	
R2522		ERJ6GEYJ104	M.RESISTOR CH 1/10W 100K	1	
R2523,24		ERJ6GEYJ102	M.RESISTOR CH 1/10W 1K	2	
R2701		ERJ6GEYJ563	M.RESISTOR CH 1/10W 56K	1	
R2709,10		ERJ6GEYJ103	M.RESISTOR CH 1/10W 10K	2	
R2711		ERJ6GEYJ154	M.RESISTOR CH 1/10W 150K	1	
R2712		ERJ6GEYJ104	M.RESISTOR CH 1/10W 100K	1	
R2713		ERJ6GEYJ222	M.RESISTOR CH 1/10W 2.2K	1	
R2714-17		ERJ6GEYJ103	M.RESISTOR CH 1/10W 10K	4	
R2718		ERG2SJ561	M.RESISTOR 2W 560	1	
R2719		ERDS2TJ270	C.RESISTOR 1/4W 27	1	
R2725		ERJ6GEYJ334	M.RESISTOR CH 1/10W 330K	1	
R2727		ERDS2TJ150	C.RESISTOR 1/4W 15	1	
R2729		ERJ6GEYJ102	M.RESISTOR CH 1/10W 1K	1	
R2730		ERDS2TJ182	C.RESISTOR 1/4W 1.8K	1	
R2731		ERJ6GEYJ103	M.RESISTOR CH 1/10W 10K	1	
R2732		ERJ6GEYG153	M.RESISTOR CH 1/10W 15K	1	
R2733		ERDS2TJ182	C.RESISTOR 1/4W 1.8K	1	
R2734		ERDS2TJ391	C.RESISTOR 1/4W 390	1	
R2735		ERJ6GEYJ103	M.RESISTOR CH 1/10W 10K	1	
R2736		ERJ6GEYG153	M.RESISTOR CH 1/10W 15K	1	
R2738,39		ERDS2TJ150	C.RESISTOR 1/4W 15	2	
R2740		ERX12SJR68	M.RESISTOR CH 1/2W 0.68	1	
R2743		ERJ6GEYJ122	M.RESISTOR CH 1/10W 1.2K	1	
R2747		ERJ6GEYJ103	M.RESISTOR CH 1/10W 10K	1	
R2748		ERJ6GEYJ124	M.RESISTOR CH 1/10W 120K	1	
R2751		ERJ6GEYJ102	M.RESISTOR CH 1/10W 1K	1	
R2752-54		ERDS2TJ330	C.RESISTOR 1/4W 33	3	
R2755		ERX12SJR47	M.RESISTOR CH 1/2W 0.47	1	
R2756		ERJ6GEYJ330	M.RESISTOR CH 1/10W 33	1	
R2757		ERJ6GEYJ103	M.RESISTOR CH 1/10W 10K	1	
R2758		ERJ6GEYJ224	M.RESISTOR CH 1/10W 220K	1	
R2759		ERJ6GEYJ223	M.RESISTOR CH 1/10W 22K	1	
R2760		ERJ6GEYJ184	M.RESISTOR CH 1/10W 180K	1	
R2761,62		ERJ6GEYJ103	M.RESISTOR CH 1/10W 10K	2	
R2763,64		ERJ6GEYJ473	M.RESISTOR CH 1/10W 47K	2	
R2765		ERJ6GEYJ103	M.RESISTOR CH 1/10W 10K	1	
R2766		ERJ6GEYJ224	M.RESISTOR CH 1/10W 220K	1	
R2767		ERJ6GEYJ223	M.RESISTOR CH 1/10W 22K	1	
R2768		ERJ6GEYJ184	M.RESISTOR CH 1/10W 180K	1	
R2769,70		ERJ6GEYJ103	M.RESISTOR CH 1/10W 10K	2	
R2771,72		ERJ6GEYJ473	M.RESISTOR CH 1/10W 47K	2	
R2773,74		ERJ6GEYJ103	M.RESISTOR CH 1/10W 10K	2	
R2775		ERJ6GEYJ473	M.RESISTOR CH 1/10W 47K	1	
R2776		ERJ6GEYG472	M.RESISTOR CH 1/10W 4.7K	1	
R2777		ERJ6GEYJ334	M.RESISTOR CH 1/10W 330K	1	
R2778-82		ERJ6GEYJ103	M.RESISTOR CH 1/10W 10K	5	
R2783		ERJ6GEYJ224	M.RESISTOR CH 1/10W 220K	1	
R2784		ERJ6GEYJ103	M.RESISTOR CH 1/10W 10K	1	
R2785		ERJ6GEYJ224	M.RESISTOR CH 1/10W 220K	1	
R2786,87		ERJ6GEYJ103	M.RESISTOR CH 1/10W 10K	2	

Ref.No.		Part No.	Part Name & Description	Pcs	Remarks
R2788		ERJ6GEYJ473	M.RESISTOR CH 1/10W 47K	1	
R2789		ERJ6GEYG472	M.RESISTOR CH 1/10W 4.7K	1	
R2790		ERJ6GEYG333	M.RESISTOR CH 1/10W 33K	1	
R2791		ERJ6GEYJ332	M.RESISTOR CH 1/10W 3.3K	1	
R2792		ERJ6GEYJ103	M.RESISTOR CH 1/10W 10K	1	
R2793		ERJ6GEYJ473	M.RESISTOR CH 1/10W 47K	1	
R2794		ERJ6GEYG472	M.RESISTOR CH 1/10W 4.7K	1	
R2795		ERJ6GEYG333	M.RESISTOR CH 1/10W 33K	1	
R2796		ERJ6GEYJ332	M.RESISTOR CH 1/10W 3.3K	1	
R2799,00		ERJ6GEY0R00	M.RESISTOR CH 1/10W 0	2	
R2803		ERG2SJ221	M.RESISTOR 2W 220	1	
R2821		ERDS2TJ682	C.RESISTOR 1/4W 6.8K	1	
R2828,29		ERJ6GEYJ104	M.RESISTOR CH 1/10W 100K	2	
R2830		ERDS2TJ391	C.RESISTOR 1/4W 390	1	
R2831		ERDS2TJ561	C.RESISTOR 1/4W 560	1	
R2832		ERDS2TJ562	C.RESISTOR 1/4W 5.6K	1	
R2833		ERDS2TJ391	C.RESISTOR 1/4W 390	1	
R2834		ERDS2TJ182	C.RESISTOR 1/4W 1.8K	1	
R2835		ERJ6GEYJ471	M.RESISTOR CH 1/10W 470	1	
R2836		ERJ6GEYJ103	M.RESISTOR CH 1/10W 10K	1	
R2838,39		ERJ6GEYJ103	M.RESISTOR CH 1/10W 10K	2	
R2840		ERJ6GEYJ222	M.RESISTOR CH 1/10W 2.2K	1	
R2841		ERJ6GEYJ104	M.RESISTOR CH 1/10W 100K	1	
R2842,43		ERJ6GEYJ103	M.RESISTOR CH 1/10W 10K	2	
R2844		ERJ6GEYJ222	M.RESISTOR CH 1/10W 2.2K	1	
R2845		ERJ6GEYJ104	M.RESISTOR CH 1/10W 100K	1	
R2846-48		ERJ6GEYJ271	M.RESISTOR CH 1/10W 270	3	
R2849		ERJ6GEY0R00	M.RESISTOR CH 1/10W 0	1	
R2850		ERDS2TJ102	C.RESISTOR 1/4W 1K	1	
R2862,63		ERJ6GEYJ332	M.RESISTOR CH 1/10W 3.3K	2	
R60001		ERJ6GEYJ103	M.RESISTOR CH 1/10W 10K	1	
R60002		ERD2FCG220	C.RESISTOR 2W 22	1	<!>
R60003		ERJ6GEYJ103	M.RESISTOR CH 1/10W 10K	1	
R60004		ERJ6GEYJ183	M.RESISTOR CH 1/10W 18K	1	
R60005		ERJ6GEYJ272	M.RESISTOR CH 1/10W 2.7K	1	
R60006		ERJ6GEYJ103	M.RESISTOR CH 1/10W 10K	1	
R60007		ERJ6GEYJ272	M.RESISTOR CH 1/10W 2.7K	1	
R60008		ERJ6GEYJ103	M.RESISTOR CH 1/10W 10K	1	
R60009		ERJ6GEYJ183	M.RESISTOR CH 1/10W 18K	1	
R60010		ERJ6GEYJ471	M.RESISTOR CH 1/10W 470	1	
R60011		ERJ6GEYJ104	M.RESISTOR CH 1/10W 100K	1	
R60012		ERJ6GEYJ473	M.RESISTOR CH 1/10W 47K	1	
R60013		ERJ6GEYJ471	M.RESISTOR CH 1/10W 470	1	
R60015		ERJ6GEYJ103	M.RESISTOR CH 1/10W 10K	1	
R60016		ERJ6GEYJ272	M.RESISTOR CH 1/10W 2.7K	1	
R60017,18		ERJ6GEYJ103	M.RESISTOR CH 1/10W 10K	2	
R60019		ERDS2TJ472	C.RESISTOR 1/4W 4.7K	1	
R60020		ERDS2TJ471	C.RESISTOR 1/4W 470	1	
R60021-24		ERJ6GEYJ103	M.RESISTOR CH 1/10W 10K	4	
R60026-29		ERJ6GEYJ103	M.RESISTOR CH 1/10W 10K	4	
R60030		ERJ6GEYJ102	M.RESISTOR CH 1/10W 1K	1	
R60031		ERJ6GEYJ103	M.RESISTOR CH 1/10W 10K	1	
R60032-35		ERJ6GEYJ473	M.RESISTOR CH 1/10W 47K	4	
R60037		ERD2FCJ4R7	C.RESISTOR 2W 4.7	1	
R60038		ERJ6GEY0R00	M.RESISTOR CH 1/10W 0	1	
R60039		ERJ6GEYJ473	M.RESISTOR CH 1/10W 47K	1	
R60043,44		ERJ6GEYG472	M.RESISTOR CH 1/10W 4.7K	2	
R60045		ERJ6GEYJ103	M.RESISTOR CH 1/10W 10K	1	
R60047		ERG1SJ330	M.RESISTOR 1W 33	1	
R60050		ERJ6GEY0R00	M.RESISTOR CH 1/10W 0	1	
R60055		ERJ6GEYJ103	M.RESISTOR CH 1/10W 10K	1	
R60056		ERJ6GEYJ473	M.RESISTOR CH 1/10W 47K	1	
R60057		ERJ6GEYJ822	M.RESISTOR CH 1/10W 8.2K	1	
R60058		ERJ6GEYJ393	M.RESISTOR CH 1/10W 39K	1	
R60059		ERJ6GEYJ103	M.RESISTOR CH 1/10W 10K	1	
R60060		ERJ6GEYJ684	M.RESISTOR CH 1/10W 680K	1	
R60101		ERJ6GEYG102	M.RESISTOR CH 1/10W 1K	1	
R60102		ERJ6GEYG302	M.RESISTOR CH 1/10W 3K	1	
R60103-05		ERJ6GEYG102	M.RESISTOR CH 1/10W 1K	3	
R60106		ERJ6GEYJ273	M.RESISTOR CH 1/10W 27K	1	
R60107		ERJ6GEYJ823	M.RESISTOR CH 1/10W 82K	1	
R60108-11		ERJ6GEYJ103	M.RESISTOR CH 1/10W 10K	4	
R60501		ERJ6GEYJ222	M.RESISTOR CH 1/10W 2.2K	1	
R60502,03		ERJ6GEYG153	M.RESISTOR CH 1/10W 15K	2	
R60504		ERJ6GEYJ181	M.RESISTOR CH 1/10W 180	1	

Ref.No.		Part No.	Part Name & Description	Pcs	Remarks
R60505		ERJ6GEYJ122	M.RESISTOR CH 1/10W 1.2K	1	
R60506		ERJ6GEYJ182	M.RESISTOR CH 1/10W 1.8K	1	
R60507,08		ERJ6GEYJ222	M.RESISTOR CH 1/10W 2.2K	2	
R60509		ERJ6GEYJ681	M.RESISTOR CH 1/10W 680	1	
R60510,11		ERJ6GEYJ272	M.RESISTOR CH 1/10W 2.7K	2	
R60512		ERJ6GEYJ102	M.RESISTOR CH 1/10W 1K	1	
R60513		ERJ6GEYJ121	M.RESISTOR CH 1/10W 120	1	
R60514		ERJ6GEYJ183	M.RESISTOR CH 1/10W 18K	1	
R60515		ERJ6GEYJ474	M.RESISTOR CH 1/10W 470K	1	
R60516		ERJ6GEYJ682	M.RESISTOR CH 1/10W 6.8K	1	
R60517,18		ERJ6GEYJ821	M.RESISTOR CH 1/10W 820	2	
R60519		ERJ6GEYJ181	M.RESISTOR CH 1/10W 180	1	
R60520,21		ERJ6GEYJ682	M.RESISTOR CH 1/10W 6.8K	2	
R60522		ERJ6GEYJ562	M.RESISTOR CH 1/10W 5.6K	1	
R60523		ERJ6GEYJ332	M.RESISTOR CH 1/10W 3.3K	1	
R60524		ERJ6GEYJ103	M.RESISTOR CH 1/10W 10K	1	
R60525		ERDS2TJ151	C.RESISTOR 1/4W 150	1	
R60526		ERJ6GEYJ683	M.RESISTOR CH 1/10W 68K	1	
R60527,28		ERG1SJ300	M.RESISTOR 1W 30	2	
R60529		ERJ6GEYJ682	M.RESISTOR CH 1/10W 6.8K	1	
R60530		ERJ6GEYJ473	M.RESISTOR CH 1/10W 47K	1	
T1501		ETE13K86AY	TRANSFORMER	1	
VR2001		EVN32CA00B54	V.RESISTOR 50K	1	
VR2003		EVN32CA00B15	V.RESISTOR 100K	1	
X2001		VSX0296	CRYSTAL OSCILLATOR	1	<R>
X2002		VSX0066	CRYSTAL OSCILLATOR	1	<R>
X2201		VSX0197	CRYSTAL OSCILLATOR	1	<R>
X2401		VSX0086	CRYSTAL OSCILLATOR	1	<R>
X2701		VSX0136	CRYSTAL OSCILLATOR	1	<R>
X60001		VSX0230	CRYSTAL OSCILLATOR	1	<R>
			MISCELLANEOUS		
E43		VMX0985	SPACER	2	
E52		XYN3+F8	SCREW	2	
E80		VSC4042	HEAT SINK	2	
E82		VMC0493	HEAT SINK SPRING	1	
E84		VMC0075	HEAT SINK SPRING	1	
E83		VSC1215	HEAT SINK	1	
E42		VJF0816	CORD CLAMPER	1	
E97		VWJ18AW105M1	FLEXIBLE WIRE	1	
E96		VWJ04CN150CA	FLAT CABLE	1	
E81		VSC1689	HEAT SINK	1	

Ref.No.		Part No.	Part Name & Description	Pcs	Remarks
		VEP08160B	P.C.BOARD W/COMPONENT		
			TBC (2)		
C8601,02		ECUM1H103KBN	C.CAPACITOR CH 50V 0.01U	2	
C8603		ECUM1H181JCN	C.CAPACITOR CH 50V 180P	1	
C8604		ECUM1H103KBN	C.CAPACITOR CH 50V 0.01U	1	
C8605		ECUM1E104ZFN	C.CAPACITOR CH 25V 0.1U	1	
C8606,07		ECEV1CV470Q	E.CAPACITOR CH 16V 47U	2	
C8608		ECUM1E104ZFN	C.CAPACITOR CH 25V 0.1U	1	
C8609		ECUM1H180JCN	C.CAPACITOR CH 50V 18P	1	
C8610		ECUM1H680JCN	C.CAPACITOR CH 50V 68P	1	
C8611,12		ECUM1E104ZFN	C.CAPACITOR CH 25V 0.1U	2	
C8613		ECEV1HN010Q	E.CAPACITOR 50V 1U	1	
C8614		ECUM1H330JCN	C.CAPACITOR CH 50V 33P	1	
C8615		ECUM1E104ZFN	C.CAPACITOR CH 25V 0.1U	1	
C8616,17		ECUM1H101JCN	C.CAPACITOR CH 50V 100P	2	
C8618		ECUM1H220JCN	C.CAPACITOR CH 50V 22P	1	
C8619		ECUM1H470JCN	C.CAPACITOR CH 50V 47P	1	
C8620-22		ECUM1E104ZFN	C.CAPACITOR CH 25V 0.1U	3	
C8623		ECUM1H390JCN	C.CAPACITOR CH 50V 39P	1	
C8624		ECUM1E104ZFN	C.CAPACITOR CH 25V 0.1U	1	
C8625		ECEV1CV470Q	E.CAPACITOR CH 16V 47U	1	
C8628		ECEV0JV101Q	E.CAPACITOR 6.3V 100U	1	
C8629		ECUM1H103KBN	C.CAPACITOR CH 50V 0.01U	1	
C8630		ECEV1CV470Q	E.CAPACITOR CH 16V 47U	1	
C8631		ECUM1H103KBN	C.CAPACITOR CH 50V 0.01U	1	
C8632		ECEV1CV470Q	E.CAPACITOR CH 16V 47U	1	
C8633		ECUM1H103KBN	C.CAPACITOR CH 50V 0.01U	1	
C8634		ECEV1CV470Q	E.CAPACITOR CH 16V 47U	1	
C8635		ECUM1H103KBN	C.CAPACITOR CH 50V 0.01U	1	
C8636		ECEV1CV470Q	E.CAPACITOR CH 16V 47U	1	
C8637		ECUM1H103KBN	C.CAPACITOR CH 50V 0.01U	1	
C8640		ECUM1E104ZFN	C.CAPACITOR CH 25V 0.1U	1	
C8641		ECUM1H103KBN	C.CAPACITOR CH 50V 0.01U	1	
C8642		ECUM1E104ZFN	C.CAPACITOR CH 25V 0.1U	1	
C8643		ECEV1HN010Q	E.CAPACITOR 50V 1U	1	
C8644		ECUM1E104ZFN	C.CAPACITOR CH 25V 0.1U	1	
C8645		ECEV1CV470Q	E.CAPACITOR CH 16V 47U	1	
C8646,47		ECUM1E104ZFN	C.CAPACITOR CH 25V 0.1U	2	
C8648		ECEV1CV470Q	E.CAPACITOR CH 16V 47U	1	
C8649		ECUM1H103KBN	C.CAPACITOR CH 50V 0.01U	1	
C8650		ECUM1E104ZFN	C.CAPACITOR CH 25V 0.1U	1	
C8651		ECEV1VAN2R2	E.CAPACITOR CH 35V 2.2U	1	
C8652		ECUM1H102JCN	C.CAPACITOR CH 50V 1000P	1	
C8653		ECUM1E104ZFN	C.CAPACITOR CH 25V 0.1U	1	
C8654		ECEV1CV470Q	E.CAPACITOR CH 16V 47U	1	
C8655		ECUM1H221JCN	C.CAPACITOR CH 50V 220P	1	
C8656-61		ECUM1E104ZFN	C.CAPACITOR CH 25V 0.1U	6	
C8662		ECUM1H103KBN	C.CAPACITOR CH 50V 0.01U	1	
C8663		ECEV1CV470Q	E.CAPACITOR CH 16V 47U	1	
C8664		ECUM1H103KBN	C.CAPACITOR CH 50V 0.01U	1	
C8665		ECEV1CV470Q	E.CAPACITOR CH 16V 47U	1	
C8671		ECEV1CV470Q	E.CAPACITOR CH 16V 47U	1	
C8672		ECUM1E104ZFN	C.CAPACITOR CH 25V 0.1U	1	
C8673		ECUM1H820JCN	C.CAPACITOR CH 50V 82P	1	
C8674		ECEV1CV100Q	E.CAPACITOR 16V 10U	1	
C8675		ECUM1E104ZFN	C.CAPACITOR CH 25V 0.1U	1	
C8676		ECUM1H103KBN	C.CAPACITOR CH 50V 0.01U	1	
C8677		ECUM1E104ZFN	C.CAPACITOR CH 25V 0.1U	1	
C8678		ECEV1VAN2R2	E.CAPACITOR CH 35V 2.2U	1	
C8679		ECUM1E104ZFN	C.CAPACITOR CH 25V 0.1U	1	
C8680		ECEV1CV470Q	E.CAPACITOR CH 16V 47U	1	
C8681		ECUM1E104ZFN	C.CAPACITOR CH 25V 0.1U	1	
C8682		ECUM1H470JCN	C.CAPACITOR CH 50V 47P	1	
C8683,84		ECUM1E104ZFN	C.CAPACITOR CH 25V 0.1U	2	
C8685		ECUM1H102JCN	C.CAPACITOR CH 50V 1000P	1	
C8686		ECUM1H180JCN	C.CAPACITOR CH 50V 18P	1	
C8687		ECUM1H220JCN	C.CAPACITOR CH 50V 22P	1	
C8688		ECUM1H103KBN	C.CAPACITOR CH 50V 0.01U	1	
C8689		ECUM1E104ZFN	C.CAPACITOR CH 25V 0.1U	1	
C8690		ECEV1CV100Q	E.CAPACITOR 16V 10U	1	
C8691		ECUM1H030DCN	C.CAPACITOR CH 50V 3P	1	

Ref.No.		Part No.	Part Name & Description	Pcs	Remarks
C8692		ECUM1H150JCN	C.CAPACITOR CH 50V 15P	1	
C8693-95		ECUM1E104ZFN	C.CAPACITOR CH 25V 0.1U	3	
C8701		ECUM1E104ZFN	C.CAPACITOR CH 25V 0.1U	1	
C8702		ECEV1CN100Q	E.CAPACITOR CH 16V 10U	1	
C8703		ECUM1H102JCN	C.CAPACITOR CH 50V 1000P	1	
C8704		ECUM1H150JCN	C.CAPACITOR CH 50V 15P	1	
C8705		ECUM1E104ZFN	C.CAPACITOR CH 25V 0.1U	1	
C8706		ECEV1CV100Q	E.CAPACITOR 16V 10U	1	
C8707		ECUM1E104ZFN	C.CAPACITOR CH 25V 0.1U	1	
C8708		ECEV1CV100Q	E.CAPACITOR 16V 10U	1	
C8709-13		ECUM1E104ZFN	C.CAPACITOR CH 25V 0.1U	5	
C8714		ECUM1H220JCN	C.CAPACITOR CH 50V 22P	1	
C8715		ECUM1H820JCN	C.CAPACITOR CH 50V 82P	1	
C8716-21		ECUM1E104ZFN	C.CAPACITOR CH 25V 0.1U	6	
C8722		ECUM1H102JCN	C.CAPACITOR CH 50V 1000P	1	
C8723		ECUM1H151JCN	C.CAPACITOR CH 50V 150P	1	
C8724,25		ECUM1E104ZFN	C.CAPACITOR CH 25V 0.1U	2	
C8726		ECUM1H331JCN	C.CAPACITOR CH 50V 330P	1	
C8801		ECUM1H101JCN	C.CAPACITOR CH 50V 100P	1	
C8802		ECUM1H221JCN	C.CAPACITOR CH 50V 220P	1	
C8803		ECEV0JV470Q	E.CAPACITOR 6.3V 47U	1	
C8804,05		ECUM1E104ZFN	C.CAPACITOR CH 25V 0.1U	2	
C8806		ECEV0JV470Q	E.CAPACITOR 6.3V 47U	1	
C8807,08		ECUM1E104ZFN	C.CAPACITOR CH 25V 0.1U	2	
C8809,10		ECEV0GV470Q	E.CAPACITOR 4V 47U	2	
C8811		ECUM1H101JCN	C.CAPACITOR CH 50V 100P	1	
C8813-15		ECUM1E104ZFN	C.CAPACITOR CH 25V 0.1U	3	
C8816		ECEV0GV470Q	E.CAPACITOR 4V 47U	1	
C8817		ECUM1H101JCN	C.CAPACITOR CH 50V 100P	1	
C8819		ECUM1E104ZFN	C.CAPACITOR CH 25V 0.1U	1	
C8820		ECUM1H151JCN	C.CAPACITOR CH 50V 150P	1	
C8821		ECUM1H471JCN	C.CAPACITOR CH 50V 470P	1	
C8822,23		ECEV1HV010Q	E.CAPACITOR 50V 1U	2	
C8824		ECUM1H330JCN	C.CAPACITOR CH 50V 33P	1	
C8826		ECUM1H221JCN	C.CAPACITOR CH 50V 220P	1	
C8827		ECUM1E104ZFN	C.CAPACITOR CH 25V 0.1U	1	
C8828		ECEV0JV101Q	E.CAPACITOR 6.3V 100U	1	
C8829		ECUM1E104ZFN	C.CAPACITOR CH 25V 0.1U	1	
C8830		ECEV0JV101Q	E.CAPACITOR 6.3V 100U	1	
C8832		ECUM1E104ZFN	C.CAPACITOR CH 25V 0.1U	1	
C8833		ECUM1H150JCN	C.CAPACITOR CH 50V 15P	1	
C8835		ECEV0JV470Q	E.CAPACITOR 6.3V 47U	1	
C8836,37		ECUM1E104ZFN	C.CAPACITOR CH 25V 0.1U	2	
C8840		ECEV1CV470Q	E.CAPACITOR CH 16V 47U	1	
C8841		ECEV1CV220Q	E.CAPACITOR 16V 22U	1	
C8842,43		ECUM1E104ZFN	C.CAPACITOR CH 25V 0.1U	2	
C8846		ECUM1H103ZFN	C.CAPACITOR 50V 0.01U	1	
C8847		ECUM1E473KBN	C.CAPACITOR CH 25V 0.047U	1	
C8848		ECEV1CV100Q	E.CAPACITOR 16V 10U	1	
C8849-51		ECUM1E104ZFN	C.CAPACITOR CH 25V 0.1U	3	
C8852		ECEV0GV470Q	E.CAPACITOR 4V 47U	1	
C8853		ECUM1E104ZFN	C.CAPACITOR CH 25V 0.1U	1	
C8854		ECEV1HV010Q	E.CAPACITOR 50V 1U	1	
C8855		ECEV0JV470Q	E.CAPACITOR 6.3V 47U	1	
C8856		ECUM1E473KBN	C.CAPACITOR CH 25V 0.047U	1	
C8857		ECUM1E104ZFN	C.CAPACITOR CH 25V 0.1U	1	
C8859-62		ECUM1E104ZFN	C.CAPACITOR CH 25V 0.1U	4	
C8863		ECEV1CV100Q	E.CAPACITOR 16V 10U	1	
C8864		ECUM1E473KBN	C.CAPACITOR CH 25V 0.047U	1	
C8865		ECUM1H270JCN	C.CAPACITOR CH 50V 27P	1	
C8866		ECUM1H221JCN	C.CAPACITOR CH 50V 220P	1	
C8867		ECUM1H270JCN	C.CAPACITOR CH 50V 27P	1	
C8870		ECUM1H101JCN	C.CAPACITOR CH 50V 100P	1	
C8871		ECUM1H470JCN	C.CAPACITOR CH 50V 47P	1	
C8872		ECUM1H100DCN	C.CAPACITOR CH 50V 10P	1	
C8873		ECUM1H330JCN	C.CAPACITOR CH 50V 33P	1	
C8882,83		ECUM1H680JCN	C.CAPACITOR CH 50V 68P	2	
C8884		ECUM1E104ZFN	C.CAPACITOR CH 25V 0.1U	1	
C8885		ECEV0JV470Q	E.CAPACITOR 6.3V 47U	1	
C8886		ECUM1E104ZFN	C.CAPACITOR CH 25V 0.1U	1	
C8887		ECEV0JV470Q	E.CAPACITOR 6.3V 47U	1	
C8889		ECUM1E104ZFN	C.CAPACITOR CH 25V 0.1U	1	
C8890,91		ECUM1H220JCN	C.CAPACITOR CH 50V 22P	2	
C8892		ECUM1E104ZFN	C.CAPACITOR CH 25V 0.1U	1	
C8893,94		ECUM1H220JCN	C.CAPACITOR CH 50V 22P	2	

MC-Service

Ref.No.		Part No.	Part Name & Description	Pcs	Remarks
C8895		ECEV0JV470Q	E.CAPACITOR 6.3V 47U	1	
C8896,97		ECUM1E104ZFN	C.CAPACITOR CH 25V 0.1U	2	
C8898,99		ECUM1H220JCN	C.CAPACITOR CH 50V 22P	2	
C8900		ECEV0JV470Q	E.CAPACITOR 6.3V 47U	1	
C8901,02		ECUM1E104ZFN	C.CAPACITOR CH 25V 0.1U	2	
C8903		ECUM1H820JCN	C.CAPACITOR CH 50V 82P	1	
C8904,05		ECUM1E104ZFN	C.CAPACITOR CH 25V 0.1U	2	
C8906		ECUM1H100DCN	C.CAPACITOR CH 50V 10P	1	
C8907,08		ECUM1E104ZFN	C.CAPACITOR CH 25V 0.1U	2	
C8909		ECUM1H271JCN	C.CAPACITOR CH 50V 270P	1	
C8910		ECUM1H221JCN	C.CAPACITOR CH 50V 220P	1	
C8911,12		ECUM1E104ZFN	C.CAPACITOR CH 25V 0.1U	2	
C8913		ECUM1H181JCN	C.CAPACITOR CH 50V 180P	1	
C8914		ECUM1E104ZFN	C.CAPACITOR CH 25V 0.1U	1	
C8915		ECUM1H820JCN	C.CAPACITOR CH 50V 82P	1	
C8916-20		ECUM1E104ZFN	C.CAPACITOR CH 25V 0.1U	5	
C8921		ECEV1CV100Q	E.CAPACITOR 16V 10U	1	
C8922		ECUM1E104ZFN	C.CAPACITOR CH 25V 0.1U	1	
C8923		ECEV0GV470Q	E.CAPACITOR 4V 47U	1	
C8924		ECEV0JV470Q	E.CAPACITOR 6.3V 47U	1	
C8925		ECUM1H560JCN	C.CAPACITOR CH 50V 56P	1	
C8926-28		ECUM1E104ZFN	C.CAPACITOR CH 25V 0.1U	3	
C8930		ECUM1E104ZFN	C.CAPACITOR CH 25V 0.1U	1	
C8932		ECUM1H470JCN	C.CAPACITOR CH 50V 47P	1	
C8938		ECEV1CV100Q	E.CAPACITOR 16V 10U	1	
C8939		ECUM1E104ZFN	C.CAPACITOR CH 25V 0.1U	1	
C8940,41		ECUM1H050CCN	C.CAPACITOR CH 50V 5P	2	
C8945		ECUM1E104ZFN	C.CAPACITOR CH 25V 0.1U	1	
D8601		MA151WK	DIODE	1	<R>
D8602		MA151K	DIODE	1	<R>
D8604,05		MA723	DIODE	2	<R>
D8671		MA151K	DIODE	1	<R>
D8672		MA335-R	DIODE	1	<R>
D8673		MA151K	DIODE	1	<R>
D8701		MA151K	DIODE	1	<R>
D8801,02		MA335-R	DIODE	2	<R>
D8803		MA151K	DIODE	1	<R>
D8804		MA723	DIODE	1	<R>
FL8601-05		VLF1016A223	FILTER	5	
FL8671		VLF1016A223	FILTER	1	
FL8672-75		VLF1016A470	FILTER	4	
FL8701		VLF1016A223	FILTER	1	
FL8801		VLF0921	FILTER	1	
FL8802,03		VLF1289	FILTER	2	
IC8601		AN91A12S	IC	1	<R>
IC8602		NE521D	IC	1	<R>
IC8603,04		MN74HC221S	IC	2	<R>
IC8605		NJM082BM	IC	1	<R>
IC8606		MN74HC221S	IC	1	<R>
IC8607		MC74HCU04F	IC	1	<R>
IC8608		MC74HC125AF	IC	1	<R>
IC8609,10		NJM082BM	IC	2	<R>
IC8613		NJM78L09UA	IC	1	<R>
IC8671		MC14053BF	IC	1	<R>
IC8672		NJM082BM	IC	1	<R>
IC8673		NE521D	IC	1	<R>
IC8674		NJM78L09UA	IC	1	<R>
IC8675		TC7S08F	IC	1	<R>
IC8701		UPD65650J203	IC	1	<R>
IC8702		MN74HC221S	IC	1	<R>
IC8703		MC74HC04AF	IC	1	<R>
IC8704		TC7S08F	IC	1	<R>
IC8705		NJM082BM	IC	1	<R>
IC8706		TC7W04F	IC	1	<R>
IC8708		MC74HC164F	IC	1	<R>
IC8709		TC7S32F	IC	1	<R>

Ref.No.		Part No.	Part Name & Description	Pcs	Remarks
IC8801		AD826AR	IC	1	<R>
IC8802		BA7655AF	IC	1	<R>
IC8803		MM74HC221AM	IC	1	<R>
IC8804		AD826AR	IC	1	<R>
IC8805		NJM082BM	IC	1	<R>
IC8806		M51272FP	IC	1	<R>
IC8807		TC7S04F	IC	1	<R>
IC8808		MC14053BF	IC	1	<R>
IC8809		MC14013BF	IC	1	<R>
IC8810		LM358PS	IC	1	<R>
IC8811		TC4S66F	IC	1	<R>
IC8812		LM358PS	IC	1	<R>
IC8815		TC7S04F	IC	1	<R>
L8601		VLQ0319K101	COIL 100UH	1	
L8602		VLQ0319K221	COIL 220UH	1	
L8603		VLQ0163J390	COIL 39UH	1	
L8604		VLQ0319K470	COIL 47UH	1	
L8605,06		VLP0133	COIL	2	
L8612-14		VLQ0319K470	COIL 47UH	3	
L8671		VLQ0319K470	COIL 47UH	1	
L8672		VLQ0163J221	COIL 220UH	1	
L8673		VLQ0319K470	COIL 47UH	1	
L8701		VLQ0319K470	COIL 47UH	1	
L8801,02		VLQ0319K101	COIL 100UH	2	
L8803		VLQ0163J180	COIL 18UH	1	
L8804		VLQ0163J560	COIL 56UH	1	
L8805		VLQ0163J101	COIL 100UH	1	
L8806,07		VLQ0319K101	COIL 100UH	2	
L8812		VLQ0319K101	COIL 100UH	1	
L8813		VLQ0163J150	COIL 15UH	1	
L8814		VLQ0163J5R6	COIL 5.6UH	1	
L8815		VLQ0163J6R8	COIL 6.8UH	1	
L8818,19		VLQ0319K101	COIL 100UH	2	
L8820,21		VLQ0163J470	COIL 47UH	2	
L8822		VLQ0319K101	COIL 100UH	1	
L8823		VLQ0163J470	COIL 47UH	1	
L8824-27		VLQ0319K101	COIL 100UH	4	
L8828,29		VLQ0163J100	COIL 10UH	2	
P8933		VJP3176B100	CONNECTOR	1	
Q8671		MSB709-R	TRANSISTOR	1	<R>
Q8672,73		2SK608-R	TRANSISTOR	2	<R>
Q8701		MSD601-R	TRANSISTOR	1	<R>
Q8801-03		MSD601-R	TRANSISTOR	3	<R>
Q8804		MSB709-R	TRANSISTOR	1	<R>
Q8805,06		MSD601-R	TRANSISTOR	2	<R>
Q8808,09		MSD601-R	TRANSISTOR	2	<R>
Q8810		2SA1022-B	TRANSISTOR	1	<R>
Q8811		MSD601-R	TRANSISTOR	1	<R>
Q8812		2SA1022-B	TRANSISTOR	1	<R>
Q8813-15		MSD601-R	TRANSISTOR	3	<R>
Q8816		MSB709-R	TRANSISTOR	1	<R>
Q8817		MSC2295-B	TRANSISTOR	1	<R>
Q8818,19		MSB709-R	TRANSISTOR	2	<R>
Q8820		MSC2295-B	TRANSISTOR	1	<R>
Q8821		MSB709-R	TRANSISTOR	1	<R>
Q8822		MSC2295-B	TRANSISTOR	1	<R>
Q8823		MSB709-R	TRANSISTOR	1	<R>
Q8824,25		MSD601-R	TRANSISTOR	2	<R>
Q8826		MSB709-R	TRANSISTOR	1	<R>
Q8827,28		MSD601-R	TRANSISTOR	2	<R>
Q8829,30		MSC2295-B	TRANSISTOR	2	<R>
Q8831		XN6534	TRANSISTOR	1	<R>
Q8832		XN1213	TRANSISTOR-TRANSISTOR	1	<R>

Ref.No.		Part No.	Part Name & Description	Pcs	Remarks
R8601		ERJ6GEYJ224	M.RESISTOR CH 1/10W 220K	1	
R8602		ERJ6GEYJ684	M.RESISTOR CH 1/10W 680K	1	
R8603		ERJ6GEYJ103	M.RESISTOR CH 1/10W 10K	1	
R8604,05		ERJ6GEYJ822	M.RESISTOR CH 1/10W 8.2K	2	
R8606		ERJ6GEYJ221	M.RESISTOR CH 1/10W 220	1	
R8607-10		ERJ6GEYJ222	M.RESISTOR CH 1/10W 2.2K	4	
R8611		ERJ6GEYJ683	M.RESISTOR CH 1/10W 68K	1	
R8612		ERJ6GEYJ184	M.RESISTOR CH 1/10W 180K	1	
R8613,14		ERJ6GEYJ222	M.RESISTOR CH 1/10W 2.2K	2	
R8615		ERJ6GEYJ563	M.RESISTOR CH 1/10W 56K	1	
R8616		ERJ6GEYJ822	M.RESISTOR CH 1/10W 8.2K	1	
R8617		ERJ6GEYJ682	M.RESISTOR CH 1/10W 6.8K	1	
R8618		ERJ6GEYJ563	M.RESISTOR CH 1/10W 56K	1	
R8619		ERJ6GEYJ684	M.RESISTOR CH 1/10W 680K	1	
R8620		ERJ6GEYJ392	M.RESISTOR CH 1/10W 3.9K	1	
R8621		ERDS2TJ272	C.RESISTOR 1/4W 2.7K	1	
R8622,23		ERJ6GEYJ102	M.RESISTOR CH 1/10W 1K	2	
R8624		ERJ6GEYJ122	M.RESISTOR CH 1/10W 1.2K	1	
R8625		ERJ6GEYJ473	M.RESISTOR CH 1/10W 47K	1	
R8626		ERJ6GEYG153	M.RESISTOR CH 1/10W 15K	1	
R8627		ERJ6GEYJ822	M.RESISTOR CH 1/10W 8.2K	1	
R8628		ERJ6GEYG153	M.RESISTOR CH 1/10W 15K	1	
R8629		ERJ6GEYJ103	M.RESISTOR CH 1/10W 10K	1	
R8630		ERJ6GEYJ104	M.RESISTOR CH 1/10W 100K	1	
R8631		ERJ6GEYJ105	M.RESISTOR CH 1/10W 1M	1	
R8632		ERJ6GEYJ471	M.RESISTOR CH 1/10W 470	1	
R8633		ERJ6GEYJ473	M.RESISTOR CH 1/10W 47K	1	
R8634		ERJ6GEYJ102	M.RESISTOR CH 1/10W 1K	1	
R8636		ERJ6GEYJ223	M.RESISTOR CH 1/10W 22K	1	
R8637		ERJ6GEYJ105	M.RESISTOR CH 1/10W 1M	1	
R8671		ERJ6GEYJ222	M.RESISTOR CH 1/10W 2.2K	1	
R8672		ERJ6GEYJ152	M.RESISTOR CH 1/10W 1.5K	1	
R8673		ERJ6GEYJ103	M.RESISTOR CH 1/10W 10K	1	
R8674		ERJ6GEYJ102	M.RESISTOR CH 1/10W 1K	1	
R8676		ERJ6GEY0R00	M.RESISTOR CH 1/10W 0	1	
R8677		ERJ6GEYG153	M.RESISTOR CH 1/10W 15K	1	
R8678		ERJ6GEYJ273	M.RESISTOR CH 1/10W 27K	1	
R8679		ERJ6GEYJ223	M.RESISTOR CH 1/10W 22K	1	
R8680		ERJ6GEYJ105	M.RESISTOR CH 1/10W 1M	1	
R8681		ERJ6GEYJ102	M.RESISTOR CH 1/10W 1K	1	
R8682		ERJ6GEYJ473	M.RESISTOR CH 1/10W 47K	1	
R8683		ERJ6GEYJ822	M.RESISTOR CH 1/10W 8.2K	1	
R8684		ERJ6GEYG153	M.RESISTOR CH 1/10W 15K	1	
R8685,86		ERJ6GEYJ473	M.RESISTOR CH 1/10W 47K	2	
R8687,88		ERJ6GEYJ332	M.RESISTOR CH 1/10W 3.3K	2	
R8689		ERJ6GEYJ102	M.RESISTOR CH 1/10W 1K	1	
R8690		ERJ6GEYJ272	M.RESISTOR CH 1/10W 2.7K	1	
R8691		ERJ6GEYJ822	M.RESISTOR CH 1/10W 8.2K	1	
R8692		ERJ6GEYJ821	M.RESISTOR CH 1/10W 820	1	
R8693		ERJ6GEYJ152	M.RESISTOR CH 1/10W 1.5K	1	
R8694		ERJ6GEYJ102	M.RESISTOR CH 1/10W 1K	1	
R8696,97		ERJ6GEY0R00	M.RESISTOR CH 1/10W 0	2	
R8701		ERJ6GEY0R00	M.RESISTOR CH 1/10W 0	1	
R8703		ERJ6GEYJ562	M.RESISTOR CH 1/10W 5.6K	1	
R8704		ERJ6GEYJ103	M.RESISTOR CH 1/10W 10K	1	
R8705		ERJ6GEYJ684	M.RESISTOR CH 1/10W 680K	1	
R8706		ERJ6GEYJ103	M.RESISTOR CH 1/10W 10K	1	
R8707		ERJ6GEYJ563	M.RESISTOR CH 1/10W 56K	1	
R8708		ERJ6GEYJ222	M.RESISTOR CH 1/10W 2.2K	1	
R8709		ERJ6GEYJ682	M.RESISTOR CH 1/10W 6.8K	1	
R8710		ERJ6GEYJ104	M.RESISTOR CH 1/10W 100K	1	
R8713		ERJ6GEY0R00	M.RESISTOR CH 1/10W 0	1	
R8715		ERJ6GEY0R00	M.RESISTOR CH 1/10W 0	1	
R8717-21		ERJ6GEYJ101	M.RESISTOR CH 1/10W 100	5	
R8722-27		ERJ6GEYJ560	M.RESISTOR CH 1/10W 56	6	
R8728		ERJ6GEYJ102	M.RESISTOR CH 1/10W 1K	1	
R8729		ERJ6GEYJ152	M.RESISTOR CH 1/10W 1.5K	1	
R8731,32		ERJ6GEYJ560	M.RESISTOR CH 1/10W 56	2	
R8733,34		ERJ6GEYJ471	M.RESISTOR CH 1/10W 470	2	
R8736		ERJ6GEYJ101	M.RESISTOR CH 1/10W 100	1	
R8737		ERJ6GEYJ152	M.RESISTOR CH 1/10W 1.5K	1	
R8739		ERJ6GEY0R00	M.RESISTOR CH 1/10W 0	1	
R8740		ERJ6GEYJ102	M.RESISTOR CH 1/10W 1K	1	
R8741		ERJ6GEYJ104	M.RESISTOR CH 1/10W 100K	1	
R8743		ERJ6GEYJ102	M.RESISTOR CH 1/10W 1K	1	

Ref.No.		Part No.	Part Name & Description	Pcs	Remarks
R8801,02		ERJ6GEYG102	M.RESISTOR CH 1/10W 1K	2	
R8803		ERJ6GEYJ470	M.RESISTOR CH 1/10W 47	1	
R8804		ERJ6GEYJ332	M.RESISTOR CH 1/10W 3.3K	1	
R8805		ERJ6GEYJ103	M.RESISTOR CH 1/10W 10K	1	
R8806		ERJ6GEYJ470	M.RESISTOR CH 1/10W 47	1	
R8807		ERJ6GEYJ821	M.RESISTOR CH 1/10W 820	1	
R8808		ERJ6GEYG472	M.RESISTOR CH 1/10W 4.7K	1	
R8809		ERJ6GEYJ470	M.RESISTOR CH 1/10W 47	1	
R8810-12		ERJ6GEYG102	M.RESISTOR CH 1/10W 1K	3	
R8813		ERJ6GEYJ470	M.RESISTOR CH 1/10W 47	1	
R8814		ERJ6GEYG102	M.RESISTOR CH 1/10W 1K	1	
R8815		ERJ6GEYJ103	M.RESISTOR CH 1/10W 10K	1	
R8816		ERJ6GEYG470	M.RESISTOR CH 1/10W 47	1	
R8817		ERJ6GEYJ821	M.RESISTOR CH 1/10W 820	1	
R8818		ERJ6GEYG472	M.RESISTOR CH 1/10W 4.7K	1	
R8822		ERJ6GEYJ471	M.RESISTOR CH 1/10W 470	1	
R8823		ERJ6GEYJ271	M.RESISTOR CH 1/10W 270	1	
R8824		ERJ6GEYJ470	M.RESISTOR CH 1/10W 47	1	
R8825		ERJ6GEYJ561	M.RESISTOR CH 1/10W 560	1	
R8826		ERJ6GEYJ332	M.RESISTOR CH 1/10W 3.3K	1	
R8827		ERJ6GEYJ122	M.RESISTOR CH 1/10W 1.2K	1	
R8828		ERJ6GEY0R00	M.RESISTOR CH 1/10W 0	1	
R8829		ERJ6GEYJ470	M.RESISTOR CH 1/10W 47	1	
R8830		ERJ6GEYJ332	M.RESISTOR CH 1/10W 3.3K	1	
R8831		ERJ6GEYJ470	M.RESISTOR CH 1/10W 47	1	
R8832		ERJ6GEYJ682	M.RESISTOR CH 1/10W 6.8K	1	
R8833		ERJ6GEYJ102	M.RESISTOR CH 1/10W 1K	1	
R8834		ERJ6GEYJ152	M.RESISTOR CH 1/10W 1.5K	1	
R8836		ERJ6GEYJ561	M.RESISTOR CH 1/10W 560	1	
R8838		ERJ6GEYJ222	M.RESISTOR CH 1/10W 2.2K	1	
R8839		ERJ6GEYJ470	M.RESISTOR CH 1/10W 47	1	
R8840		ERJ6GEYJ103	M.RESISTOR CH 1/10W 10K	1	
R8841		ERJ6GEYJ102	M.RESISTOR CH 1/10W 1K	1	
R8842		ERJ6GEYJ122	M.RESISTOR CH 1/10W 1.2K	1	
R8843		ERJ6GEYJ222	M.RESISTOR CH 1/10W 2.2K	1	
R8844		ERJ6GEY0R00	M.RESISTOR CH 1/10W 0	1	
R8846		ERJ6GEYJ223	M.RESISTOR CH 1/10W 22K	1	
R8849		ERJ6GEY0R00	M.RESISTOR CH 1/10W 0	1	
R8850		ERJ6GEYG103	M.RESISTOR CH 1/10W 10K	1	
R8851		ERJ6GEYG163	M.RESISTOR CH 1/10W 16K	1	
R8853		ERJ6GEYJ332	M.RESISTOR CH 1/10W 3.3K	1	
R8855		ERJ6GEYG103	M.RESISTOR CH 1/10W 10K	1	
R8856		ERJ6GEYG163	M.RESISTOR CH 1/10W 16K	1	
R8859		ERJ6GEY0R00	M.RESISTOR CH 1/10W 0	1	
R8860		ERJ6GEYG301	M.RESISTOR CH 1/10W 300	1	
R8861		ERJ6GEYJ470	M.RESISTOR CH 1/10W 47	1	
R8862		ERJ6GEYG301	M.RESISTOR CH 1/10W 300	1	
R8864		ERJ6GEYG472	M.RESISTOR CH 1/10W 4.7K	1	
R8865		ERJ6GEYJ182	M.RESISTOR CH 1/10W 1.8K	1	
R8866		VRE0034E122	M.RESISTOR CH 1/10W 1.2K	1	
R8867		ERJ6GEY0R00	M.RESISTOR CH 1/10W 0	1	
R8869		ERJ6GEYJ222	M.RESISTOR CH 1/10W 2.2K	1	
R8870		VRE0034E122	M.RESISTOR CH 1/10W 1.2K	1	
R8871		ERJ6GEY0R00	M.RESISTOR CH 1/10W 0	1	
R8873		ERJ6GEYJ222	M.RESISTOR CH 1/10W 2.2K	1	
R8875		ERJ6GEYJ102	M.RESISTOR CH 1/10W 1K	1	
R8876		ERJ6GEYG472	M.RESISTOR CH 1/10W 4.7K	1	
R8877		ERJ6GEYJ471	M.RESISTOR CH 1/10W 470	1	
R8878		ERJ6GEYG472	M.RESISTOR CH 1/10W 4.7K	1	
R8880		ERJ6GEYJ102	M.RESISTOR CH 1/10W 1K	1	
R8881		ERJ6GEYJ821	M.RESISTOR CH 1/10W 820	1	
R8882		ERJ6GEYJ471	M.RESISTOR CH 1/10W 470	1	
R8883		ERJ6GEYG472	M.RESISTOR CH 1/10W 4.7K	1	
R8884		ERJ6GEYJ102	M.RESISTOR CH 1/10W 1K	1	
R8885		ERJ6GEY0R00	M.RESISTOR CH 1/10W 0	1	
R8886		ERJ6GEYJ102	M.RESISTOR CH 1/10W 1K	1	
R8887		ERJ6GEYJ470	M.RESISTOR CH 1/10W 47	1	
R8888		ERJ6GEYJ332	M.RESISTOR CH 1/10W 3.3K	1	
R8889		ERJ6GEYJ102	M.RESISTOR CH 1/10W 1K	1	
R8890		ERJ6GEY0R00	M.RESISTOR CH 1/10W 0	1	
R8891		ERJ6GEYJ470	M.RESISTOR CH 1/10W 47	1	
R8892		ERJ6GEYJ102	M.RESISTOR CH 1/10W 1K	1	
R8893		ERJ6GEYJ332	M.RESISTOR CH 1/10W 3.3K	1	
R8894		ERJ6GEYJ821	M.RESISTOR CH 1/10W 820	1	
R8895		ERJ6GEYG472	M.RESISTOR CH 1/10W 4.7K	1	

Ref.No.	Part No.	Part Name & Description	Pcs	Remarks
R8896	ERJ6GEYJ102	M.RESISTOR CH 1/10W 1K	1	
R8897	ERJ6GEYJ181	M.RESISTOR CH 1/10W 180	1	
R8898	ERJ6GEYJ821	M.RESISTOR CH 1/10W 820	1	
R8899	ERJ6GEYJ152	M.RESISTOR CH 1/10W 1.5K	1	
R8900	ERJ6GEYJ470	M.RESISTOR CH 1/10W 47	1	
R8901	ERJ6GEYJ102	M.RESISTOR CH 1/10W 1K	1	
R8902	ERJ6GEYJ471	M.RESISTOR CH 1/10W 470	1	
R8903	ERJ6GEYJ102	M.RESISTOR CH 1/10W 1K	1	
R8904	ERJ6GEYJ122	M.RESISTOR CH 1/10W 1.2K	1	
R8905	ERJ6GEYJ152	M.RESISTOR CH 1/10W 1.5K	1	
R8906-08	ERJ6GEYJ223	M.RESISTOR CH 1/10W 22K	3	
R8909	ERJ6GEYJ152	M.RESISTOR CH 1/10W 1.5K	1	
R8910	ERJ6GEYJ102	M.RESISTOR CH 1/10W 1K	1	
R8911	ERJ6GEYJ154	M.RESISTOR CH 1/10W 150K	1	
R8912	ERJ6GEYJ182	M.RESISTOR CH 1/10W 1.8K	1	
R8913	ERJ6GEYJ102	M.RESISTOR CH 1/10W 1K	1	
R8914	ERJ6GEYJ122	M.RESISTOR CH 1/10W 1.2K	1	
R8915	ERJ6GEYJ330	M.RESISTOR CH 1/10W 33	1	
R8916	ERJ6GEYJ221	M.RESISTOR CH 1/10W 220	1	
R8917	ERJ6GEYJ105	M.RESISTOR CH 1/10W 1M	1	
R8918	ERJ6GEYJ154	M.RESISTOR CH 1/10W 150K	1	
R8919	ERJ6GEYJ152	M.RESISTOR CH 1/10W 1.5K	1	
R8920	ERJ6GEYJ103	M.RESISTOR CH 1/10W 10K	1	
R8921,22	ERJ6GEYJ102	M.RESISTOR CH 1/10W 1K	2	
R8923	ERJ6GEYJ122	M.RESISTOR CH 1/10W 1.2K	1	
R8924	ERJ6GEY0R00	M.RESISTOR CH 1/10W 0	1	
R8925	ERJ6GEYJ152	M.RESISTOR CH 1/10W 1.5K	1	
R8926	ERJ6GEYJ470	M.RESISTOR CH 1/10W 47	1	
R8928	ERJ6GEYJ103	M.RESISTOR CH 1/10W 10K	1	
R8929	ERJ6GEYJ391	M.RESISTOR CH 1/10W 390	1	
R8930	ERJ6GEYJ181	M.RESISTOR CH 1/10W 180	1	
R8931	ERJ6GEYJ331	M.RESISTOR CH 1/10W 330	1	
R8932	ERJ6GEYJ181	M.RESISTOR CH 1/10W 180	1	
R8933	ERJ6GEYJ103	M.RESISTOR CH 1/10W 10K	1	
R8934-36	ERJ6GEYJ223	M.RESISTOR CH 1/10W 22K	3	
R8937	ERJ6GEYJ470	M.RESISTOR CH 1/10W 47	1	
R8938	ERJ6GEYJ152	M.RESISTOR CH 1/10W 1.5K	1	
R8939	ERJ6GEYJ391	M.RESISTOR CH 1/10W 390	1	
R8940	ERJ6GEYJ102	M.RESISTOR CH 1/10W 1K	1	
R8941	ERJ6GEYG242	M.RESISTOR CH 1/10W 2.4K	1	
R8942	ERJ6GEYJ124	M.RESISTOR CH 1/10W 120K	1	
R8943	ERJ6GEYJ682	M.RESISTOR CH 1/10W 6.8K	1	
R8944	ERJ6GEYJ102	M.RESISTOR CH 1/10W 1K	1	
R8945	ERJ6GEYJ683	M.RESISTOR CH 1/10W 68K	1	
R8947	ERJ6GEYJ104	M.RESISTOR CH 1/10W 100K	1	
R8948	ERJ6GEYJ682	M.RESISTOR CH 1/10W 6.8K	1	
R8952	ERJ6GEYJ471	M.RESISTOR CH 1/10W 470	1	
R8953,54	ERJ6GEYJ101	M.RESISTOR CH 1/10W 100	2	
R8955-57	ERJ6GEYJ332	M.RESISTOR CH 1/10W 3.3K	3	
R8958	ERJ6GEYJ392	M.RESISTOR CH 1/10W 3.9K	1	
R8959-63	ERJ6GEYJ470	M.RESISTOR CH 1/10W 47	5	
R8964,65	ERJ6GEYJ103	M.RESISTOR CH 1/10W 10K	2	
R8966	ERJ6GEYJ470	M.RESISTOR CH 1/10W 47	1	
R8968	ERJ6GEYJ222	M.RESISTOR CH 1/10W 2.2K	1	
R8969	ERJ6GEYJ470	M.RESISTOR CH 1/10W 47	1	
R8971	ERJ6GEYJ471	M.RESISTOR CH 1/10W 470	1	
R8973	ERJ6GEYJ471	M.RESISTOR CH 1/10W 470	1	
R8974	ERJ6GEYJ102	M.RESISTOR CH 1/10W 1K	1	
R8975,76	ERJ6GEYJ105	M.RESISTOR CH 1/10W 1M	2	
R8977,78	ERJ6GEYJ562	M.RESISTOR CH 1/10W 5.6K	2	
R8979	ERJ6GEYJ683	M.RESISTOR CH 1/10W 68K	1	
R8980	ERJ6GEYG912	M.RESISTOR CH 1/10W 9.1K	1	
R8982	ERJ6GEYJ102	M.RESISTOR CH 1/10W 1K	1	
R8983	ERJ6GEYJ152	M.RESISTOR CH 1/10W 1.5K	1	
R8985,86	ERJ6GEY0R00	M.RESISTOR CH 1/10W 0	2	
R8989	ERJ6GEY0R00	M.RESISTOR CH 1/10W 0	1	
SW8701	VSR0045	SWITCH	1	<R>
TH8801	ERTD2FHL102S	THERMISTOR 1K	1	

Ref.No.	Part No.	Part Name & Description	Pcs	Remarks
VC8671	ECV1ZW20X60	V.CAPACITOR 20P	1	
VC8801	ECV1ZW20X60	V.CAPACITOR 20P	1	
VR8601	EVN32CA00B54	V.RESISTOR 50K	1	
VR8602	EVN32CA00B53	V.RESISTOR 5K	1	
VR8603	EVN32CA00B14	V.RESISTOR 10K	1	
VR8604	EVN32CA00B53	V.RESISTOR 5K	1	
VR8701	EVN32CA00B53	V.RESISTOR 5K	1	
VR8801,02	EVN32CA00B14	V.RESISTOR 10K	2	
VR8803	EVN32CA00B13	V.RESISTOR 1K	1	
VR8804	EVN32CA00B23	V.RESISTOR 2K	1	
VR8805	EVN32CA00B24	VARIABLE 20K	1	
VR8806	EVN32CA00B13	V.RESISTOR 1K	1	
VR8807,08	EVN32CA00B23	V.RESISTOR 2K	2	
VR8809	EVN32CA00B13	V.RESISTOR 1K	1	
VR8810,11	EVN32CA00B53	V.RESISTOR 5K	2	
VR8814	EVN32CA00B13	V.RESISTOR 1K	1	
VR8815	EVN32CA00B52	V.RESISTOR 500	1	
X8601	VSX0270	CRYSTAL OSCILLATOR	1	<R>
X8602	VSX0567	CRYSTAL OSCILLATOR	1	<R>
X8671	VSX0114	CRYSTAL OSCILLATOR	1	<R>
		MISCELLANEOUS		
E48	VMZ2228	INSULATER	1	
E49	VSC3973	SHIELD PLATE	1	
E50	XTV3+6FFR	SCREW	2	

Ref.No.		Part No.	Part Name & Description	Pcs	Remarks
		VEP08179A	P.C.BOARD W/COMPONENT		
			TBC (1)		
C8001,02		ECUM1E104ZFN	C.CAPACITOR CH 25V 0.1U	2	
C8003		ECEV1CV100Q	E.CAPACITOR 16V 10U	1	
C8004-09		ECUM1E104ZFN	C.CAPACITOR CH 25V 0.1U	6	
C8012		ECUM1E104ZFN	C.CAPACITOR CH 25V 0.1U	1	
C8014		ECUM1E104ZFN	C.CAPACITOR CH 25V 0.1U	1	
C8019,20		ECUM1E104ZFN	C.CAPACITOR CH 25V 0.1U	2	
C8021		ECEV0JV220Q	E.CAPACITOR 6.3V 22U	1	
C8025		ECUM1E104ZFN	C.CAPACITOR CH 25V 0.1U	1	
C8051,52		ECUM1E104ZFN	C.CAPACITOR CH 25V 0.1U	2	
C8053		ECEV1CV220Q	E.CAPACITOR 16V 22U	1	
C8054		ECUM1E104ZFN	C.CAPACITOR CH 25V 0.1U	1	
C8055		ECEV0JV220Q	E.CAPACITOR 6.3V 22U	1	
C8056		ECUM1E104ZFN	C.CAPACITOR CH 25V 0.1U	1	
C8059		ECEV0JV220Q	E.CAPACITOR 6.3V 22U	1	
C8060		ECUM1E104ZFN	C.CAPACITOR CH 25V 0.1U	1	
C8062,63		ECUM1E104ZFN	C.CAPACITOR CH 25V 0.1U	2	
C8064		ECEV1CV220Q	E.CAPACITOR 16V 22U	1	
C8065		ECUM1E104ZFN	C.CAPACITOR CH 25V 0.1U	1	
C8066		ECEV0JV220Q	E.CAPACITOR 6.3V 22U	1	
C8067		ECEV1HV2R2Q	E.CAPACITOR 50V 2.2U	1	
C8068-79		ECUM1E104ZFN	C.CAPACITOR CH 25V 0.1U	12	
C8101		ECUM1E104ZFN	C.CAPACITOR CH 25V 0.1U	1	
C8102		ECEV1CV220Q	E.CAPACITOR 16V 22U	1	
C8103,04		ECUM1H103KBN	C.CAPACITOR CH 50V 0.01U	2	
C8105		ECUM1H181JCN	C.CAPACITOR CH 50V 180P	1	
C8106		ECUM1H560JCN	C.CAPACITOR CH 50V 56P	1	
C8107		ECEV1CV470Q	E.CAPACITOR CH 16V 47U	1	
C8108		ECEV1EN4R7Q	E.CAPACITOR 25V 4.7U	1	
C8109		ECUM1H121JCN	C.CAPACITOR CH 50V 120P	1	
C8110		ECUM1H390JCN	C.CAPACITOR CH 50V 39P	1	
C8111,12		ECUM1H102JCN	C.CAPACITOR CH 50V 1000P	2	
C8113		ECEV1HN010Q	E.CAPACITOR 50V 1U	1	
C8114,15		ECUM1H103KBN	C.CAPACITOR CH 50V 0.01U	2	
C8116		ECUM1H102JCN	C.CAPACITOR CH 50V 1000P	1	
C8130		ECUM1H221JCN	C.CAPACITOR CH 50V 220P	1	
C8131		ECUM1H102JCN	C.CAPACITOR CH 50V 1000P	1	
C8132		ECUM1E104KBN	C.CAPACITOR CH 25V 0.1U	1	
C8133-35		ECUM1E104ZFN	C.CAPACITOR CH 25V 0.1U	3	
C8136		ECEV0JV220Q	E.CAPACITOR 6.3V 22U	1	
C8137,38		ECUM1H102JCN	C.CAPACITOR CH 50V 1000P	2	
C8139		ECUM1E104ZFN	C.CAPACITOR CH 25V 0.1U	1	
C8151		ECUM1H102JCN	C.CAPACITOR CH 50V 1000P	1	
C8152		ECUM1E104KBN	C.CAPACITOR CH 25V 0.1U	1	
C8153		ECUM1H223KBN	C.CAPACITOR 50V 0.022U	1	
C8154		ECUM1E104ZFN	C.CAPACITOR CH 25V 0.1U	1	
C8155		ECEV1CV220Q	E.CAPACITOR 16V 22U	1	
C8156		ECUM1H561JCN	C.CAPACITOR CH 50V 560P	1	
C8157,58		ECUM1H101JCN	C.CAPACITOR CH 50V 100P	2	
C8159		ECUM1E104ZFN	C.CAPACITOR CH 25V 0.1U	1	
C8160		ECEV0JV220Q	E.CAPACITOR 6.3V 22U	1	
C8161		ECUM1E104ZFN	C.CAPACITOR CH 25V 0.1U	1	
C8162		ECEV0JV220Q	E.CAPACITOR 6.3V 22U	1	
C8163		ECUM1H102JCN	C.CAPACITOR CH 50V 1000P	1	
C8164		ECEV1CN100Q	E.CAPACITOR CH 16V 10U	1	
C8166		ECUM1H561JCN	C.CAPACITOR CH 50V 560P	1	
C8167		ECUM1E104ZFN	C.CAPACITOR CH 25V 0.1U	1	
C8168		ECEV0JV220Q	E.CAPACITOR 6.3V 22U	1	
C8169		ECUM1H103KBN	C.CAPACITOR CH 50V 0.01U	1	
C8170,71		ECUM1E104ZFN	C.CAPACITOR CH 25V 0.1U	2	
C8172		ECUM1H102JCN	C.CAPACITOR CH 50V 1000P	1	
C8173		ECUM1H151JCN	C.CAPACITOR CH 50V 150P	1	
C8174,75		ECUM1H102JCN	C.CAPACITOR CH 50V 1000P	2	
C8176,77		ECUM1E104ZFN	C.CAPACITOR CH 25V 0.1U	2	
C8178		ECUM1H102JCN	C.CAPACITOR CH 50V 1000P	1	
C8179-81		ECUM1E104ZFN	C.CAPACITOR CH 25V 0.1U	3	
C8183,84		ECUM1E104ZFN	C.CAPACITOR CH 25V 0.1U	2	
C8185		ECEV0JV220Q	E.CAPACITOR 6.3V 22U	1	
C8186-89		ECUM1E104ZFN	C.CAPACITOR CH 25V 0.1U	4	
C8190		ECUM1H102JCN	C.CAPACITOR CH 50V 1000P	1	

Ref.No.		Part No.	Part Name & Description	Pcs	Remarks
C8201		ECEV0JV470Q	E.CAPACITOR 6.3V 47U	1	
C8202,03		ECUM1E104ZFN	C.CAPACITOR CH 25V 0.1U	2	
C8204		ECEV0JV470Q	E.CAPACITOR 6.3V 47U	1	
C8205-07		ECUM1E104ZFN	C.CAPACITOR CH 25V 0.1U	3	
C8208		ECUM1E104KBN	C.CAPACITOR CH 25V 0.1U	1	
C8209		ECEV1HVR47Q	E.CAPACITOR 50V 0.47U	1	
C8210		ECEV1CV470Q	E.CAPACITOR CH 16V 47U	1	
C8211-13		ECUM1E104ZFN	C.CAPACITOR CH 25V 0.1U	3	
C8214		ECUM1H080DCN	C.CAPACITOR CH 50V 80P	1	
C8217,18		ECUM1E104ZFN	C.CAPACITOR CH 25V 0.1U	2	
C8219		ECEV0JV470Q	E.CAPACITOR 6.3V 47U	1	
C8220		ECUM1E104ZFN	C.CAPACITOR CH 25V 0.1U	1	
C8221		ECEV1CV470Q	E.CAPACITOR CH 16V 47U	1	
C8222		ECUM1E104ZFN	C.CAPACITOR CH 25V 0.1U	1	
C8223		ECEV0JV470Q	E.CAPACITOR 6.3V 47U	1	
C8224		ECUM1E104ZFN	C.CAPACITOR CH 25V 0.1U	1	
C8225		ECEV0JV470Q	E.CAPACITOR 6.3V 47U	1	
C8226		ECUM1E104ZFN	C.CAPACITOR CH 25V 0.1U	1	
C8227		ECEV0JV470Q	E.CAPACITOR 6.3V 47U	1	
C8228-32		ECUM1E104ZFN	C.CAPACITOR CH 25V 0.1U	5	
C8233		ECEV1HVR47Q	E.CAPACITOR 50V 0.47U	1	
C8234		ECEV1CV470Q	E.CAPACITOR CH 16V 47U	1	
C8235		ECUM1E104ZFN	C.CAPACITOR CH 25V 0.1U	1	
C8236		ECUM1H050CCN	C.CAPACITOR CH 50V 5P	1	
C8237		ECUM1E104ZFN	C.CAPACITOR CH 25V 0.1U	1	
C8238		ECUM1H221JCN	C.CAPACITOR CH 50V 220P	1	
C8239-42		ECUM1E104ZFN	C.CAPACITOR CH 25V 0.1U	4	
C8243		ECEV1HVR47Q	E.CAPACITOR 50V 0.47U	1	
C8244		ECEV1CV470Q	E.CAPACITOR CH 16V 47U	1	
C8245		ECUM1H050CCN	C.CAPACITOR CH 50V 5P	1	
C8246		ECUM1H221JCN	C.CAPACITOR CH 50V 220P	1	
C8247		ECUM1E104ZFN	C.CAPACITOR CH 25V 0.1U	1	
C8248		ECEV0JV470Q	E.CAPACITOR 6.3V 47U	1	
C8249		ECUM1H100DCN	C.CAPACITOR CH 50V 10P	1	
C8250-52		ECEV1HV010Q	E.CAPACITOR 50V 1U	3	
C8253		ECEV1HV3R3Q	E.CAPACITOR 50V 3.3U	1	
C8254-56		ECUM1H103KBN	C.CAPACITOR CH 50V 0.01U	3	
C8257,58		ECUM1E104KBN	C.CAPACITOR CH 25V 0.1U	2	
C8259,60		ECUM1H221JCN	C.CAPACITOR CH 50V 220P	2	
C8261		ECUM1H331JCN	C.CAPACITOR CH 50V 330P	1	
C8262		ECUM1E104ZFN	C.CAPACITOR CH 25V 0.1U	1	
C8263		ECEV1HN3R3Q	E.CAPACITOR 50V 3.3U	1	
C8265		ECUM1E104ZFN	C.CAPACITOR CH 25V 0.1U	1	
C8266		ECUM1H103KBN	C.CAPACITOR CH 50V 0.01U	1	
C8267		ECEV0JV470Q	E.CAPACITOR 6.3V 47U	1	
C8268		ECUM1E104ZFN	C.CAPACITOR CH 25V 0.1U	1	
C8269		ECUM1E104KBN	C.CAPACITOR CH 25V 0.1U	1	
C8270		ECEV1HVR47Q	E.CAPACITOR 50V 0.47U	1	
C8271,72		ECEV1CV470Q	E.CAPACITOR CH 16V 47U	2	
C8301		ECUM1E104ZFN	C.CAPACITOR CH 25V 0.1U	1	
C8303-09		ECUM1E104ZFN	C.CAPACITOR CH 25V 0.1U	7	
C8310		ECUM1H050CCN	C.CAPACITOR CH 50V 5P	1	
C8311		ECUM1E104ZFN	C.CAPACITOR CH 25V 0.1U	1	
C8313		ECUM1E104ZFN	C.CAPACITOR CH 25V 0.1U	1	
C8314		ECEV0JV470Q	E.CAPACITOR 6.3V 47U	1	
C8315,16		ECUM1E104ZFN	C.CAPACITOR CH 25V 0.1U	2	
C8317		ECEV0JV470Q	E.CAPACITOR 6.3V 47U	1	
C8318-20		ECUM1E104ZFN	C.CAPACITOR CH 25V 0.1U	3	
C8322-27		ECUM1E104ZFN	C.CAPACITOR CH 25V 0.1U	6	
C8328		ECUM1H102JCN	C.CAPACITOR CH 50V 1000P	1	
C8329		ECUM1H050CCN	C.CAPACITOR CH 50V 5P	1	
C8401-09		ECUM1E104ZFN	C.CAPACITOR CH 25V 0.1U	9	
C8410		ECUM1H270JCN	C.CAPACITOR CH 50V 27P	1	
C8411		ECUM1E104KBN	C.CAPACITOR CH 25V 0.1U	1	
C8412		ECUM1E104ZFN	C.CAPACITOR CH 25V 0.1U	1	
C8501,02		ECUM1E104ZFN	C.CAPACITOR CH 25V 0.1U	2	
C8512		ECUM1E104ZFN	C.CAPACITOR CH 25V 0.1U	1	
C8514		ECUM1E104ZFN	C.CAPACITOR CH 25V 0.1U	1	
C8520,21		ECUM1H220JCN	C.CAPACITOR CH 50V 22P	2	
C8523-25		ECUM1E104ZFN	C.CAPACITOR CH 25V 0.1U	3	
D8001,02		MA151K	DIODE	2	<R>
D8053		MA3051-L	DIODE	1	<R>

Ref.No.		Part No.	Part Name & Description	Pcs	Remarks
D8054		MA3033-L	DIODE	1	<R>
D8101		MA151WK	DIODE	1	<R>
D8151		MA151K	DIODE	1	<R>
D8153		MA335-R	DIODE	1	<R>
D8154,55		MA151K	DIODE	2	<R>
D8156		MA153	DIODE	1	<R>
D8201-05		MA736	DIODE	5	<R>
D8550,51		11EQS04	DIODE	2	<R>
FL8201		VLF1015	FILTER	1	
FL8202,03		VLF1289	FILTER	2	
FL8550,51		VLF1016A223	FILTER	2	
FL8553-55		VLF1016A223	FILTER	3	
FL8556-58		VLF1016A470	FILTER	3	
FL8560		VLF1016A223	FILTER	1	
FL8561-63		VLF1016A470	FILTER	3	
FL8564-67		VLF1016A223	FILTER	4	
IC8001		CXD1175AM	IC	1	<R>
IC8002		MC74HC574AF	IC	1	<R>
IC8003		MN53030VMB	IC	1	<R>
IC8004,05		MB81C1501PF	IC	2	<R>
IC8006		TC7WU04F	IC	1	<R>
IC8011		MC74HC86F	IC	1	<R>
IC8012		MN1382-R	IC	1	<R>
IC8016		NJM78L05UA	IC	1	<R>
IC8051		NJM78L09UA	IC	1	<R>
IC8052		AN78L05	IC	1	<R>
IC8053-55		NJM4565MD	IC	3	<R>
IC8056		MC74HC574AF	IC	1	<R>
IC8057		MB40778PF	IC	1	<R>
IC8102		SN74LS123NS	IC	1	<R>
IC8103		74F74SJ	IC	1	<R>
IC8104		SN74LS123NS	IC	1	<R>
IC8105		TC7S00F	IC	1	<R>
IC8106,07		TC7S14F	IC	2	<R>
IC8109		AN91A12S	IC	1	<R>
IC8111		SN74LS221NS	IC	1	<R>
IC8151		MC74HC4053F	IC	1	<R>
IC8152-54		NJM062M	IC	3	<R>
IC8155		SN74LS123NS	IC	1	<R>
IC8156		SN74LS221NS	IC	1	<R>
IC8157		MC1648P	IC	1	<R>
IC8158		MC74HC04AF	IC	1	<R>
IC8160		SC371026FU	IC	1	<R>
IC8161		SN74LS221NS	IC	1	<R>
IC8201		NJM082BM	IC	1	<R>
IC8202		TC7S66F	IC	1	<R>
IC8203		AD817AR	IC	1	<R>
IC8204		TC7S66F	IC	1	<R>
IC8205		NJM78L09UA	IC	1	<R>
IC8206		NJM082BM	IC	1	<R>
IC8207		AD826AR	IC	1	<R>
IC8208		NJM082BM	IC	1	<R>
IC8209		TC7S66F	IC	1	<R>
IC8210		AN78L05	IC	1	<R>
IC8211		AN3171S	IC	1	<R>
IC8301		UPD65640B168	IC	1	<R>
IC8302		SC371026FU	IC	1	<R>
IC8303		MB81C1501PF	IC	1	<R>
IC8306		MC74HC86F	IC	1	<R>
IC8307		TC7S32F	IC	1	<R>
IC8308		NJM78L05UA	IC	1	<R>
IC8309		MC74HC4053F	IC	1	<R>
IC8312		AN78L05	IC	1	<R>
IC8401		CG24143-4403	IC	1	<R>
IC8402		TC7S32F	IC	1	<R>
IC8403		TC7S08F	IC	1	<R>
IC8404		SN74LS221NS	IC	1	<R>
IC8405		TC7W32F	IC	1	<R>
IC8501		SC371026FU	IC	1	<R>

Ref.No.		Part No.	Part Name & Description	Pcs	Remarks
IC8504		MC74HC74AF	IC	1	<R>
IC8506		TC7WU04F	IC	1	<R>
IC8551,52		TC7S08F	IC	2	<R>
L8001		VLQ0319K101	COIL 100UH	1	
L8002		VLF1016A223	FILTER	1	
L8052,53		VLQ0319K101	COIL 100UH	2	
L8101		VLQ0319K101	COIL 100UH	1	
L8102		VLQ0133J471	COIL 470UH	1	
L8151-54		VLQ0319K470	COIL 47UH	4	
L8155		VLQ0163J1R2	COIL	1	
L8156		VLQ0319K470	COIL 47UH	1	
L8201-04		VLQ0319K101	COIL 100UH	4	
L8301		VLQ0163J6R8	COIL 6.8UH	1	
L8550,51		VLQ0319K1R0	COIL 1UH	2	
P8551		VJP3176B100	CONNECTOR	1	
Q8151,52		MSD601-R	TRANSISTOR	2	<R>
Q8153		MSB709-R	TRANSISTOR	1	<R>
Q8201-10		MSD601-R	TRANSISTOR	10	<R>
R8001,02		ERJ8GCY0R00	M.RESISTOR CH 1/8W 0	2	
R8009		ERJ6GEYJ103	M.RESISTOR CH 1/10W 10K	1	
R8010,11		ERJ6GEY0R00	M.RESISTOR CH 1/10W 0	2	
R8051		ERJ6GEYJ303	M.RESISTOR CH 1/16W 30K	1	
R8052		ERJ6GEYJ103	M.RESISTOR CH 1/10W 10K	1	
R8053		ERJ6GEYG153	M.RESISTOR CH 1/10W 15K	1	
R8055		ERJ6GEYG153	M.RESISTOR CH 1/10W 15K	1	
R8056		ERJ6GEYJ272	M.RESISTOR CH 1/10W 2.7K	1	
R8057		ERJ6GEYG333	M.RESISTOR CH 1/10W 33K	1	
R8060		ERJ6GEYG203	M.RESISTOR CH 1/10W 20K	1	
R8064		ERJ6GEYJ223	M.RESISTOR CH 1/10W 22K	1	
R8066		ERJ6GEYJ471	M.RESISTOR CH 1/10W 470	1	
R8067		ERJ6GEYJ223	M.RESISTOR CH 1/10W 22K	1	
R8072-79		ERJ6GEYJ152	M.RESISTOR CH 1/10W 1.5K	8	
R8080,81		ERJ6GEYJ105	M.RESISTOR CH 1/10W 1M	2	
R8082		ERJ6GEYJ103	M.RESISTOR CH 1/10W 10K	1	
R8083		ERJ6GEYJ392	M.RESISTOR CH 1/10W 3.9K	1	
R8084		ERJ6GEYJ183	M.RESISTOR CH 1/10W 18K	1	
R8085		ERJ6GEYJ332	M.RESISTOR CH 1/10W 3.3K	1	
R8087-94		ERJ6GEYJ152	M.RESISTOR CH 1/10W 1.5K	8	
R8095-97		ERJ6GEY0R00	M.RESISTOR CH 1/10W 0	3	
R8101		ERJ6GEYJ224	M.RESISTOR CH 1/10W 220K	1	
R8102		ERJ6GEYJ103	M.RESISTOR CH 1/10W 10K	1	
R8103		ERJ6GEYJ822	M.RESISTOR CH 1/10W 8.2K	1	
R8104		ERJ6GEYJ113	M.RESISTOR CH 1/10W 11K	1	
R8105		ERJ6GEYJ223	M.RESISTOR CH 1/10W 22K	1	
R8106		ERJ6GEYJ222	M.RESISTOR CH 1/10W 2.2K	1	
R8107		ERJ6GEYG333	M.RESISTOR CH 1/10W 33K	1	
R8108-10		ERJ6GEYJ222	M.RESISTOR CH 1/10W 2.2K	3	
R8111		ERJ6GEYJ123	M.RESISTOR CH 1/10W 12K	1	
R8112		ERJ6GEYJ273	M.RESISTOR CH 1/10W 27K	1	
R8113		ERJ6GEYJ223	M.RESISTOR CH 1/10W 22K	1	
R8119		ERJ6GEYJ471	M.RESISTOR CH 1/10W 470	1	
R8120,21		ERJ6GEYJ103	M.RESISTOR CH 1/10W 10K	2	
R8122		ERJ6GEYJ222	M.RESISTOR CH 1/10W 2.2K	1	
R8151		ERJ6GEYJ101	M.RESISTOR CH 1/10W 100	1	
R8152		ERJ6GEYJ273	M.RESISTOR CH 1/10W 27K	1	
R8153		ERJ6GEYJ183	M.RESISTOR CH 1/10W 18K	1	
R8154,55		ERJ6GEYJ562	M.RESISTOR CH 1/10W 5.6K	2	
R8156		ERJ6GEYJ182	M.RESISTOR CH 1/10W 1.8K	1	
R8157		ERJ6GEYJ102	M.RESISTOR CH 1/10W 1K	1	
R8158		ERJ6GEYG153	M.RESISTOR CH 1/10W 15K	1	
R8159		ERJ6GEYJ332	M.RESISTOR CH 1/10W 3.3K	1	
R8160		ERJ6GEYJ102	M.RESISTOR CH 1/10W 1K	1	
R8161		ERJ6GEYJ104	M.RESISTOR CH 1/10W 100K	1	

Ref.No.		Part No.	Part Name & Description	Pcs	Remarks
R8162		ERJ6GEYJ821	M.RESISTOR CH 1/10W 820	1	
R8163		ERJ6GEYJ102	M.RESISTOR CH 1/10W 1K	1	
R8164		ERJ6GEYJ123	M.RESISTOR CH 1/10W 12K	1	
R8165		ERJ6GEYJ821	M.RESISTOR CH 1/10W 820	1	
R8166		ERJ6GEYG153	M.RESISTOR CH 1/10W 15K	1	
R8167		ERJ6GEYJ182	M.RESISTOR CH 1/10W 1.8K	1	
R8168		ERJ6GEYG153	M.RESISTOR CH 1/10W 15K	1	
R8169		ERJ6GEYJ332	M.RESISTOR CH 1/10W 3.3K	1	
R8170		ERJ6GEYJ562	M.RESISTOR CH 1/10W 5.6K	1	
R8171		ERJ6GEYJ182	M.RESISTOR CH 1/10W 1.8K	1	
R8172		ERJ6GEYJ222	M.RESISTOR CH 1/10W 2.2K	1	
R8173		ERJ6GEY0R00	M.RESISTOR CH 1/10W 0	1	
R8174		ERJ6GEYJ182	M.RESISTOR CH 1/10W 1.8K	1	
R8175,76		ERJ6GEY0R00	M.RESISTOR CH 1/10W 0	2	
R8177		ERJ6GEYJ222	M.RESISTOR CH 1/10W 2.2K	1	
R8201		ERJ6GEY0R00	M.RESISTOR CH 1/10W 0	1	
R8202		ERJ6GEYG333	M.RESISTOR CH 1/10W 33K	1	
R8203		ERJ6GEYJ123	M.RESISTOR CH 1/10W 12K	1	
R8204		ERJ6GEYJ152	M.RESISTOR CH 1/10W 1.5K	1	
R8205		ERJ6GEYJ273	M.RESISTOR CH 1/10W 27K	1	
R8206		ERJ6GEYJ152	M.RESISTOR CH 1/10W 1.5K	1	
R8207		ERJ6GEYJ102	M.RESISTOR CH 1/10W 1K	1	
R8208		ERJ6GEYJ224	M.RESISTOR CH 1/10W 220K	1	
R8209		ERJ6GEY0R00	M.RESISTOR CH 1/10W 0	1	
R8210		ERJ6GEYJ223	M.RESISTOR CH 1/10W 22K	1	
R8211		ERJ6GEY0R00	M.RESISTOR CH 1/10W 0	1	
R8212		ERJ6GEYJ392	M.RESISTOR CH 1/10W 3.9K	1	
R8213		ERJ6GEYJ104	M.RESISTOR CH 1/10W 100K	1	
R8214		ERJ6GEYJ273	M.RESISTOR CH 1/10W 27K	1	
R8215		ERJ6GEYJ102	M.RESISTOR CH 1/10W 1K	1	
R8216		ERJ6GEYJ105	M.RESISTOR CH 1/10W 1M	1	
R8217		ERJ6GEYJ392	M.RESISTOR CH 1/10W 3.9K	1	
R8218		ERJ6GEY0R00	M.RESISTOR CH 1/10W 0	1	
R8219		ERJ6GEYJ101	M.RESISTOR CH 1/10W 100	1	
R8220,21		ERJ6GEY0R00	M.RESISTOR CH 1/10W 0	2	
R8222		ERJ6GEYJ273	M.RESISTOR CH 1/10W 27K	1	
R8223		ERJ6GEYJ152	M.RESISTOR CH 1/10W 1.5K	1	
R8224		ERJ6GEYJ102	M.RESISTOR CH 1/10W 1K	1	
R8225		ERJ6GEYJ224	M.RESISTOR CH 1/10W 220K	1	
R8226		ERJ6GEYJ223	M.RESISTOR CH 1/10W 22K	1	
R8227		ERJ6GEY0R00	M.RESISTOR CH 1/10W 0	1	
R8228		ERJ6GEYJ223	M.RESISTOR CH 1/10W 22K	1	
R8229		ERJ6GEY0R00	M.RESISTOR CH 1/10W 0	1	
R8230		ERJ6GEYJ392	M.RESISTOR CH 1/10W 3.9K	1	
R8231		ERJ6GEYJ273	M.RESISTOR CH 1/10W 27K	1	
R8232		ERJ6GEYJ473	M.RESISTOR CH 1/10W 47K	1	
R8233		ERJ6GEYJ152	M.RESISTOR CH 1/10W 1.5K	1	
R8234		ERJ6GEYJ105	M.RESISTOR CH 1/10W 1M	1	
R8235		ERJ6GEYJ103	M.RESISTOR CH 1/10W 10K	1	
R8236		ERJ6GEY0R00	M.RESISTOR CH 1/10W 0	1	
R8237		ERJ6GEYJ101	M.RESISTOR CH 1/10W 100	1	
R8238		ERJ6GEYJ273	M.RESISTOR CH 1/10W 27K	1	
R8239		ERJ6GEYJ152	M.RESISTOR CH 1/10W 1.5K	1	
R8240		ERJ6GEYJ102	M.RESISTOR CH 1/10W 1K	1	
R8241		ERJ6GEYJ224	M.RESISTOR CH 1/10W 220K	1	
R8242		ERJ6GEY0R00	M.RESISTOR CH 1/10W 0	1	
R8243		ERJ6GEYJ392	M.RESISTOR CH 1/10W 3.9K	1	
R8244		ERJ6GEY0R00	M.RESISTOR CH 1/10W 0	1	
R8245		ERJ6GEYJ473	M.RESISTOR CH 1/10W 47K	1	
R8246		ERJ6GEYJ273	M.RESISTOR CH 1/10W 27K	1	
R8247		ERJ6GEYJ152	M.RESISTOR CH 1/10W 1.5K	1	
R8248		ERJ6GEYG153	M.RESISTOR CH 1/10W 15K	1	
R8249		ERJ6GEY0R00	M.RESISTOR CH 1/10W 0	1	
R8250		ERJ6GEYJ101	M.RESISTOR CH 1/10W 100	1	
R8251		ERJ6GEYJ393	M.RESISTOR CH 1/10W 39K	1	
R8252		ERJ6GEYJ473	M.RESISTOR CH 1/10W 47K	1	
R8253		ERJ6GEYG333	M.RESISTOR CH 1/10W 33K	1	
R8254		ERJ6GEYJ103	M.RESISTOR CH 1/10W 10K	1	
R8255		ERJ6GEYJ223	M.RESISTOR CH 1/10W 22K	1	
R8256		ERJ6GEYJ331	M.RESISTOR CH 1/10W 330	1	
R8257		ERJ6GEYJ683	M.RESISTOR CH 1/10W 68K	1	
R8259		ERJ6GEYJ103	M.RESISTOR CH 1/10W 10K	1	
R8260		ERJ6GEYJ154	M.RESISTOR CH 1/10W 150K	1	
R8261		ERJ6GEYG153	M.RESISTOR CH 1/10W 15K	1	
R8262		ERJ6GEYG333	M.RESISTOR CH 1/10W 33K	1	

Ref.No.		Part No.	Part Name & Description	Pcs	Remarks
R8263		ERJ6GEYJ124	M.RESISTOR CH 1/10W 120K	1	
R8264		ERJ6GEYJ272	M.RESISTOR CH 1/10W 2.7K	1	
R8265		ERJ6GEYJ182	M.RESISTOR CH 1/10W 1.8K	1	
R8266		ERJ6GEY0R00	M.RESISTOR CH 1/10W 0	1	
R8267		ERJ6GEYJ101	M.RESISTOR CH 1/10W 100	1	
R8268		ERJ6GEYJ102	M.RESISTOR CH 1/10W 1K	1	
R8269		ERJ6GEYJ151	M.RESISTOR CH 1/10W 150	1	
R8270		ERJ6GEYJ102	M.RESISTOR CH 1/10W 1K	1	
R8271		ERJ6GEYJ222	M.RESISTOR CH 1/10W 2.2K	1	
R8272		ERJ6GEYJ391	M.RESISTOR CH 1/10W 390	1	
R8273		ERJ6GEYJ680	M.RESISTOR CH 1/10W 68	1	
R8274		ERJ6GEYJ105	M.RESISTOR CH 1/10W 1M	1	
R8275		ERJ6GEYJ750	M.RESISTOR CH 1/10W 75	1	
R8303		ERJ6GEYJ222	M.RESISTOR CH 1/10W 2.2K	1	
R8304		ERJ6GEYJ392	M.RESISTOR CH 1/10W 3.9K	1	
R8305		ERJ6GEYJ561	M.RESISTOR CH 1/10W 560	1	
R8311		ERJ6GEYJ182	M.RESISTOR CH 1/10W 1.8K	1	
R8313,14		ERJ6GEY0R00	M.RESISTOR CH 1/10W 0	2	
R8316,17		ERJ6GEY0R00	M.RESISTOR CH 1/10W 0	2	
R8319		ERJ6GEYJ102	M.RESISTOR CH 1/10W 1K	1	
R8320		ERJ6GEYJ104	M.RESISTOR CH 1/10W 100K	1	
R8322		ERJ6GEYJ103	M.RESISTOR CH 1/10W 10K	1	
R8401,02		ERJ6GEY0R00	M.RESISTOR CH 1/10W 0	2	
R8404		ERJ6GEY0R00	M.RESISTOR CH 1/10W 0	1	
R8405		ERJ6GEYJ101	M.RESISTOR CH 1/10W 100	1	
R8407-12		ERJ6GEY0R00	M.RESISTOR CH 1/10W 0	6	
R8414-16		ERJ6GEY0R00	M.RESISTOR CH 1/10W 0	3	
R8417		ERJ6GEYJ393	M.RESISTOR CH 1/10W 39K	1	
R8418		ERJ6GEYJ103	M.RESISTOR CH 1/10W 10K	1	
R8501,02		ERJ6GEY0R00	M.RESISTOR CH 1/10W 0	2	
R8520		ERJ6GEYJ105	M.RESISTOR CH 1/10W 1M	1	
R8521,22		ERJ6GEY0R00	M.RESISTOR CH 1/10W 0	2	
R8551-53		ERJ6GEYJ101	M.RESISTOR CH 1/10W 100	3	
R8554-56		ERJ6GEYJ471	M.RESISTOR CH 1/10W 470	3	
R8557-60		ERJ6GEYJ101	M.RESISTOR CH 1/10W 100	4	
R8561-65		ERJ6GEYJ471	M.RESISTOR CH 1/10W 470	5	
R8567-69		ERJ6GEYJ101	M.RESISTOR CH 1/10W 100	3	
R8570-75		ERJ6GEYJ471	M.RESISTOR CH 1/10W 470	6	
R8577		ERJ6GEYJ101	M.RESISTOR CH 1/10W 100	1	
R8578-81		ERJ6GEYJ471	M.RESISTOR CH 1/10W 470	4	
R8582		ERJ6GEYJ101	M.RESISTOR CH 1/10W 100	1	
R8584,85		ERJ6GEYJ471	M.RESISTOR CH 1/10W 470	2	
R8586-88		ERJ6GEYJ101	M.RESISTOR CH 1/10W 100	3	
R8589		ERJ6GEYJ471	M.RESISTOR CH 1/10W 470	1	
R8590-92		ERJ8GCY0R00	M.RESISTOR CH 1/8W 0	3	
R8593		ERJ6GEYJ101	M.RESISTOR CH 1/10W 100	1	
R8594		ERJ6GEYJ471	M.RESISTOR CH 1/10W 470	1	
TH8201		ERTD2FGL102S	THERMISTOR 1K	1	
VC8501		ECV1ZW20X60	V.CAPACITOR 20P	1	
VR8001		EVN32CA00B53	V.RESISTOR 5K	1	
VR8002		EVN32CA00B23	V.RESISTOR 2K	1	
VR8151,52		EVN32CA00B23	V.RESISTOR 2K	2	
VR8201		EVN32CA00B53	V.RESISTOR 5K	1	
VR8202		EVN32CA00B13	V.RESISTOR 1K	1	
VR8203		EVN32CA00B53	V.RESISTOR 5K	1	
VR8204,05		EVN32CA00B13	V.RESISTOR 1K	2	
VR8206		EVN32CA00B24	VARIABLE 20K	1	
VR8207		EVN32CA00B14	V.RESISTOR 10K	1	
VR8301,02		EVN32CA00B13	V.RESISTOR 1K	2	
X8201		VSX0225	CRYSTAL OSCILLATOR	1	<R>
X8502		VSX0795	CRYSTAL OSCILLATOR	1	<R>

Ref.No.	Part No.	Part Name & Description	Pcs	Remarks
	VEP04424A	P.C.BOARD W/COMPONENT		
		XLR M		
C6710-13	ECKF1H103ZF	C.CAPACITOR 50V 0.01U	4	
J6722-25	VJP3417	CONNECTOR	4	
P6706	VJP1246T	CONNECTOR (MALE) 6P	1	
P6707	VJP1247T	CONNECTOR (MALE) 7P	1	
	VEP04425A	P.C.BOARD W/COMPONENT		AG-8700E
		XLR F		
C6714-17	ECKF1H103ZF	C.CAPACITOR 50V 0.01U	4	
J6726-29	VJS3417	CONNECTOR	4	
P6708	VJP1246T	CONNECTOR (MALE) 6P	1	
P6709	VJP1247T	CONNECTOR (MALE) 7P	1	
	VEP06906A	P.C.BOARD W/COMPONENT		
		9P CONNECT		
P69005	VJP3076	CONNECTOR	1	
P69006	VJS2074	CONNECTOR	1	
		MISCELLANEOUS		
E85	VMP4229	CONNECTOR ANGLE	1	
	XSB3+6	SCREW	1	
E41	XYE3+EF8FZ	SCREW	1	

Ref.No.	Part No.	Part Name & Description	Pcs	Remarks
	VEP06908E	P.C.BOARD W/COMPONENT		AG-8700E
		REAR AMP		
C4001-04	ECEV1CN100Q	E.CAPACITOR CH 16V 10U	4	
C4007-10	ECEV1CN100Q	E.CAPACITOR CH 16V 10U	4	
C4014,15	ECEV1CV470Q	E.CAPACITOR CH 16V 47U	2	
C4016	ECEA1CKS470	E.CAPACITOR 16V 47U	1	
C4017	ECEA1CKS101	E.CAPACITOR 16V 100U	1	
C4018	ECEA1CKA470	E.CAPACITOR 16V 47U	1	
C4019	ECEA1CKA101	E.CAPACITOR 16V 100U	1	
C4020	ECEA1CSN100	E.CAPACITOR 16V 10U	1	
C4021	ECEA1EKA470	E.CAPACITOR 25V 47U	1	
C4022	ECEA1VKS470	E.CAPACITOR 35V 47U	1	
C4023	ECEA1CSN100	E.CAPACITOR 16V 10U	1	
C4024,25	ECEA1EKA470	E.CAPACITOR 25V 47U	2	
C4026	ECEA1CSN100	E.CAPACITOR 16V 10U	1	
C4027,28	ECEA1EKA470	E.CAPACITOR 25V 47U	2	
C4029	ECEA1CSN100	E.CAPACITOR 16V 10U	1	
C4030,31	ECEA1EKA470	E.CAPACITOR 25V 47U	2	
C4034	ECEA1CKS101	E.CAPACITOR 16V 100U	1	
C4035	ECEA1CKA220	E.CAPACITOR 16V 22U	1	
C4036-41	ECEA1CKA100	E.CAPACITOR 16V 10U	6	
C4042,43	ECEA1CKS100	E.CAPACITOR 16V 10U	2	
C4044,45	ECEV1CV470Q	E.CAPACITOR CH 16V 47U	2	
C4046-49	ECUM1H330JCN	C.CAPACITOR CH 50V 33P	4	
C4050,51	ECEV1CV470Q	E.CAPACITOR CH 16V 47U	2	
C6601,02	ECEA1AKA470	E.CAPACITOR 10V 47U	2	
C6604	ECUM1E104ZFN	C.CAPACITOR CH 25V 0.1U	1	
C6605	ECEA1AKA101	E.CAPACITOR 10V 100U	1	
C6606,07	ECUM1E104ZFN	C.CAPACITOR CH 25V 0.1U	2	
C6611	ECUM1H103ZFN	C.CAPACITOR 50V 0.01U	1	
C6612	ECEA0JKS470	E.CAPACITOR 6.3V 47U	1	
C6613	ECUM1H103ZFN	C.CAPACITOR 50V 0.01U	1	
C6614	ECEA0JKS470	E.CAPACITOR 6.3V 47U	1	
C6615	ECUM1H103ZFN	C.CAPACITOR 50V 0.01U	1	
C6616	ECEA1CKA470	E.CAPACITOR 16V 47U	1	
C6621,22	ECUM1H103ZFN	C.CAPACITOR 50V 0.01U	2	
C6623	ECEA0JKS470	E.CAPACITOR 6.3V 47U	1	
C6624	ECEA0JKA470	E.CAPACITOR 6.3V 47U	1	
C6628-36	ECUM1E104ZFN	C.CAPACITOR CH 25V 0.1U	9	
C6637-39	ECEA0JKN470	E.CAPACITOR 6.3V 47U	3	
C6640	ECUM1E104ZFN	C.CAPACITOR CH 25V 0.1U	1	
C6641	ECEA0JKA470	E.CAPACITOR 6.3V 47U	1	
C6642	ECUM1H103ZFN	C.CAPACITOR 50V 0.01U	1	
C6643	ECEA1HKS4R7	E.CAPACITOR 50V 4.7U	1	
C6644	ECEA0JKA470	E.CAPACITOR 6.3V 47U	1	
C6645	ECUM1H103ZFN	C.CAPACITOR 50V 0.01U	1	
C6646	ECEA0JKA470	E.CAPACITOR 6.3V 47U	1	
C6647	ECEA0JKS470	E.CAPACITOR 6.3V 47U	1	
C6648	ECUM1H103ZFN	C.CAPACITOR 50V 0.01U	1	
C6649	ECEA0JKA470	E.CAPACITOR 6.3V 47U	1	
C6650	ECEA1HKAR22	E.CAPACITOR 50V 0.22U	1	
C6651	ECUM1H150JCN	C.CAPACITOR CH 50V 15P	1	
C6652	ECUM1H270JCN	C.CAPACITOR CH 50V 27P	1	
C6653,54	ECUM1H220JCN	C.CAPACITOR CH 50V 22P	2	
C6655,56	ECUM1H390JCN	C.CAPACITOR CH 50V 39P	2	
C6657	ECUM1H103ZFN	C.CAPACITOR 50V 0.01U	1	
C6658	ECEA0JKS470	E.CAPACITOR 6.3V 47U	1	
C6659	ECUM1H103ZFN	C.CAPACITOR 50V 0.01U	1	
C6660	ECEA0JKA470	E.CAPACITOR 6.3V 47U	1	
C6661	ECUM1H102KBN	C.CAPACITOR CH 50V 1000P	1	
C6662-64	ECUM1E104ZFN	C.CAPACITOR CH 25V 0.1U	3	
C6665	ECUM1H103ZFN	C.CAPACITOR 50V 0.01U	1	
C6667,68	ECUM1H270JCN	C.CAPACITOR CH 50V 27P	2	
C6670,71	ECUM1H270JCN	C.CAPACITOR CH 50V 27P	2	
C6672,73	ECUM1E104ZFN	C.CAPACITOR CH 25V 0.1U	2	
C6674	ECUM1H270JCN	C.CAPACITOR CH 50V 27P	1	
C6675	ECUM1H150JCN	C.CAPACITOR CH 50V 15P	1	
C6676-78	ECUM1E104ZFN	C.CAPACITOR CH 25V 0.1U	3	
C6679	ECCF1H121JC	C.CAPACITOR 50V 120P	1	

Ref.No.	Part No.	Part Name & Description	Pcs	Remarks
CT6601	ECV1ZW20X60	V.CAPACITOR 20P	1	
D4001	MA151WA	DIODE	1	<R>
D4002	MA151WK	DIODE	1	<R>
D4003	MA151WA	DIODE	1	<R>
D4004	MA151WK	DIODE	1	<R>
D4005	MA151WA	DIODE	1	<R>
D4006	MA151WK	DIODE	1	<R>
D4007	MA151WA	DIODE	1	<R>
D4008	MA151WK	DIODE	1	<R>
D4017	MA153A	DIODE	1	<R>
D6601,02	MA151K	DIODE	2	<R>
D6603	MA28W-AB	DIODE	1	<R>
IC4001-03	NJM4556MB	IC	3	<R>
IC4004	AN6558S	IC	1	<R>
IC4005-07	NJM4556MB	IC	3	<R>
IC4008	AN6558S	IC	1	<R>
IC4014-17	NJM4556MB	IC	4	<R>
IC6601	NJM2233BMA	IC	1	<R>
IC6605-09	MC14577CP	IC	5	<R>
IC6610	MN1280P	IC	1	<R>
IC6611	M50455-001SP	IC	1	<R>
IC6612	TC4S584F	IC	1	<R>
IC6613	NJM2233BMA	IC	1	<R>
IC6614	MC74HC4053F	IC	1	<R>
IC6615	TC7S08F	IC	1	<R>
IC6616	MC74HC4053F	IC	1	<R>
L6601-07	VLQEL05K101J	COIL	7	
L6608	VLQEL05K330J	COIL	1	
L6609,10	VLQEL05K470J	COIL	2	
L6611	VLQEL05K150J	COIL	1	
L6612	VLQEL05K101J	COIL	1	
P4006	VJP3490B13	CONNECTOR	1	
P4007,08	VJP3092	CONNECTOR (MALE)	2	
P4009	VJP3490B13	CONNECTOR	1	
P6601	VJS1490	CONNECTOR (FEMALE)	1	
P6602,03	VJP3490B13	CONNECTOR	2	
P6604	VJS1468	CONNECTOR (FEMALE)	1	
P6605	VJS1490	CONNECTOR (FEMALE)	1	
P6606	VJP3076	CONNECTOR	1	
P6607	VJP1243T	CONNECTOR (MALE) 3P	1	
P6608	VJS1488	CONNECTOR (FEMALE)	1	
Q4001-08	MSD601-R	TRANSISTOR	8	<R>
Q4010	2SD601-R	TRANSISTOR	1	<R>
Q4011	2SB710-R	TRANSISTOR	1	<R>
Q4015-17	2SD1306	TRANSISTOR	3	<R>
Q4021-23	2SD1306	TRANSISTOR	3	<R>
Q4027-29	2SD1306	TRANSISTOR	3	<R>
Q4033-35	2SD1306	TRANSISTOR	3	<R>
Q4036	MSB710-R	TRANSISTOR	1	<R>
Q4037	2SB710-R	TRANSISTOR	1	<R>
Q4038	2SD602-R	TRANSISTOR	1	<R>
Q6602,03	MSD601-R	TRANSISTOR	2	<R>
Q6606	MSB709-R	TRANSISTOR	1	<R>
Q6609,10	XN4501	TRANSISTOR-RESISTOR	2	<R>
Q6611	MSD601-R	TRANSISTOR	1	<R>
Q6612	XN4401	TRANSISTOR-RESISTOR	1	<R>
Q6613-16	MSB709-R	TRANSISTOR	4	<R>
Q6617	MSD601-R	TRANSISTOR	1	<R>

Ref.No.	Part No.	Part Name & Description	Pcs	Remarks
QR6603	MRN1404	TRANSISTOR	1	<R>
QR6605	MRN2404	TRANSISTOR	1	<R>
QR6606-09	MRN1404	TRANSISTOR	4	<R>
QR6610,11	MRN2404	TRANSISTOR	2	<R>
R4001	ERJ6GEYJ681	M.RESISTOR CH 1/10W 680	1	
R4002,03	ERJ6GEYJ473	M.RESISTOR CH 1/10W 47K	2	
R4004,05	ERJ6GEYJ822	M.RESISTOR CH 1/10W 8.2K	2	
R4006,07	ERJ6GEYJ104	M.RESISTOR CH 1/10W 100K	2	
R4008	VRE0034E332	M.RESISTOR CH 1/10W 3.3K	1	
R4009-14	VRE0034E472	M.RESISTOR CH 1/10W 4.7K	6	
R4015	ERJ6GEYJ473	M.RESISTOR CH 1/10W 47K	1	
R4016	ERJ6GEYJ681	M.RESISTOR CH 1/10W 680	1	
R4017	ERJ6GEYJ473	M.RESISTOR CH 1/10W 47K	1	
R4018,19	ERJ6GEYJ822	M.RESISTOR CH 1/10W 8.2K	2	
R4020,21	ERJ6GEYJ104	M.RESISTOR CH 1/10W 100K	2	
R4022	VRE0034E332	M.RESISTOR CH 1/10W 3.3K	1	
R4023-28	VRE0034E472	M.RESISTOR CH 1/10W 4.7K	6	
R4029	ERJ6GEYJ103	M.RESISTOR CH 1/10W 10K	1	
R4030	ERJ6GEYJ183	M.RESISTOR CH 1/10W 18K	1	
R4032-35	ERJ6GEYJ103	M.RESISTOR CH 1/10W 10K	4	
R4036	ERJ6GEYJ183	M.RESISTOR CH 1/10W 18K	1	
R4038-40	ERJ6GEYJ103	M.RESISTOR CH 1/10W 10K	3	
R4041	ERJ6GEYJ681	M.RESISTOR CH 1/10W 680	1	
R4042,43	ERJ6GEYJ473	M.RESISTOR CH 1/10W 47K	2	
R4044,45	ERJ6GEYJ822	M.RESISTOR CH 1/10W 8.2K	2	
R4046,47	ERJ6GEYJ104	M.RESISTOR CH 1/10W 100K	2	
R4048	VRE0034E332	M.RESISTOR CH 1/10W 3.3K	1	
R4049-54	VRE0034E472	M.RESISTOR CH 1/10W 4.7K	6	
R4055	ERJ6GEYJ681	M.RESISTOR CH 1/10W 680	1	
R4056,57	ERJ6GEYJ473	M.RESISTOR CH 1/10W 47K	2	
R4058,59	ERJ6GEYJ822	M.RESISTOR CH 1/10W 8.2K	2	
R4060,61	ERJ6GEYJ104	M.RESISTOR CH 1/10W 100K	2	
R4062	VRE0034E332	M.RESISTOR CH 1/10W 3.3K	1	
R4063-68	VRE0034E472	M.RESISTOR CH 1/10W 4.7K	6	
R4069	ERJ6GEYJ103	M.RESISTOR CH 1/10W 10K	1	
R4070	ERJ6GEYJ183	M.RESISTOR CH 1/10W 18K	1	
R4072-76	ERJ6GEYJ103	M.RESISTOR CH 1/10W 10K	5	
R4077	ERJ6GEYJ183	M.RESISTOR CH 1/10W 18K	1	
R4079-82	ERJ6GEYJ103	M.RESISTOR CH 1/10W 10K	4	
R4094,95	ERJ6GEYJ103	M.RESISTOR CH 1/10W 10K	2	
R4096,97	ERJ6GEYJ151	M.RESISTOR CH 1/10W 150	2	
R4107	ERJ6GEYJ332	M.RESISTOR CH 1/10W 3.3K	1	
R4108	ERJ6GEYJ473	M.RESISTOR CH 1/10W 47K	1	
R4109	ERJ6GEYJ332	M.RESISTOR CH 1/10W 3.3K	1	
R4110	ERJ6GEYJ822	M.RESISTOR CH 1/10W 8.2K	1	
R4111	ERJ6GEYG912	M.RESISTOR CH 1/10W 9.1K	1	
R4112	ERJ6GEYJ470	M.RESISTOR CH 1/10W 47	1	
R4113,14	ERJ6GEYJ332	M.RESISTOR CH 1/10W 3.3K	2	
R4115	ERJ6GEYJ822	M.RESISTOR CH 1/10W 8.2K	1	
R4116	ERJ6GEYJ562	M.RESISTOR CH 1/10W 5.6K	1	
R4117	ERJ6GEYJ102	M.RESISTOR CH 1/10W 1K	1	
R4118	ERJ6GEYJ470	M.RESISTOR CH 1/10W 47	1	
R4119-23	ERJ6GEYJ103	M.RESISTOR CH 1/10W 10K	5	
R4133	ERJ6GEYJ473	M.RESISTOR CH 1/10W 47K	1	
R4134,35	ERJ6GEYJ332	M.RESISTOR CH 1/10W 3.3K	2	
R4136	ERJ6GEYJ822	M.RESISTOR CH 1/10W 8.2K	1	
R4137	ERJ6GEYJ470	M.RESISTOR CH 1/10W 47	1	
R4138	ERJ6GEYG912	M.RESISTOR CH 1/10W 9.1K	1	
R4139,40	ERJ6GEYJ332	M.RESISTOR CH 1/10W 3.3K	2	
R4141	ERJ6GEYJ822	M.RESISTOR CH 1/10W 8.2K	1	
R4142	ERJ6GEYJ562	M.RESISTOR CH 1/10W 5.6K	1	
R4143	ERJ6GEYJ102	M.RESISTOR CH 1/10W 1K	1	
R4144	ERJ6GEYJ470	M.RESISTOR CH 1/10W 47	1	
R4145-49	ERJ6GEYJ103	M.RESISTOR CH 1/10W 10K	5	
R4159	ERJ6GEYJ473	M.RESISTOR CH 1/10W 47K	1	
R4160,61	ERJ6GEYJ332	M.RESISTOR CH 1/10W 3.3K	2	
R4162	ERJ6GEYJ822	M.RESISTOR CH 1/10W 8.2K	1	
R4163	ERJ6GEYJ470	M.RESISTOR CH 1/10W 47	1	
R4164,65	ERJ6GEYJ332	M.RESISTOR CH 1/10W 3.3K	2	
R4166	ERJ6GEYJ562	M.RESISTOR CH 1/10W 5.6K	1	

Ref.No.	Part No.	Part Name & Description	Pcs	Remarks
R4167	ERJ6GEYJ102	M.RESISTOR CH 1/10W 1K	1	
R4168	ERJ6GEYJ103	M.RESISTOR CH 1/10W 10K	1	
R4169	ERJ6GEYJ822	M.RESISTOR CH 1/10W 8.2K	1	
R4170	ERJ6GEYJ470	M.RESISTOR CH 1/10W 47	1	
R4171	ERJ6GEYJ103	M.RESISTOR CH 1/10W 10K	1	
R4172	ERJ6GEYG912	M.RESISTOR CH 1/10W 9.1K	1	
R4173-75	ERJ6GEYJ103	M.RESISTOR CH 1/10W 10K	3	
R4185	ERJ6GEYJ473	M.RESISTOR CH 1/10W 47K	1	
R4186,87	ERJ6GEYJ332	M.RESISTOR CH 1/10W 3.3K	2	
R4188	ERJ6GEYJ822	M.RESISTOR CH 1/10W 8.2K	1	
R4189	ERJ6GEYG912	M.RESISTOR CH 1/10W 9.1K	1	
R4190	ERJ6GEYJ470	M.RESISTOR CH 1/10W 47	1	
R4191,92	ERJ6GEYJ332	M.RESISTOR CH 1/10W 3.3K	2	
R4193	ERJ6GEYJ822	M.RESISTOR CH 1/10W 8.2K	1	
R4194	ERJ6GEYJ562	M.RESISTOR CH 1/10W 5.6K	1	
R4195	ERJ6GEYJ102	M.RESISTOR CH 1/10W 1K	1	
R4196	ERJ6GEYJ470	M.RESISTOR CH 1/10W 47	1	
R4197-01	ERJ6GEYJ103	M.RESISTOR CH 1/10W 10K	5	
R4204	ERJ6GEYJ104	M.RESISTOR CH 1/10W 100K	1	
R4205	ERJ6GEYJ563	M.RESISTOR CH 1/10W 56K	1	
R4206,07	ERJ6GEYJ151	M.RESISTOR CH 1/10W 150	2	
R4208-11	ERJ6GEYJ562	M.RESISTOR CH 1/10W 5.6K	4	
R6601	ERJ6GEYJ332	M.RESISTOR CH 1/10W 3.3K	1	
R6602	ERJ6GEYJ470	M.RESISTOR CH 1/10W 47	1	
R6604	ERJ6GEYG750	M.RESISTOR CH 1/10W 75	1	
R6607	ERJ6GEYJ470	M.RESISTOR CH 1/10W 47	1	
R6608	ERJ6GEYJ102	M.RESISTOR CH 1/10W 1K	1	
R6609	ERJ6GEYG472	M.RESISTOR CH 1/10W 4.7K	1	
R6610	ERJ6GEYJ272	M.RESISTOR CH 1/10W 2.7K	1	
R6618	ERJ6GEYJ221	M.RESISTOR CH 1/10W 220	1	
R6619	ERJ6GEYJ102	M.RESISTOR CH 1/10W 1K	1	
R6620	ERJ6GEYJ470	M.RESISTOR CH 1/10W 47	1	
R6621,22	VRE0034E102	M.RESISTOR CH 1/10W 1K	2	
R6623	ERJ6GEYJ104	M.RESISTOR CH 1/10W 100K	1	
R6624-26	ERJ6GEYJ103	M.RESISTOR CH 1/10W 10K	3	
R6628-31	VRE0034E471	M.RESISTOR CH 1/10W 470	4	
R6632,33	ERJ6GEYJ103	M.RESISTOR CH 1/10W 10K	2	
R6634-37	VRE0034E471	M.RESISTOR CH 1/10W 470	4	
R6639-48	VRE0034E471	M.RESISTOR CH 1/10W 470	10	
R6649	ERJ6GEYJ152	M.RESISTOR CH 1/10W 1.5K	1	
R6650	ERJ6GEYJ474	M.RESISTOR CH 1/10W 470K	1	
R6651	ERJ6GEY0R00	M.RESISTOR CH 1/10W 0	1	
R6652	ERJ6GEYJ104	M.RESISTOR CH 1/10W 100K	1	
R6653	ERJ6GEYJ562	M.RESISTOR CH 1/10W 5.6K	1	
R6654,55	ERJ6GEYJ152	M.RESISTOR CH 1/10W 1.5K	2	
R6656	ERJ6GEYJ271	M.RESISTOR CH 1/10W 270	1	
R6657	ERJ6GEYJ102	M.RESISTOR CH 1/10W 1K	1	
R6658	ERJ6GEYJ681	M.RESISTOR CH 1/10W 680	1	
R6659	ERJ6GEYJ272	M.RESISTOR CH 1/10W 2.7K	1	
R6660	ERJ6GEYJ391	M.RESISTOR CH 1/10W 390	1	
R6662	ERJ6GEYJ471	M.RESISTOR CH 1/10W 470	1	
R6663	ERJ6GEYJ222	M.RESISTOR CH 1/10W 2.2K	1	
R6664	ERJ6GEYJ272	M.RESISTOR CH 1/10W 2.7K	1	
R6665	ERJ6GEYJ182	M.RESISTOR CH 1/10W 1.8K	1	
R6666	ERJ6GEYJ332	M.RESISTOR CH 1/10W 3.3K	1	
R6667	ERJ6GEYJ223	M.RESISTOR CH 1/10W 22K	1	
R6668	ERJ6GEYJ103	M.RESISTOR CH 1/10W 10K	1	
R6669	ERJ6GEYJ124	M.RESISTOR CH 1/10W 120K	1	
R6670	ERJ6GEYJ102	M.RESISTOR CH 1/10W 1K	1	
R6671	ERJ6GEYJ221	M.RESISTOR CH 1/10W 220	1	
R6672	ERJ6GEYJ103	M.RESISTOR CH 1/10W 10K	1	
R6673	ERJ6GEYJ561	M.RESISTOR CH 1/10W 560	1	
R6675	ERJ6GEYJ332	M.RESISTOR CH 1/10W 3.3K	1	
R6677,78	VRE0034E471	M.RESISTOR CH 1/10W 470	2	
R6679,80	ERJ6GEYJ103	M.RESISTOR CH 1/10W 10K	2	
R6681	ERJ6GEYJ152	M.RESISTOR CH 1/10W 1.5K	1	
R6683	ERJ6GEYJ104	M.RESISTOR CH 1/10W 100K	1	
R6684	ERJ6GEYJ103	M.RESISTOR CH 1/10W 10K	1	
R6685	ERJ6GEYJ152	M.RESISTOR CH 1/10W 1.5K	1	
R6686,87	ERJ6GEYJ330	M.RESISTOR CH 1/10W 33	2	
R6689	ERJ6GEYJ152	M.RESISTOR CH 1/10W 1.5K	1	
R6690	ERJ6GEYJ102	M.RESISTOR CH 1/10W 1K	1	
R6691	ERJ6GEYJ152	M.RESISTOR CH 1/10W 1.5K	1	
R6694	ERJ6GEYJ104	M.RESISTOR CH 1/10W 100K	1	
R6695	ERJ6GEYJ331	M.RESISTOR CH 1/10W 330	1	

Ref.No.	Part No.	Part Name & Description	Pcs	Remarks
R6698	ERJ6GEY0R00	M.RESISTOR CH 1/10W 0	1	
SW4004,05	VSS0208	SWITCH	2	<R>
VR4005-08	EVN32CA00B53	V.RESISTOR 5K	4	
X6601	VSX0316	CRYSTAL OSCILLATOR	1	<R>

Ref.No.		Part No.	Part Name & Description	Pcs	Remarks
		VEP06908F	P.C.BOARD W/COMPONENT		AG-8600E
			REAR AMP		
C4016		ECEA1CKS470	E.CAPACITOR 16V 47U	1	
C4017		ECEA1CKS101	E.CAPACITOR 16V 100U	1	
C4018		ECEA1CKA470	E.CAPACITOR 16V 47U	1	
C4019		ECEA1CKA101	E.CAPACITOR 16V 100U	1	
C4020		ECEA1CSN100	E.CAPACITOR 16V 10U	1	
C4021		ECEA1EKA470	E.CAPACITOR 25V 47U	1	
C4022		ECEA1VKS470	E.CAPACITOR 50V 47U	1	
C4023		ECEA1CSN100	E.CAPACITOR 16V 10U	1	
C4024,25		ECEA1EKA470	E.CAPACITOR 25V 47U	2	
C4026		ECEA1CSN100	E.CAPACITOR 16V 10U	1	
C4027,28		ECEA1EKA470	E.CAPACITOR 25V 47U	2	
C4029		ECEA1CSN100	E.CAPACITOR 16V 10U	1	
C4030,31		ECEA1EKA470	E.CAPACITOR 25V 47U	2	
C4034		ECEA1CKS101	E.CAPACITOR 16V 100U	1	
C4035		ECEA1CKA220	E.CAPACITOR 16V 22U	1	
C4036-41		ECEA1CKA100	E.CAPACITOR 16V 10U	6	
C4042,43		ECEA1CKS100	E.CAPACITOR 16V 10U	2	
C6611		ECUM1H103ZFN	C.CAPACITOR 50V 0.01U	1	
C6612		ECEA0JKS470	E.CAPACITOR 6.3V 47U	1	
C6613		ECUM1H103ZFN	C.CAPACITOR 50V 0.01U	1	
C6614		ECEA0JKS470	E.CAPACITOR 6.3V 47U	1	
C6615		ECUM1H103ZFN	C.CAPACITOR 50V 0.01U	1	
C6616		ECEA1CKA470	E.CAPACITOR 16V 47U	1	
C6621,22		ECUM1H103ZFN	C.CAPACITOR 50V 0.01U	2	
C6623		ECEA0JKS470	E.CAPACITOR 6.3V 47U	1	
C6624		ECEA0JKA470	E.CAPACITOR 6.3V 47U	1	
C6628-36		ECUM1E104ZFN	C.CAPACITOR CH 25V 0.1U	9	
C6637-39		ECEA0JKN470	E.CAPACITOR 6.3V 47U	3	
C6640		ECUM1E104ZFN	C.CAPACITOR CH 25V 0.1U	1	
C6641		ECEA0JKA470	E.CAPACITOR 6.3V 47U	1	
C6642		ECUM1H103ZFN	C.CAPACITOR 50V 0.01U	1	
C6643		ECEA1HKS4R7	E.CAPACITOR 50V 4.7U	1	
C6644		ECEA0JKA470	E.CAPACITOR 6.3V 47U	1	
C6645		ECUM1H103ZFN	C.CAPACITOR 50V 0.01U	1	
C6646		ECEA0JKA470	E.CAPACITOR 6.3V 47U	1	
C6647		ECEA0JKS470	E.CAPACITOR 6.3V 47U	1	
C6648		ECUM1H103ZFN	C.CAPACITOR 50V 0.01U	1	
C6649		ECEA0JKA470	E.CAPACITOR 6.3V 47U	1	
C6650		ECEA1HKAR22	E.CAPACITOR 50V 0.22U	1	
C6651		ECUM1H150JCN	C.CAPACITOR CH 50V 15P	1	
C6652		ECUM1H270JCN	C.CAPACITOR CH 50V 27P	1	
C6653,54		ECUM1H220JCN	C.CAPACITOR CH 50V 22P	2	
C6655,56		ECUM1H390JCN	C.CAPACITOR CH 50V 39P	2	
C6657		ECUM1H103ZFN	C.CAPACITOR 50V 0.01U	1	
C6658		ECEA0JKS470	E.CAPACITOR 6.3V 47U	1	
C6659		ECUM1H103ZFN	C.CAPACITOR 50V 0.01U	1	
C6660		ECEA0JKA470	E.CAPACITOR 6.3V 47U	1	
C6661		ECUM1H102KBN	C.CAPACITOR CH 50V 1000P	1	
C6662-64		ECUM1E104ZFN	C.CAPACITOR CH 25V 0.1U	3	
C6667,68		ECUM1H270JCN	C.CAPACITOR CH 50V 27P	2	
C6670,71		ECUM1H270JCN	C.CAPACITOR CH 50V 27P	2	
C6674		ECUM1H270JCN	C.CAPACITOR CH 50V 27P	1	
C6676-78		ECUM1E104ZFN	C.CAPACITOR CH 25V 0.1U	3	
C6679		ECCF1H121JC	C.CAPACITOR 50V 120P	1	
CT6601		ECV1ZW20X60	V.CAPACITOR 20P	1	
D4017		MA153A	DIODE	1	<R>
D6601		MA151K	DIODE	1	<R>
D6603		MA28W-AB	DIODE	1	<R>
IC4014-17		NJM4556MB	IC	4	<R>
IC6605-09		MC14577CP	IC	5	<R>

Ref.No.		Part No.	Part Name & Description	Pcs	Remarks
IC6610		MN1280P	IC	1	<R>
IC6611		M50455-001SP	IC	1	<R>
IC6612		TC4S584F	IC	1	<R>
IC6614		MC74HC4053F	IC	1	<R>
IC6615		TC7S08F	IC	1	<R>
IC6616		MC74HC4053F	IC	1	<R>
L6601-07		VLQEL05K101J	COIL	7	
L6608		VLQEL05K330J	COIL	1	
L6609,10		VLQEL05K470J	COIL	2	
L6611		VLQEL05K150J	COIL	1	
L6612		VLQEL05K101J	COIL	1	
P4006		VJP3490B13	CONNECTOR	1	
P4007		VJP3092	CONNECTOR (MALE)	1	
P4009		VJP3490B13	CONNECTOR	1	
P6601		VJS1490	CONNECTOR (FEMALE)	1	
P6602,03		VJP3490B13	CONNECTOR	2	
P6605		VJS1490	CONNECTOR (FEMALE)	1	
P6606		VJP3076	CONNECTOR	1	
P6607		VJP1243T	CONNECTOR (MALE) 3P	1	
P6608		VJS1488	CONNECTOR (FEMALE)	1	
Q4010		2SD601-R	TRANSISTOR	1	<R>
Q4011		2SB710-R	TRANSISTOR	1	<R>
Q4015-17		2SD1306	TRANSISTOR	3	<R>
Q4021-23		2SD1306	TRANSISTOR	3	<R>
Q4027-29		2SD1306	TRANSISTOR	3	<R>
Q4033-35		2SD1306	TRANSISTOR	3	<R>
Q4036		MSB710-R	TRANSISTOR	1	<R>
Q6606		MSB709-R	TRANSISTOR	1	<R>
Q6609,10		XN4501	TRANSISTOR-RESISTOR	2	<R>
Q6611		MSD601-R	TRANSISTOR	1	<R>
Q6612		XN4401	TRANSISTOR-RESISTOR	1	<R>
Q6614-16		MSB709-R	TRANSISTOR	3	<R>
Q6617		MSD601-R	TRANSISTOR	1	<R>
QR6605		MRN2404	TRANSISTOR	1	<R>
QR6606-09		MRN1404	TRANSISTOR	4	<R>
QR6610,11		MRN2404	TRANSISTOR	2	<R>
R4096,97		ERJ6GEYJ151	M.RESISTOR CH 1/10W 150	2	
R4107		ERJ6GEYJ332	M.RESISTOR CH 1/10W 3.3K	1	
R4108		ERJ6GEYJ473	M.RESISTOR CH 1/10W 47K	1	
R4109		ERJ6GEYJ332	M.RESISTOR CH 1/10W 3.3K	1	
R4110		ERJ6GEYJ822	M.RESISTOR CH 1/10W 8.2K	1	
R4111		ERJ6GEYG912	M.RESISTOR CH 1/10W 9.1K	1	
R4112		ERJ6GEYJ470	M.RESISTOR CH 1/10W 47	1	
R4113,14		ERJ6GEYJ332	M.RESISTOR CH 1/10W 3.3K	2	
R4115		ERJ6GEYJ822	M.RESISTOR CH 1/10W 8.2K	1	
R4116		ERJ6GEYJ562	M.RESISTOR CH 1/10W 5.6K	1	
R4117		ERJ6GEYJ102	M.RESISTOR CH 1/10W 1K	1	
R4118		ERJ6GEYJ470	M.RESISTOR CH 1/10W 47	1	
R4119-23		ERJ6GEYJ103	M.RESISTOR CH 1/10W 10K	5	
R4133		ERJ6GEYJ473	M.RESISTOR CH 1/10W 47K	1	
R4134,35		ERJ6GEYJ332	M.RESISTOR CH 1/10W 3.3K	2	
R4136		ERJ6GEYJ822	M.RESISTOR CH 1/10W 8.2K	1	
R4137		ERJ6GEYJ470	M.RESISTOR CH 1/10W 47	1	
R4138		ERJ6GEYG912	M.RESISTOR CH 1/10W 9.1K	1	
R4139,40		ERJ6GEYJ332	M.RESISTOR CH 1/10W 3.3K	2	
R4141		ERJ6GEYJ822	M.RESISTOR CH 1/10W 8.2K	1	
R4142		ERJ6GEYJ562	M.RESISTOR CH 1/10W 5.6K	1	
R4143		ERJ6GEYJ102	M.RESISTOR CH 1/10W 1K	1	
R4144		ERJ6GEYJ470	M.RESISTOR CH 1/10W 47	1	
R4145-49		ERJ6GEYJ103	M.RESISTOR CH 1/10W 10K	5	

Ref.No.		Part No.	Part Name & Description	Pcs	Remarks
R4159		ERJ6GEYJ473	M.RESISTOR CH 1/10W 47K	1	
R4160,61		ERJ6GEYJ332	M.RESISTOR CH 1/10W 3.3K	2	
R4162		ERJ6GEYJ822	M.RESISTOR CH 1/10W 8.2K	1	
R4163		ERJ6GEYJ470	M.RESISTOR CH 1/10W 47	1	
R4164,65		ERJ6GEYJ332	M.RESISTOR CH 1/10W 3.3K	2	
R4166		ERJ6GEYJ562	M.RESISTOR CH 1/10W 5.6K	1	
R4167		ERJ6GEYJ102	M.RESISTOR CH 1/10W 1K	1	
R4168		ERJ6GEYJ103	M.RESISTOR CH 1/10W 10K	1	
R4169		ERJ6GEYJ822	M.RESISTOR CH 1/10W 8.2K	1	
R4170		ERJ6GEYJ470	M.RESISTOR CH 1/10W 47	1	
R4171		ERJ6GEYJ103	M.RESISTOR CH 1/10W 10K	1	
R4172		ERJ6GEYG912	M.RESISTOR CH 1/10W 9.1K	1	
R4173-75		ERJ6GEYJ103	M.RESISTOR CH 1/10W 10K	3	
R4185		ERJ6GEYJ473	M.RESISTOR CH 1/10W 47K	1	
R4186,87		ERJ6GEYJ332	M.RESISTOR CH 1/10W 3.3K	2	
R4188		ERJ6GEYJ822	M.RESISTOR CH 1/10W 8.2K	1	
R4189		ERJ6GEYG912	M.RESISTOR CH 1/10W 9.1K	1	
R4190		ERJ6GEYJ470	M.RESISTOR CH 1/10W 47	1	
R4191,92		ERJ6GEYJ332	M.RESISTOR CH 1/10W 3.3K	2	
R4193		ERJ6GEYJ822	M.RESISTOR CH 1/10W 8.2K	1	
R4194		ERJ6GEYJ562	M.RESISTOR CH 1/10W 5.6K	1	
R4195		ERJ6GEYJ102	M.RESISTOR CH 1/10W 1K	1	
R4196		ERJ6GEYJ470	M.RESISTOR CH 1/10W 47	1	
R4197-01		ERJ6GEYJ103	M.RESISTOR CH 1/10W 10K	5	
R4204		ERJ6GEYJ104	M.RESISTOR CH 1/10W 100K	1	
R4205		ERJ6GEYJ563	M.RESISTOR CH 1/10W 56K	1	
R6618		ERJ6GEYJ221	M.RESISTOR CH 1/10W 220	1	
R6619		ERJ6GEYJ102	M.RESISTOR CH 1/10W 1K	1	
R6620		ERJ6GEYJ470	M.RESISTOR CH 1/10W 47	1	
R6621,22		VRE0034E102	M.RESISTOR CH 1/10W 1K	2	
R6623		ERJ6GEYJ104	M.RESISTOR CH 1/10W 100K	1	
R6624-26		ERJ6GEYJ103	M.RESISTOR CH 1/10W 10K	3	
R6628-31		VRE0034E471	M.RESISTOR CH 1/10W 470	4	
R6632,33		ERJ6GEYJ103	M.RESISTOR CH 1/10W 10K	2	
R6634-37		VRE0034E471	M.RESISTOR CH 1/10W 470	4	
R6639-48		VRE0034E471	M.RESISTOR CH 1/10W 470	10	
R6649		ERJ6GEYJ152	M.RESISTOR CH 1/10W 1.5K	1	
R6650		ERJ6GEYJ474	M.RESISTOR CH 1/10W 470K	1	
R6651		ERJ6GEY0R00	M.RESISTOR CH 1/10W 0	1	
R6652		ERJ6GEYJ104	M.RESISTOR CH 1/10W 100K	1	
R6653		ERJ6GEYJ562	M.RESISTOR CH 1/10W 5.6K	1	
R6654,55		ERJ6GEYJ152	M.RESISTOR CH 1/10W 1.5K	2	
R6656		ERJ6GEYJ271	M.RESISTOR CH 1/10W 270	1	
R6657		ERJ6GEYJ102	M.RESISTOR CH 1/10W 1K	1	
R6658		ERJ6GEYJ681	M.RESISTOR CH 1/10W 680	1	
R6659		ERJ6GEYJ272	M.RESISTOR CH 1/10W 2.7K	1	
R6660		ERJ6GEYJ391	M.RESISTOR CH 1/10W 390	1	
R6662		ERJ6GEYJ471	M.RESISTOR CH 1/10W 470	1	
R6663		ERJ6GEYJ222	M.RESISTOR CH 1/10W 2.2K	1	
R6664		ERJ6GEYJ272	M.RESISTOR CH 1/10W 2.7K	1	
R6665		ERJ6GEYJ182	M.RESISTOR CH 1/10W 1.8K	1	
R6666		ERJ6GEYJ332	M.RESISTOR CH 1/10W 3.3K	1	
R6667		ERJ6GEYJ223	M.RESISTOR CH 1/10W 22K	1	
R6672		ERJ6GEYJ103	M.RESISTOR CH 1/10W 10K	1	
R6673		ERJ6GEYJ561	M.RESISTOR CH 1/10W 560	1	
R6677,78		VRE0034E471	M.RESISTOR CH 1/10W 470	2	
R6680		ERJ6GEYJ103	M.RESISTOR CH 1/10W 10K	1	
R6681		ERJ6GEYJ152	M.RESISTOR CH 1/10W 1.5K	1	
R6683		ERJ6GEYJ104	M.RESISTOR CH 1/10W 100K	1	
R6684		ERJ6GEYJ103	M.RESISTOR CH 1/10W 10K	1	
R6685		ERJ6GEYJ152	M.RESISTOR CH 1/10W 1.5K	1	
R6686,87		ERJ6GEYJ330	M.RESISTOR CH 1/10W 33	2	
R6689		ERJ6GEYJ152	M.RESISTOR CH 1/10W 1.5K	1	
R6690		ERJ6GEYJ102	M.RESISTOR CH 1/10W 1K	1	
R6691		ERJ6GEYJ152	M.RESISTOR CH 1/10W 1.5K	1	
R6694		ERJ6GEYJ104	M.RESISTOR CH 1/10W 100K	1	
R6695		ERJ6GEYJ331	M.RESISTOR CH 1/10W 330	1	
R6698		ERJ6GEY0R00	M.RESISTOR CH 1/10W 0	1	
VR4005-08		EVN32CA00B53	V.RESISTOR 5K	4	
X6601		VSX0316	CRYSTAL OSCILLATOR	1	<R>

Ref.No.		Part No.	Part Name & Description	Pcs	Remarks
		VEP06909A	P.C.BOARD W/COMPONENT		AG-8700E
			REAR JACK		
J6701-04		VJS3154	CONNECTOR (FEMALE)	4	
J6705		VJS3155	CONNECTOR	1	
J6709		VJP3414A015	CONNECTOR	1	
J6711-13		VJS3154	CONNECTOR (FEMALE)	3	
J6714,15		VJS3155	CONNECTOR	2	
J6716-18		VJS3154	CONNECTOR (FEMALE)	3	
J6719		VJJ0322	RCA PIN JACK	1	
J6720,21		VJS3154	CONNECTOR (FEMALE)	2	
P6701		VJS3215B012	CONNECTOR (FEMALE) 12P	1	
P6702		VJS3215B008	CONNECTOR	1	
P6703		VJS3215B012	CONNECTOR (FEMALE) 12P	1	
P6704		VJS3215B010	CONNECTOR	1	
P6705		VJP3080	CONNECTOR (MALE)	1	
R6701,02		ER0S2CKG75R0	M.RESISTOR 1/4W 75	2	
R6704-06		ER0S2CKG75R0	M.RESISTOR 1/4W 75	3	
R6707		ER0S2CKG68R0	M.RESISTOR 1/4W 68	1	
R6708-14		ER0S2CKG75R0	M.RESISTOR 1/4W 75	7	
R6718,19		ERDS2TJ104	C.RESISTOR 1/4W 100K	2	
SW6701,02		VSS0303	SWITCH	2	<R>
			MISCELLANEOUS		
		VMP4232	CONNECTOR ANGLE	1	
E99		VMX2078	SPACER	3	
		VXQ0102	SCREW	2	
		XTV3+8FFZ	SCREW	2	

Ref.No.	Part No.	Part Name & Description	Pcs	Remarks
	VEP06909B	P.C.BOARD W/COMPONENT		AG-8600E
		REAR JACK		
J6703,04	VJS3154	CONNECTOR (FEMALE)	2	
J6709	VJP3414A015	CONNECTOR	1	
J6711-13	VJS3154	CONNECTOR (FEMALE)	3	
J6714,15	VJS3155	CONNECTOR	2	
J6716-18	VJS3154	CONNECTOR (FEMALE)	3	
J6719	VJJ0322	RCA PIN JACK	1	
J6721	VJS3154	CONNECTOR (FEMALE)	1	
P6701	VJS3215B012	CONNECTOR (FEMALE) 12P	1	
P6703	VJS3215B012	CONNECTOR (FEMALE) 12P	1	
P6704	VJS3215B010	CONNECTOR	1	
P6705	VJP3080	CONNECTOR (MALE)	1	
R6702	EROS2CKG75R0	M.RESISTOR 1/4W 75	1	
R6705,06	EROS2CKG75R0	M.RESISTOR 1/4W 75	2	
R6707	EROS2CKG68R0	M.RESISTOR 1/4W 68	1	
R6708-14	EROS2CKG75R0	M.RESISTOR 1/4W 75	7	
R6719	ERDS2TJ104	C.RESISTOR 1/4W 100K	1	
SW6702	VSS0303	SWITCH	1	<R>
		MISCELLANEOUS		
	VMP4232	CONNECTOR ANGLE	1	
E99	VMX2078	SPACER	3	
	VXQ0102	SCREW	2	
	XTV3+8FFZ	SCREW	2	

Ref.No.	Part No.	Part Name & Description	Pcs	Remarks
	VEK4265	P.C.BOARD W/COMPONENT		
		REV TENSION SENSOR UNIT		
		MISCELLANEOUS		
E156	VMA7987	REV PHOTO HOLDER	1	
E157	ON1108	PHOTO INTERRUPTER	1	<R>
E94	XTV26+4F	SCREW	1	
	VEK4058	P.C.BOARD W/COMPONENT		
		PHOTO TR (R) UNIT		
		MISCELLANEOUS		
E92	VMD0645	PHOTO TR HOLDER	1	
	VEK3578	P.C.BOARD W/COMPONENT		
		PHOTO TR (L) UNIT		
		MISCELLANEOUS		
E91	VMD0645	PHOTO TR HOLDER	1	
	VEK5556	P.C.BOARD W/COMPONENT		
		SEARCH DIAL UNIT		
		MISCELLANEOUS		
E87	VSQ0651	JOG/SHUTTLE UNIT	1	<R>
E88	XTV3+6F	SCREW	2	
E89	XTV3+8J	SCREW	3	
E90	XYE3+EF6	SCREW	1	

MC-Service